Basic equipment

From May 1997

Notes:

For information concerning

- Relay and fuse assignment
- Multi-pin connectors
- Control units and relays
- Earth connections

⇒ Overview of Fitting Locations!

For information concerning

- Fault Finding Programs

⇒ Guided Fault Finding

Protected by copyright. Copying for private or commercial purposes, in part or in whole, is not permitted unless authorised by Volkswagen AG. Volkswagen AG does not guarantee or accept any liability with respect to the correctness of information in this document. Copyright by Volkswagen AG.

satelettronica

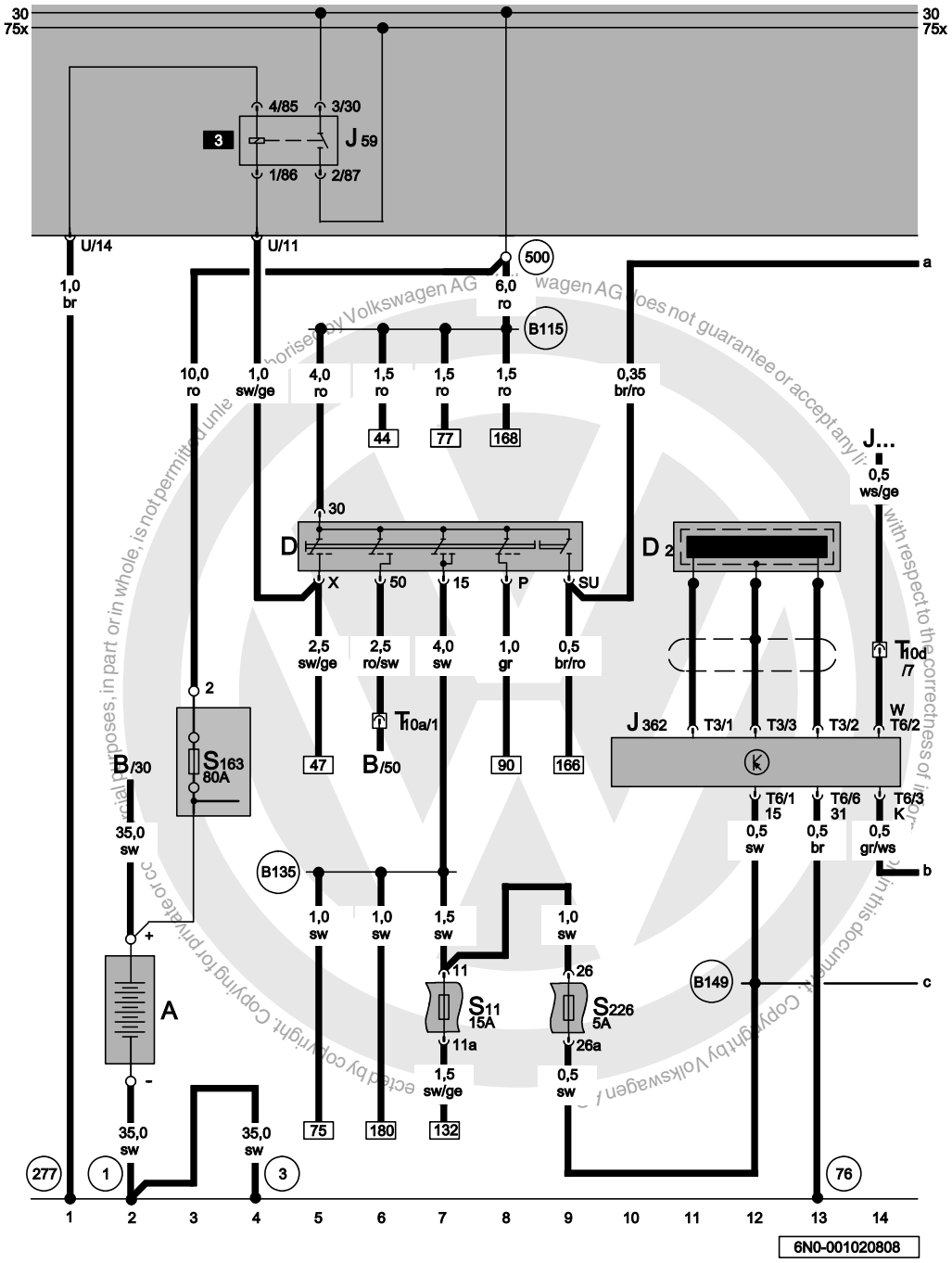

Battery, ignition/starter switch, X-contact relief relay, immobilizer

A	Battery
B	Starter
D	Ignition/starter switch
D2	Immobilizer reader coil (01128)
J...	Injection system control unit, centre on bulkhead
J59	X-contact relief relay
J362	Immobilizer control unit, next to steering column
S11	Fuse on fuse holder
S163	Fuse 2 (30), on battery fuse holder
S226	Fuse on fuse holder
T3	3-pin connector, black, on immobilizer control unit
T6	6-pin connector, black, on immobilizer control unit
T10a	10-pin connector, green, near relay station
T10d	10-pin connector, red, near relay station
1	Earth strap, battery - body
3	Earth strap, engine - body
76	Earth point, near selector mechanism
277	Earth connection 3, in interior wiring harness
500	Screw connection 1 (30), on relay plate
B115	Positive connection, (30, central electrics), in interior wiring harness
B135	Connection (15a), in interior wiring harness
B149	Positive connection 2 (15a), in interior wiring harness

ws	=	white
sw	=	black
ro	=	red
br	=	brown
gn	=	green
bl	=	blue
gr	=	grey
li	=	purple
ge	=	yellow
or	=	orange
rs	=	pink

satelettronica

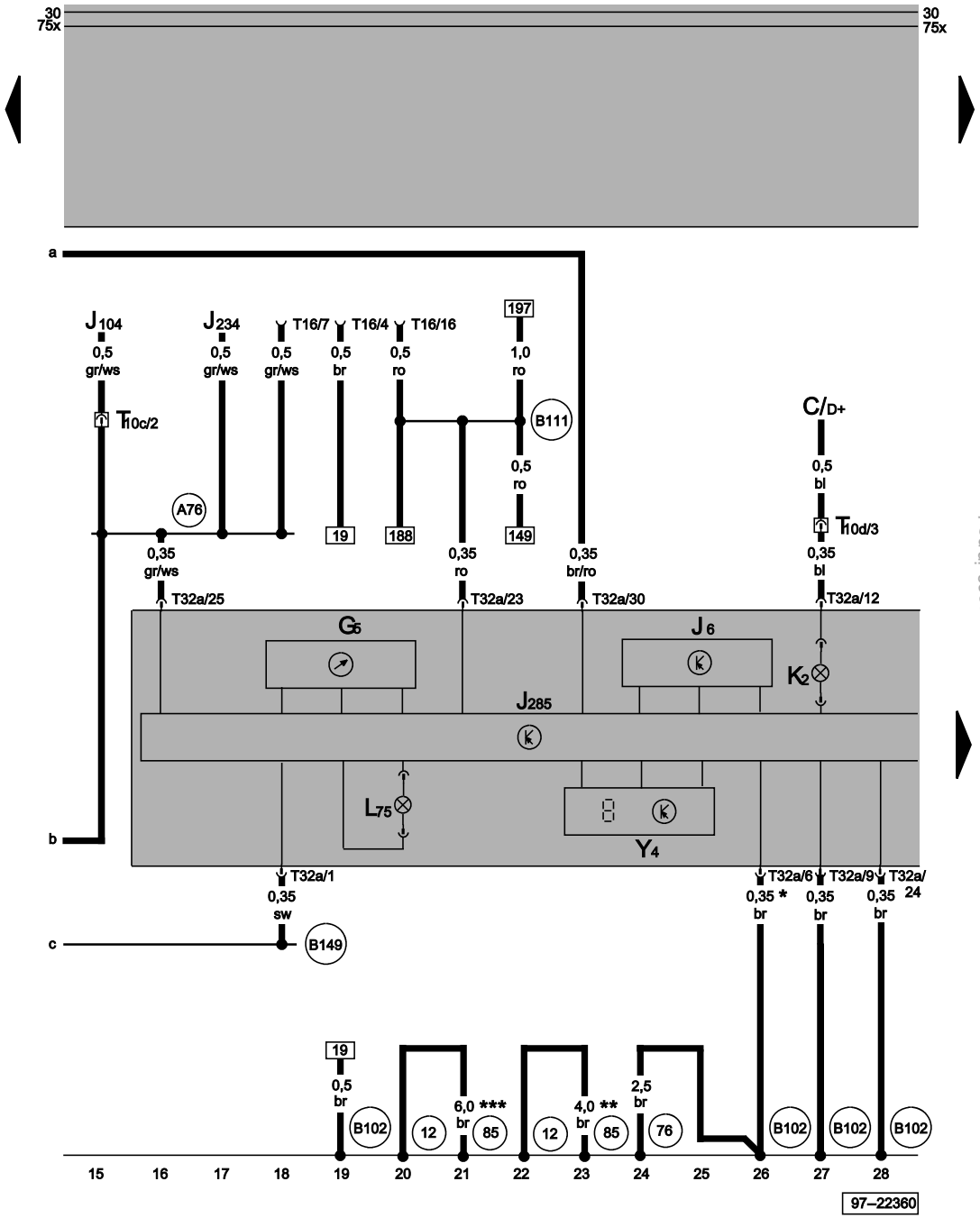

Dash panel insert, rev. counter, self-diagnosis connection, odometer

C	Alternator
G5	Rev. counter (00662)
J6	Voltage stabiliser
J104	ABS control unit, on left in engine compartment
J234	Airbag control unit, behind console
J285	Display control unit in dash panel insert (01317)
K2	Alternator warning lamp
L75	Digital display illumination bulb
T10c	10-pin connector, blue, near relay station
T10d	10-pin connector, red, relay station
T16	16-pin connector, self-diagnosis connector, on right in glove compartment
T32a	32-pin connector, blue
Y4	Trip counter
12	Earth point, on left in engine compartment
76	Earth point, near selector mechanism
85	Earth connection 1, in engine compartment wiring harness
A76	Connection (K-diagnosis wire), in dash panel wiring harness
B102	Earth connection, in front left interior wiring harness
B111	Positive connection 1 (30a), in interior wiring harness
B149	Positive connection 2 (15a), in interior wiring harness
*	Not with airbag
**	Only petrol engine models with manual gearbox
***	Only petrol engine models with automatic gearbox

ws	=	white
sw	=	black
ro	=	red
br	=	brown
gn	=	green
bl	=	blue
gr	=	grey
li	=	purple
ge	=	yellow
or	=	orange
rs	=	pink

Protected by copyright. Copying for private or commercial purposes, in part or in whole, is not permitted unless authorised by Volkswagen AG. Volkswagen AG does not guarantee or accept any liability with respect to the correctness of information in this document. Copyright by Volkswagen AG.
satelettronica

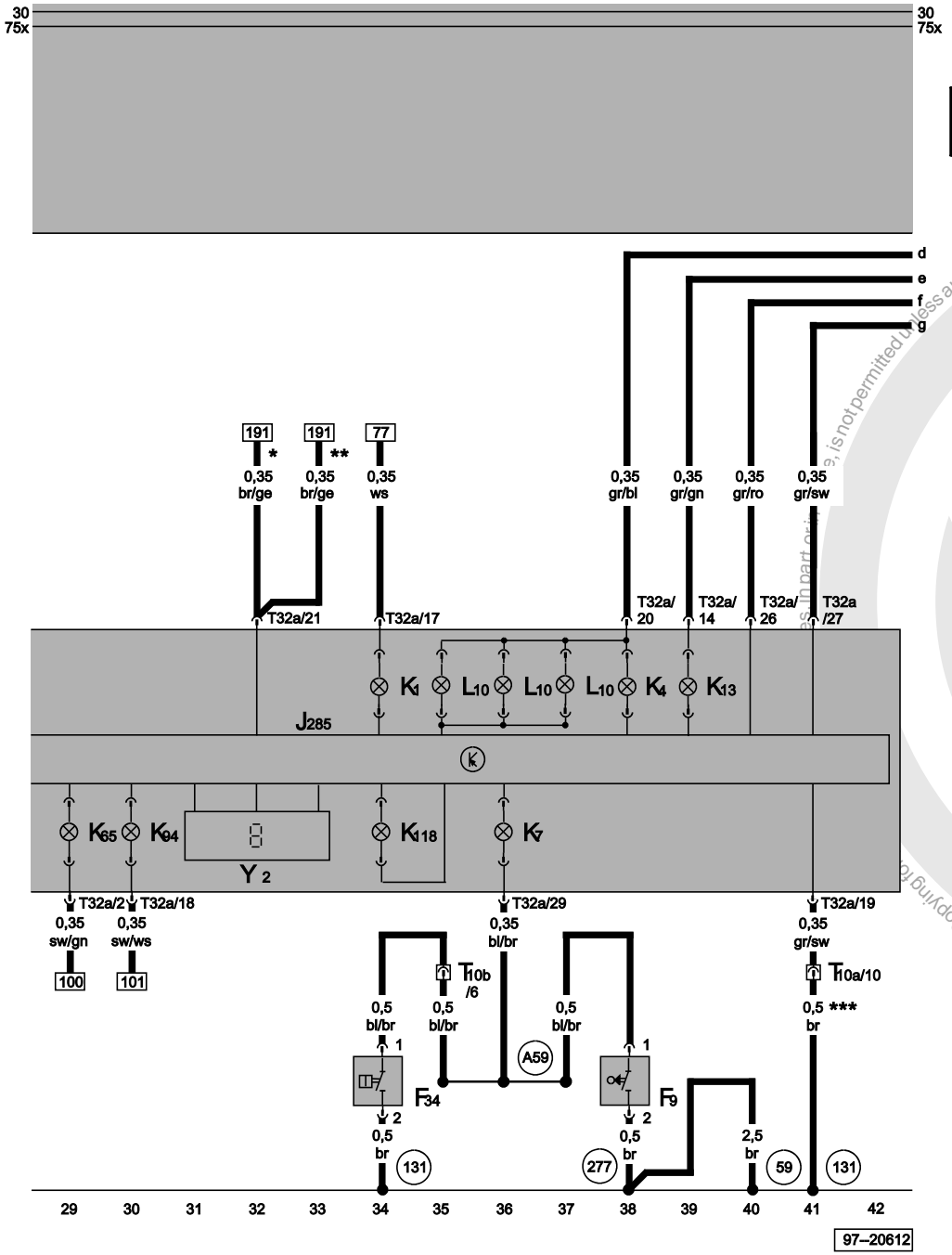

Dash panel insert, digital clock, main beam warning lamp, side light warning lamp, turn signal indicator lamp, handbrake warning, brake fluid level warning contact

F9	Handbrake warning switch (01114)
F34	Brake fluid level warning contact
J285	Display control unit in dash panel insert (01317)
K1	Main beam warning lamp
K4	Side light warning lamp
K7	Dual circuit brakes/handbrake warning lamp (01047)
K13	Rear fog light warning lamp
K65	Left turn signal warning lamp
K94	Right turn signal warning lamp
K118	Brake system warning lamp
L10	Dash panel insert illumination bulb
T10a	10-pin connector, green, near relay station
T10b	10-pin connector, black, near relay station
T32a	32-pin connector, blue
Y2	Digital clock
59	Earth point, near left tail light
131	Earth connection 2, in engine compartment wiring harness
277	Earth connection 3, in interior wiring harness
A59	Connection (sender), in dash panel wiring harness
*	Only models with a petrol engine
**	Only models with a diesel engine
***	Not for ABS

ws	=	white
sw	=	black
ro	=	red
br	=	brown
gn	=	green
bl	=	blue
gr	=	grey
li	=	purple
ge	=	yellow
or	=	orange
rs	=	pink

Protected by copyright. Copying for private or commercial purposes, in part or in whole, is not permitted unless authorised by Volkswagen AG. Volkswagen AG does not guarantee or accept any liability with respect to the correctness of information in this document. Copyright by Volkswagen AG.

satelettronica

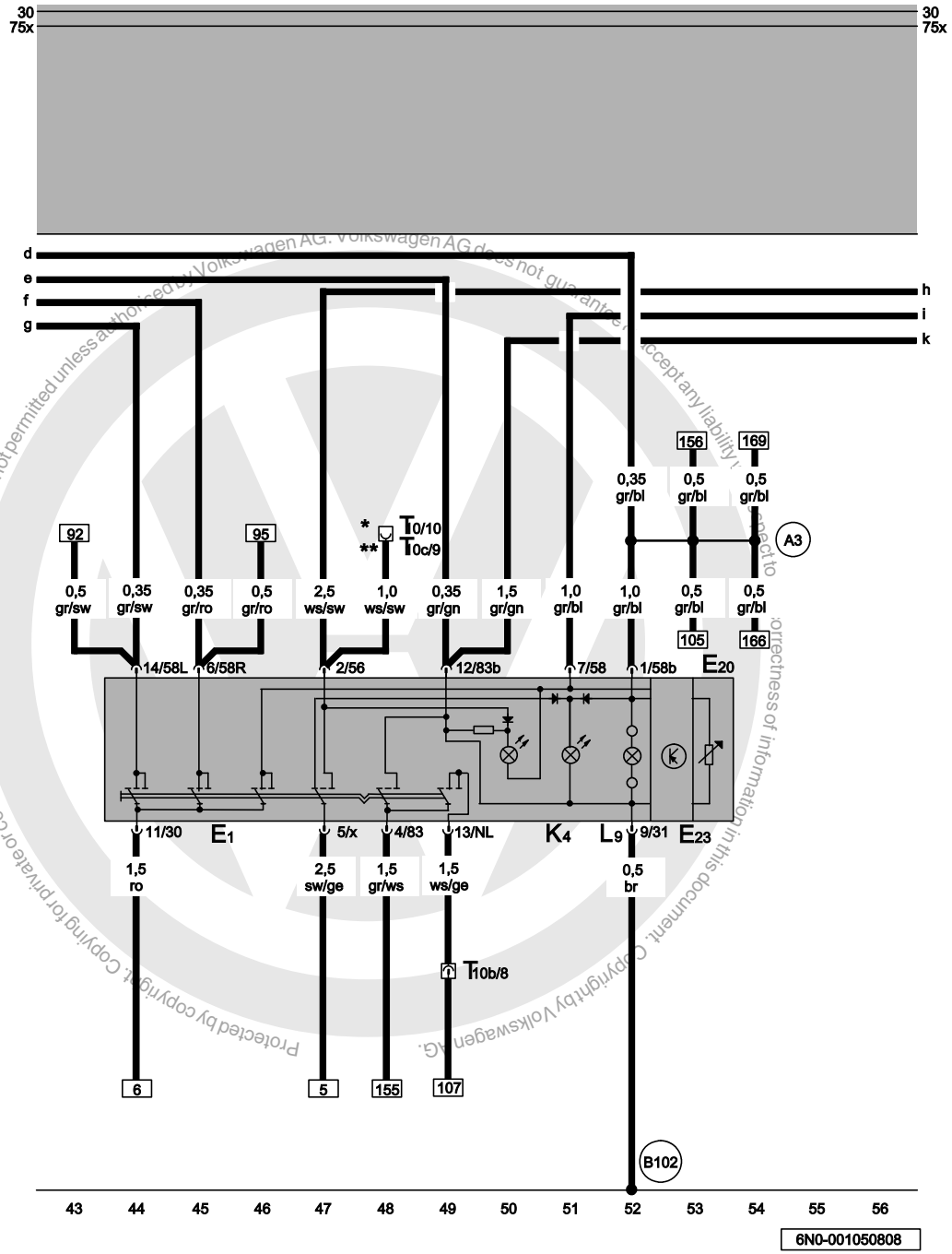

Light switch, switch and instrument illumination regulator

E1	Light switch
E20	Switch and instrument illumination regulator
E23	Front and rear fog light switch
K4	Side light warning lamp
L9	Light switch illumination bulb
T10	10-pin connector, white, near relay station
T10b	10-pin connector, black, near relay station
T10c	10-pin connector, blue, near relay station
A3	Positive connection (58), in dash panel wiring harness
B102	Earth connection, in front left interior wiring harness
*	Only models with a petrol engine
**	Only models with a diesel engine

ws	=	white
sw	=	black
ro	=	red
br	=	brown
gn	=	green
bl	=	blue
gr	=	grey
li	=	purple
ge	=	yellow
or	=	orange
rs	=	pink

Protected by copyright. Copying for private or commercial purposes, in part or in whole, is not permitted unless authorised by Volkswagen AG. Volkswagen AG does not guarantee or accept any liability with respect to the correctness of information in this document. Copyright by Volkswagen AG.

satelettronica

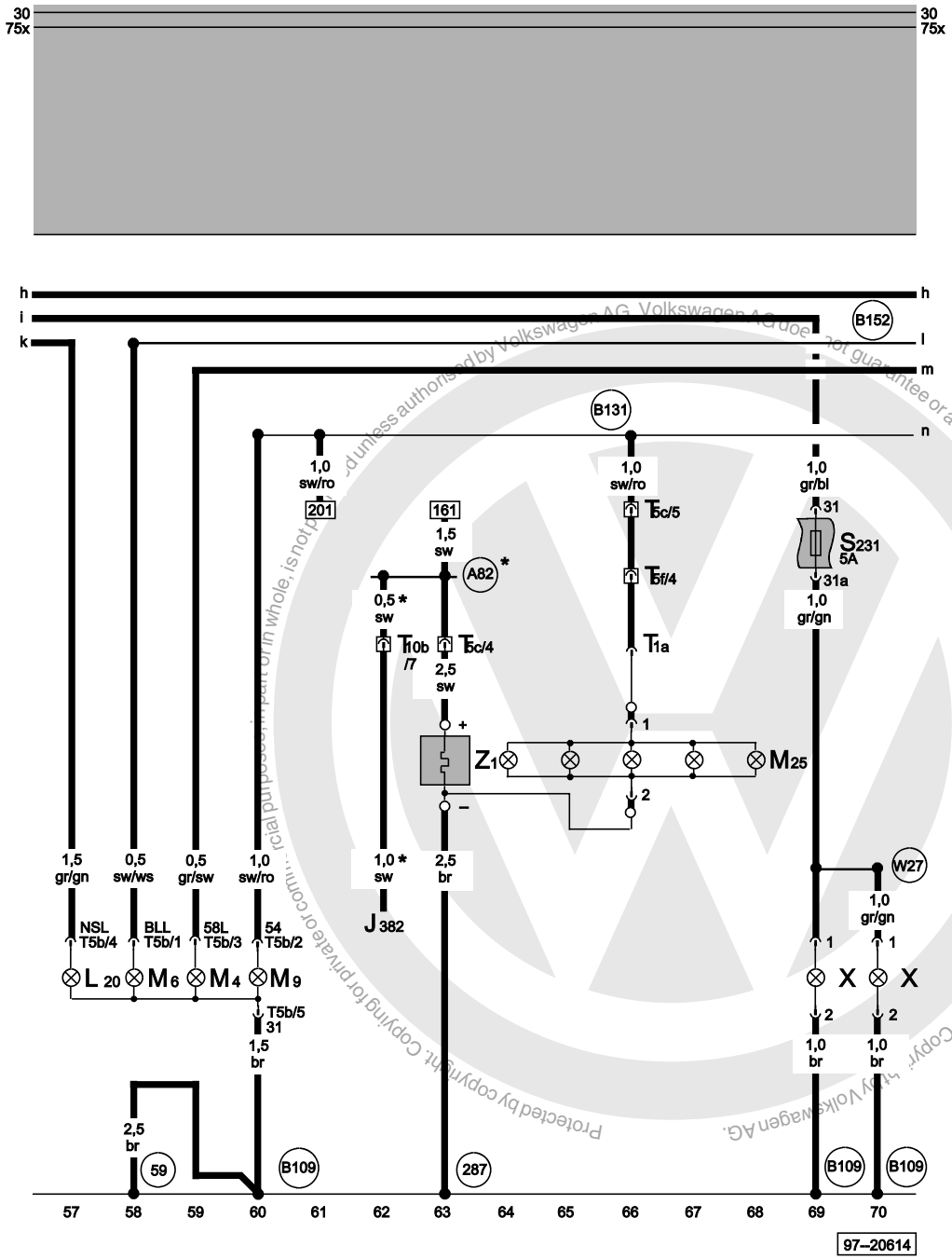

Tail light, left brake light, rear fog light, number plate light, heated rear window

J382	1AV injection system control unit
L20	Rear fog light bulb
M4	Left tail light bulb
M6	Rear left turn signal bulb
M9	Left brake light bulb
M25	High level brake light bulb
S231	Fuse on fuse holder
T1a	1-pin connector, black, in rear lid
T5b	5-pin connector, black, on left rear light
T5c	5-pin connector, black, in rear lid feeder wiring harness
T5f	5-pin connector, black, in rear lid
T10b	10-pin connector, black, near relay station
X	Registration plate light
Z1	Heated rear window
59	Earth point, near left tail light
A82	Connection (windscreen heater), in dash panel wiring harness
B109	Earth connection, in rear left interior wiring harness
B131	Connection (54), in interior wiring harness
B152	Connection (BL), in interior wiring harness
287	Earth connection, in rear lid feeder wiring harness
W27	Positive connection (58), in tail lights wiring harness
*	Only models with a petrol engine

ws	=	white
sw	=	black
ro	=	red
br	=	brown
gn	=	green
bl	=	blue
gr	=	grey
li	=	purple
ge	=	yellow
or	=	orange
rs	=	pink

satelettronica

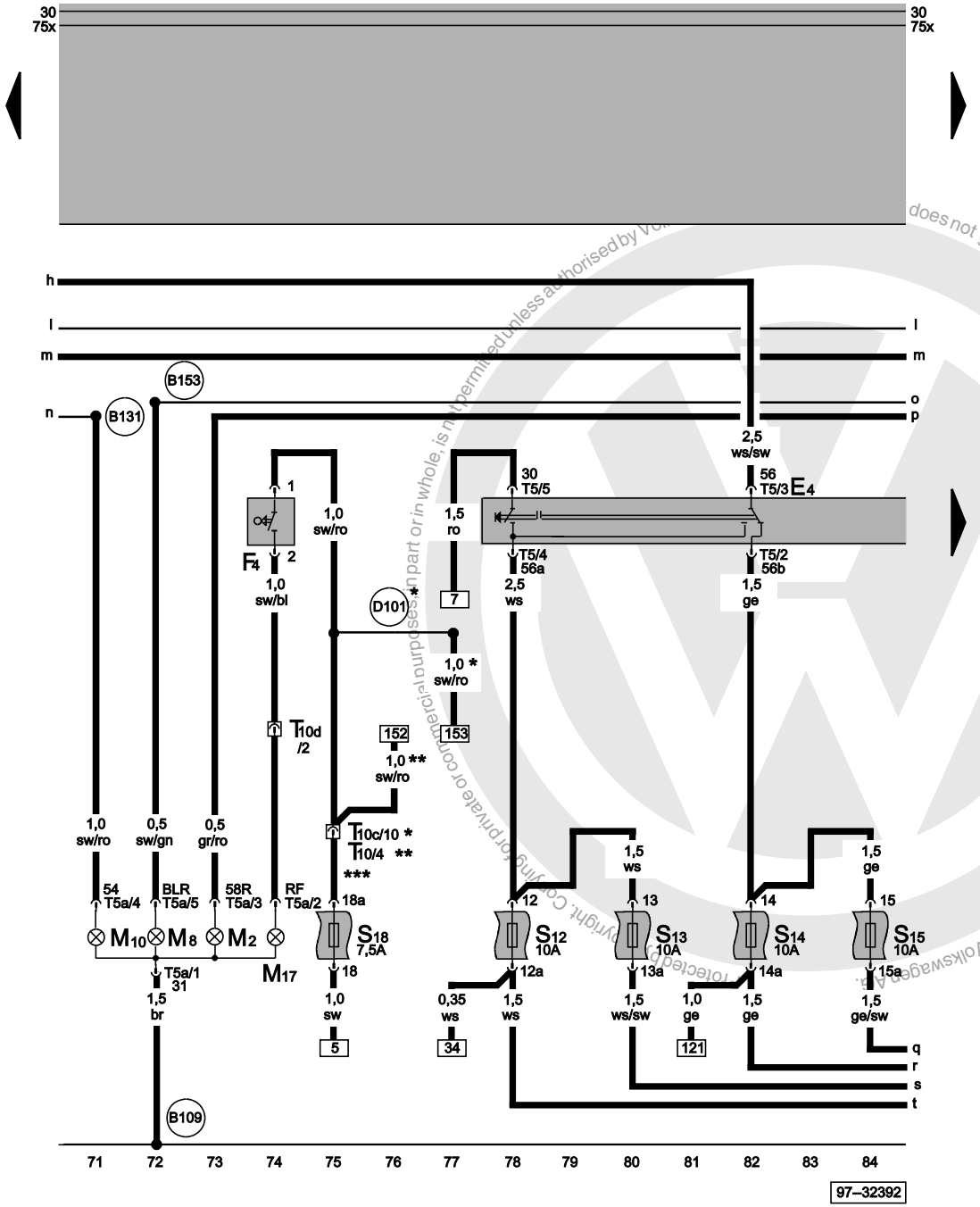

Right tail light, right brake light, reversing light, headlight dipper/flasher switch

E4	Headlight dipper and flasher switch
F4	Reversing light switch
M2	Right tail light bulb
M8	Rear right turn signal bulb
M10	Right brake light bulb
M17	Right reversing light bulb
S12	Fuse on fuse holder
S13	Fuse on fuse holder
S14	Fuse on fuse holder
S15	Fuse on fuse holder
S18	Fuse on fuse holder
T5	5-pin connector, black, behind steering column switch trim
T5a	5-pin connector, black, on rear right tail light
T10	10-pin connector, white, near relay station
T10c	10-pin connector, blue, near relay station
T10d	10-pin connector, red, near relay station
B109	Earth connection, in rear left interior wiring harness
B131	Connection (54), in interior wiring harness
B153	Connection (RTS), in interior wiring harness
D101	Connection 1, in engine compartment wiring harness
*	Only models with a petrol engine
**	Only models with a diesel engine
***	Not models with an automatic gearbox

ws	=	white
sw	=	black
ro	=	red
br	=	brown
gn	=	green
bl	=	blue
gr	=	grey
li	=	purple
ge	=	yellow
or	=	orange
rs	=	pink

satelettronica

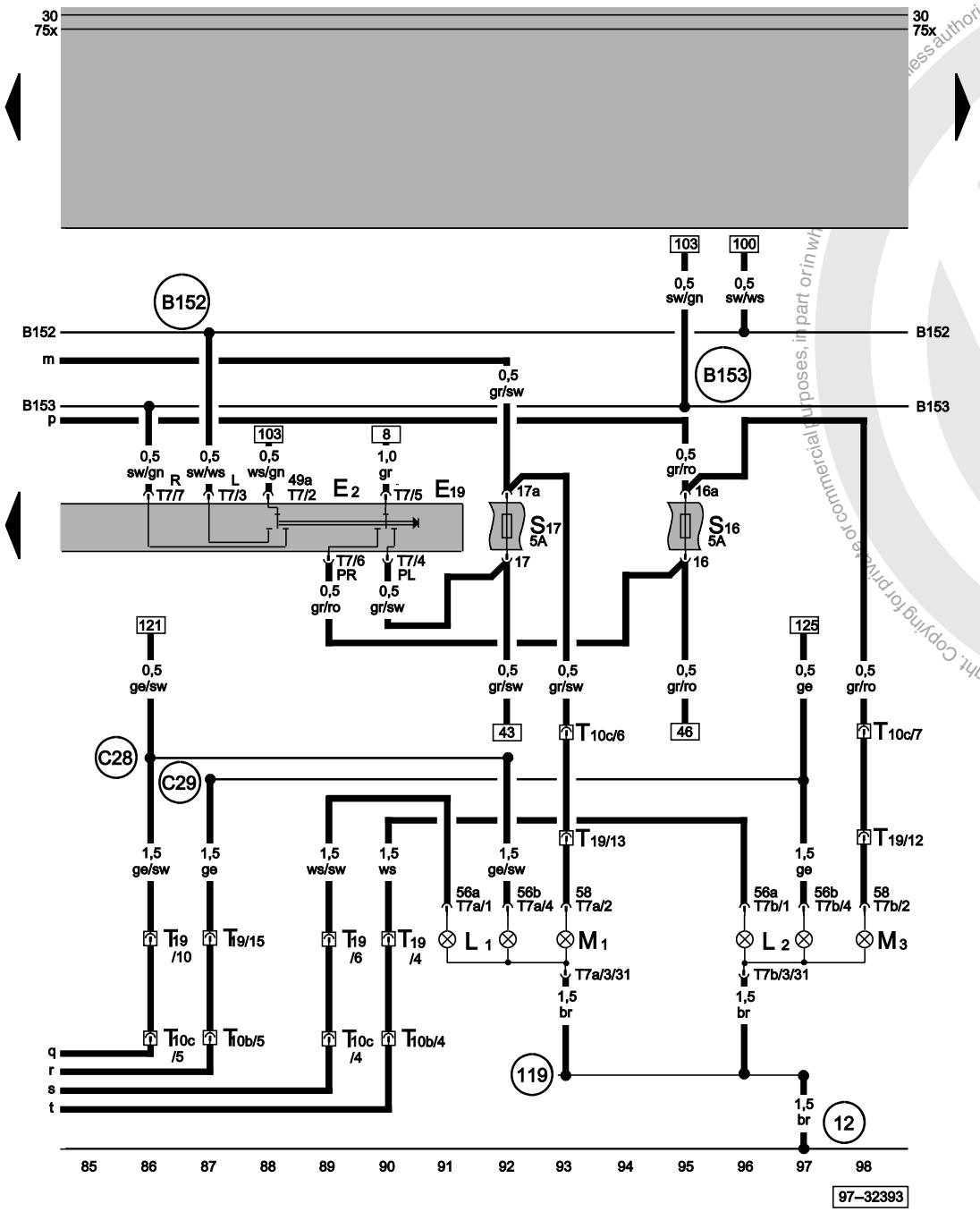

Turn signal switch, parked light switch, front bulbs

E2	Turn signal switch
E19	Parking light switch
L1	Left twin filament bulb
L2	Right twin filament bulb
M1	Left side light bulb
M3	Right side light bulb
S16	Fuse on fuse holder
S17	Fuse on fuse holder
T7	7-pin connector, black, behind steering column switch trim
T7a	7-pin connector, black, near left headlight
T7b	7-pin connector, black, near left headlight
T10b	10-pin connector, black, near relay station
T10c	10-pin connector, blue, near relay station
12	Earth point, on left in engine compartment
119	Earth connection 1, in headlight wiring harness
B152	Connection (BL), in interior wiring harness
B153	Connection (RTS), in interior wiring harness
C28	Connection 1 (56b), in headlight wiring harness
C29	Connection 2 (56b), in headlight wiring harness

ws	=	white
sw	=	black
ro	=	red
br	=	brown
gn	=	green
bl	=	blue
gr	=	grey
li	=	purple
ge	=	yellow
or	=	orange
rs	=	pink

Protected by copyright. Copying for private or commercial purposes, in part or in whole, is not permitted unless authorised by Volkswagen AG. Volkswagen AG does not guarantee or accept any liability with respect to the correctness of information in this document. Copyright by Volkswagen AG.

satelettronica

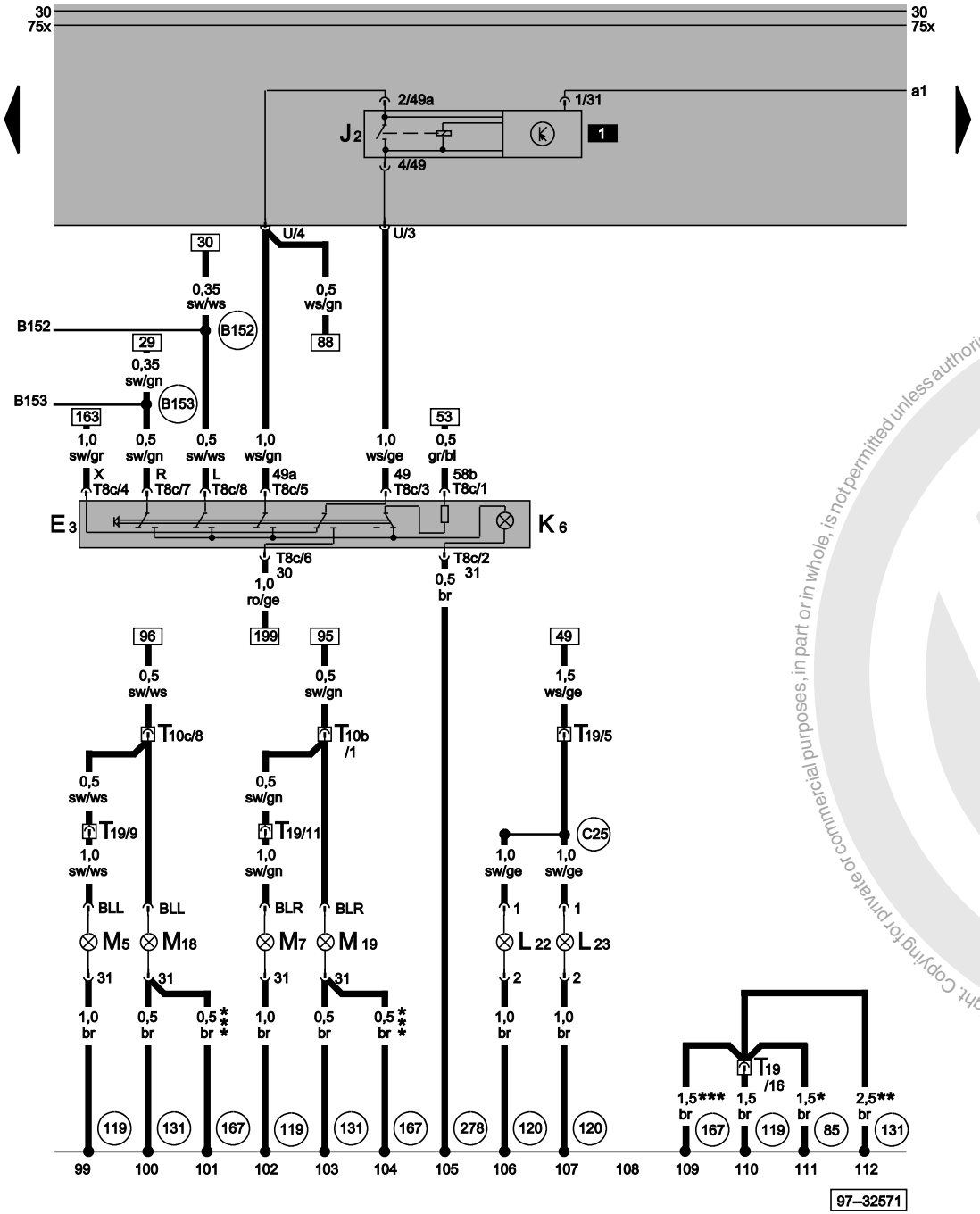

Hazard warning light relay, hazard warning light switch

E3	Hazard warning light switch
J2	Hazard warning light relay
K6	Hazard warning light system warning lamp
L22	Left fog light bulb
L23	Right fog light bulb
M5	Front left turn signal bulb
M7	Front right turn signal bulb
M18	Left side repeater turn signal bulb
M19	Right side repeater turn signal bulb
T8c	8-pin connector, black, on hazard warning light switch
T10b	10-pin connector, black, near relay station
T10c	10-pin connector, blue, near relay station
T19	19-pin connector, black, on front left in engine compartment
85	Earth connection 1, in engine compartment wiring harness
119	Earth connection 1, in headlight wiring harness
131	Earth connection 2, in engine compartment wiring harness
167	Earth connection 4, in engine compartment wiring harness
B152	Connection (BL), in interior wiring harness
B153	Connection (RTS), in interior wiring harness
C25	Connection (fog light), in front lighting wiring harness
*	Only petrol engine models with manual gearbox
**	Only models with a diesel engine
***	Only automatic gearbox

ws	=	white
sw	=	black
ro	=	red
br	=	brown
gn	=	green
bl	=	blue
gr	=	grey
li	=	purple
ge	=	yellow
or	=	orange
rs	=	pink

For private copy only. Copyright. Copyright by Volkswagen AG. For commercial purposes, in part or in whole, is not permitted unless authorised by Volkswagen AG. Volkswagen AG does not guarantee or accept any liability with respect to the correctness of information in this document. Copyright by Volkswagen AG.
satelettronica

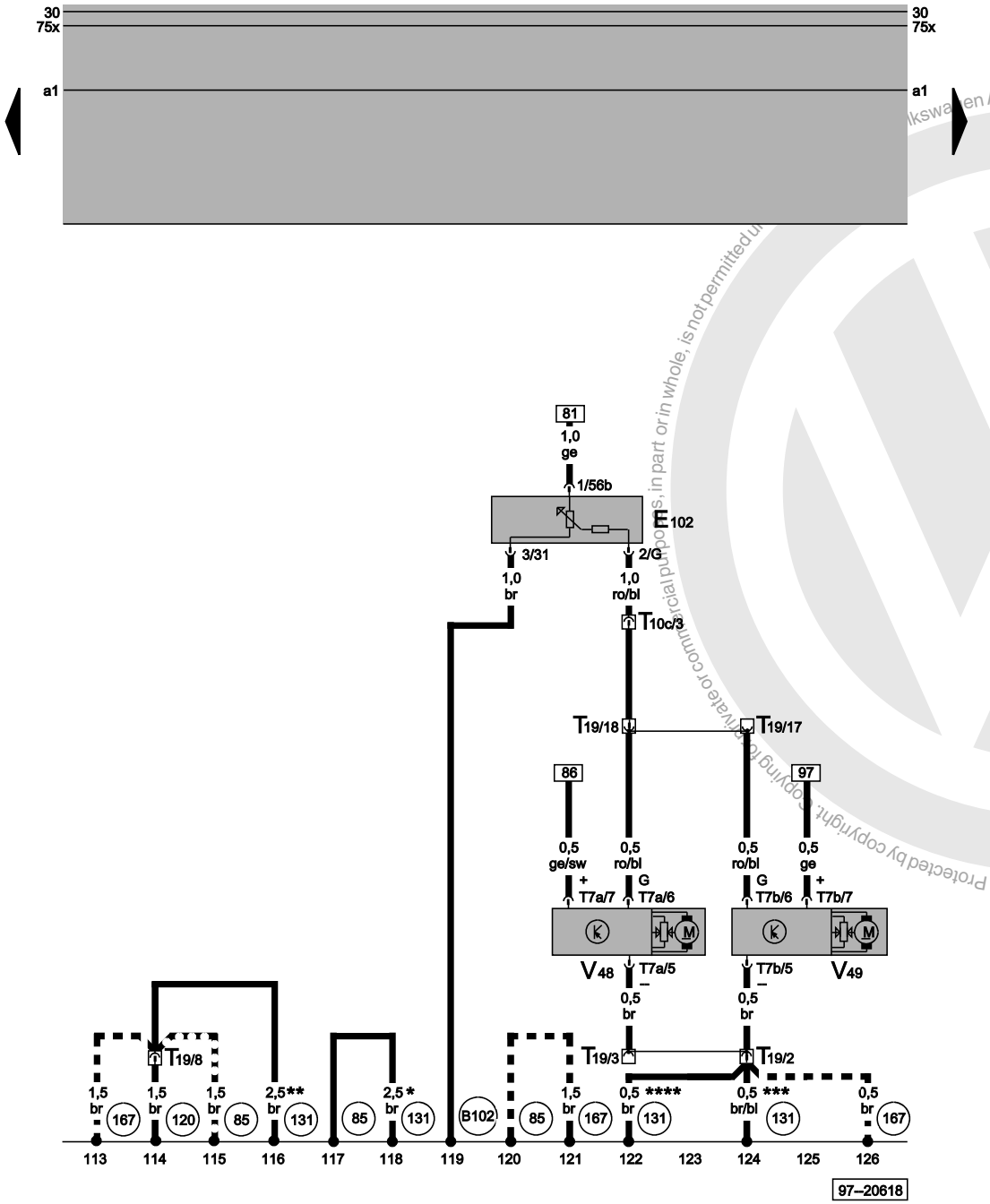

ws = white

Headlight range control

E102	Headlight range control regulator
T7a	7-pin connector, black, near left headlight
T7b	7-pin connector, black, near left headlight
T10c	10-pin connector, blue, near relay station
T19	19-pin connector, black, on front left in engine compartment
V48	Left headlight range control motor
V49	Right headlight range control motor
12	Earth point, on left in engine compartment
85	Earth connection 1, in engine compartment wiring harness
120	Earth connection 2, in headlight wiring harness
131	Earth connection 2, in engine compartment wiring harness
167	Earth connection 4, in engine compartment wiring harness
B102	Earth connection, in front left interior wiring harness
*	Only models with a petrol engine
**	Only models with a diesel engine
***	Only engine codes AGD and AHG
****	Not with engine codes AGD and AHG
<fo:external-graphic src="/../PDOC/samba/tools/png-convert/out//slp/ft_icons/m_m_m3.png" content-width="20pt" scaling="uniform"/>	Only automatic gearbox
<fo:external-graphic src="/../	Only petrol engine models with manual gearbox

Protected by copyright. Copying for private or commercial purposes, in part or in whole, is not permitted unless authorised by Volkswagen AG. Volkswagen AG does not guarantee or accept any liability with respect to the correctness of information in this document. Copyright by Volkswagen AG.

satelettronica

sw	=	black
ro	=	red
br	=	brown
gn	=	green
bl	=	blue
gr	=	grey
li	=	purple
ge	=	yellow
or	=	orange
rs	=	pink

PDOC/ samba/ tools/ png- convert/ out//slp/ ft_icons/ kkk_inv.p ng" content- width="2 0pt" scaling=" uniform"/ >

Protected by copyright. Copying for private or commercial purposes, in part or in whole, is not permitted unless authorised by Volkswagen AG. Volkswagen AG does not guarantee or accept any liability with respect to the correctness of information in this document. Copyright by Volkswagen AG.

satelettronica

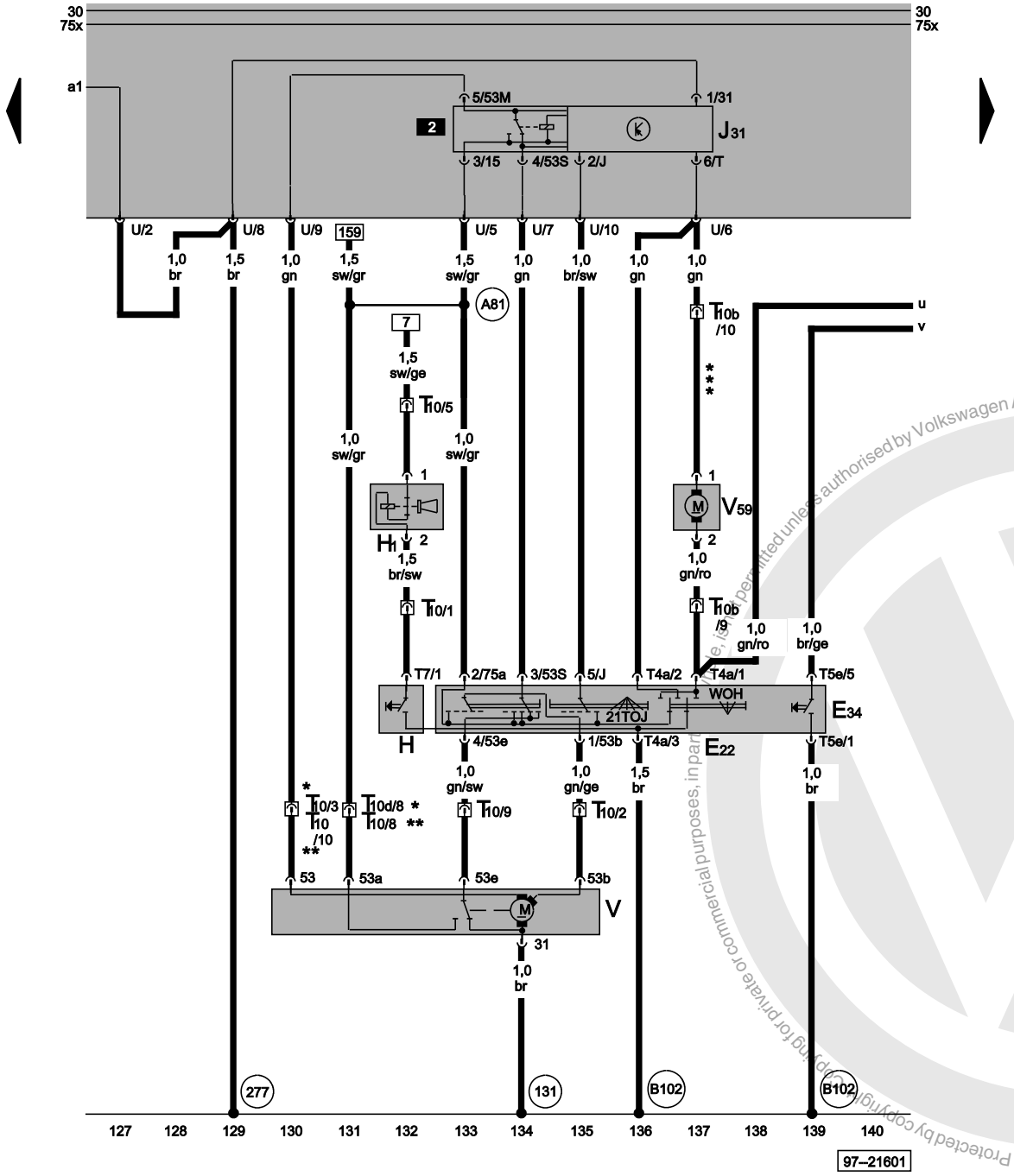

Intermittent wiper switch, wiper motor, front and rear washer pump, intermittent wash and wipe relay, horn

E22	Intermittent wiper switch
E34	Rear wiper switch
H	Horn plate
H1	Horn
J31	Automatic intermittent wash and wipe relay
T4a	4-pin connector, black, behind steering column switch trim
T5e	5-pin connector, black, behind steering column switch trim
T7	7-pin connector, black, behind steering column switch trim
T10	10-pin connector, white, near relay station
T10b	10-pin connector, black, near relay station
T10d	10-pin connector, red, near relay station
V	Windscreen wiper motor
V59	Windscreen and rear window washer pump
131	Earth connection 2, in engine compartment wiring harness
277	Earth connection 3, in interior wiring harness
A81	Connection 2 (X), in dash panel wiring harness
B102	Earth connection, in front left interior wiring harness
*	Only models with a petrol engine
**	Only models with a diesel engine
***	Not with headlight washer system

ws	=	white
sw	=	black
ro	=	red
br	=	brown
gn	=	green
bl	=	blue
gr	=	grey
li	=	purple
ge	=	yellow
or	=	orange
rs	=	pink

Protected by copyright. Copying for private or commercial purposes, in part or in whole, is not permitted unless authorised by Volkswagen AG. Volkswagen AG does not guarantee or accept any liability with respect to the correctness of information in this document. Copyright by Volkswagen AG.

satelettronica

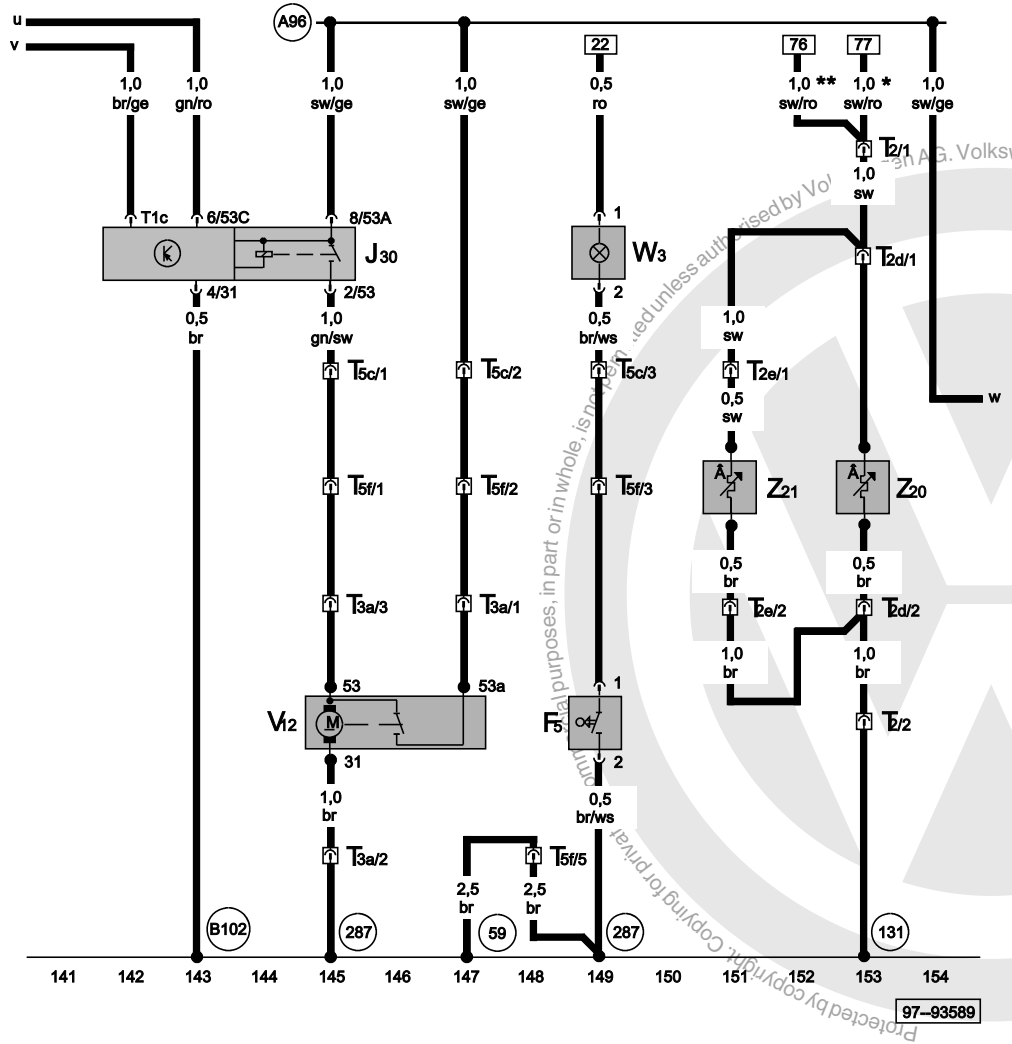

Rear window wiper motor, luggage compartment light, heater element for washer jet

F5	Luggage compartment light switch
J30	Rear window wiper and washer relay
T1c	Single connector, black, in rear wash and wipe system relay
T2	2-pin connector, black, in left plenum chamber
T2d	2-pin connector, black, on left on engine compartment lid
T2e	2-pin connector, black, on right on engine compartment lid
T3a	3-pin connector, black, in rear lid near wiper motor
T5c	5-pin connector, black, in rear lid feeder wiring harness
T5f	5-pin connector, black, in rear lid
V12	Rear window wiper motor
W3	Luggage compartment light
Z20	Left washer jet heater element
Z21	Right washer jet heater element
59	Earth point, near left tail light
131	Earth connection 2, in engine compartment wiring harness
287	Earth connection, in rear lid feeder wiring harness
A96	Connection (53a), in dash panel wiring harness
B102	Earth connection, in front left interior wiring harness
*	Only models with a petrol engine
**	Only models with a diesel engine

ws	=	white
sw	=	black
ro	=	red
br	=	brown
gn	=	green
bl	=	blue
gr	=	grey
li	=	purple
ge	=	yellow
or	=	orange
rs	=	pink

satelettronica

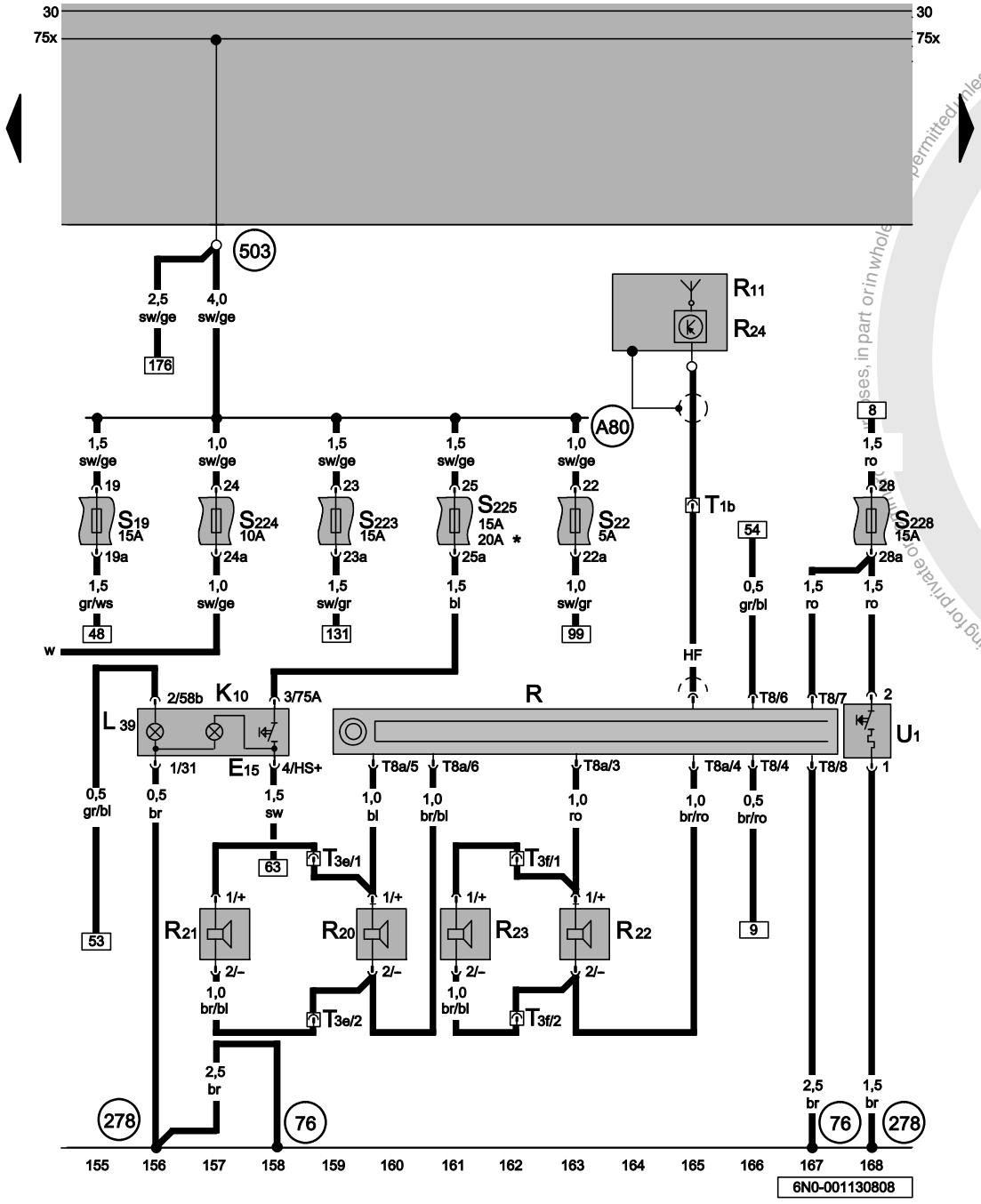

Connection for radio, switch for heated rear window, cigarette lighter, loudspeaker, aerial, aerial amplifier

E15	Heated rear window switch
K10	Heated rear window warning lamp
L39	Heated rear window switch illumination bulb
R	Radio
R11	Aerial
R24	Aerial amplifier
R20	Front left treble loudspeaker
R21	Front left bass loudspeaker
R22	Front right treble loudspeaker
R23	Front right bass loudspeaker
S19	Fuse on fuse holder
S22	Fuse on fuse holder
S223	Fuse on fuse holder
S224	Fuse on fuse holder
S225	Fuse on fuse holder
S228	Fuse on fuse holder
T1b	Single connector, black, on lower part of left A-pillar
T3e	3-connector, black, on lower part of left A-pillar
T3f	3-pin connector, black
T8	8-pin connector, black, on radio
T8a	8-pin connector, brown, on radio
U1	Cigarette lighter
76	Earth point, near selector mechanism
278	Earth connection 4, in interior wiring harness
503	Screw connection (75x), on relay plate
A80	Connection 1 (X), in dash panel wiring harness
*	From June 1997

ws	=	white
sw	=	black
ro	=	red
br	=	brown
gn	=	green
bl	=	blue
gr	=	grey
li	=	purple
ge	=	yellow
or	=	orange
rs	=	pink

Protected by copyright. Copying for private or commercial purposes, in part or in whole, is not permitted unless authorised by Volkswagen AG. Volkswagen AG does not guarantee or accept any liability with respect to the correctness of information in this document. Copyright by Volkswagen AG.

satelettronica

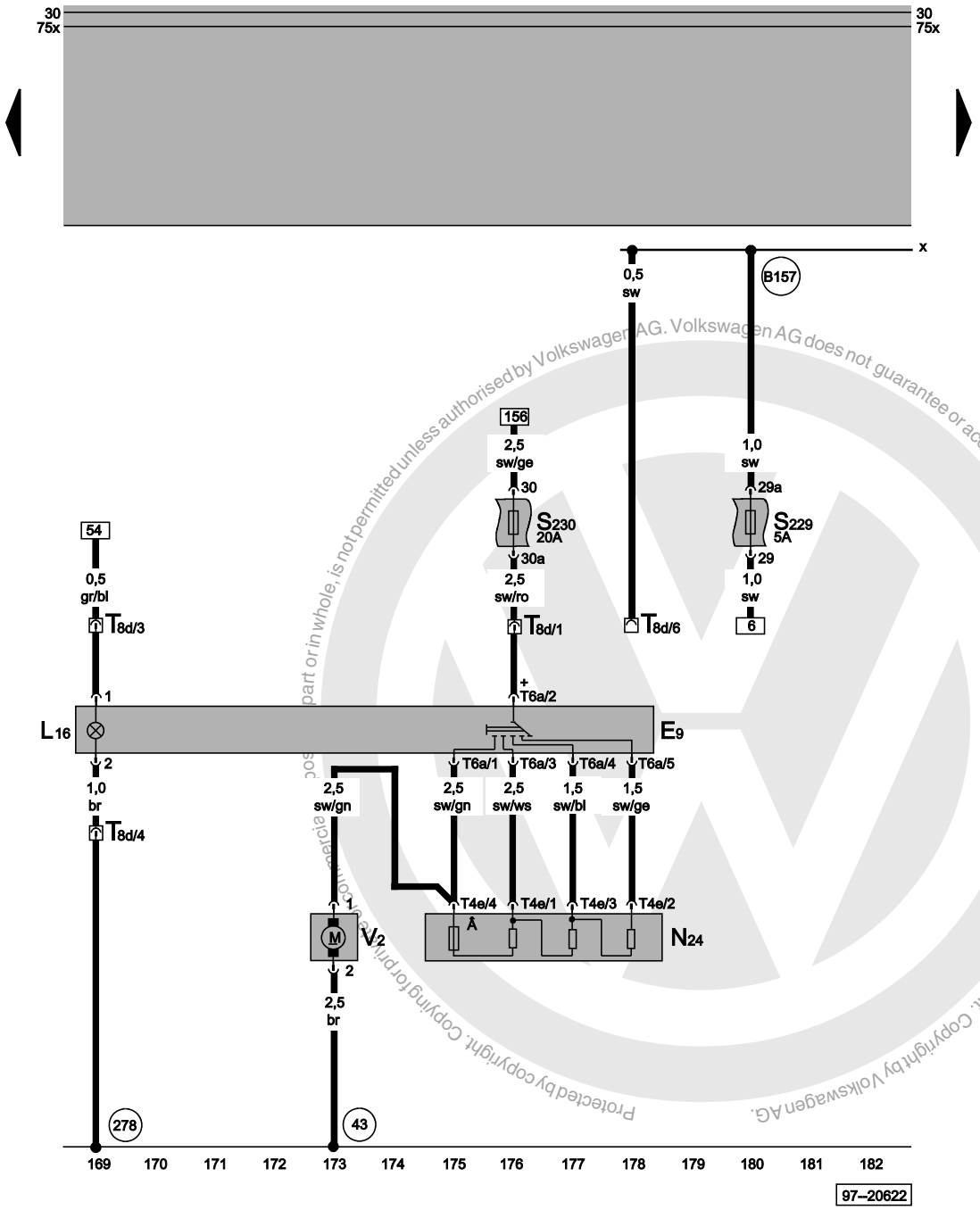

Fresh air blower, fresh air blower switch, fresh air/ recirculated air flap positioning motor

E9	Fresh air blower switch
L16	Fresh air regulator illumination bulb
N24	Fresh air blower series resistor with overheating fuse
S229	Fuse on fuse holder
S230	Fuse on fuse holder
T4e	4-pin connector, black, on fresh air blower series resistor
T6a	6-pin connector, black, on fresh air blower switch
T8d	8-pin connector, black, behind dash panel
V2	Fresh air blower
43	Earth point, lower part of right A-pillar
278	Earth connection 4, in interior wiring harness
B157	Positive connection 3 (15a), in interior wiring harness

ws	=	white
sw	=	black
ro	=	red
br	=	brown
gn	=	green
bl	=	blue
gr	=	grey
li	=	purple
ge	=	yellow
or	=	orange
rs	=	pink

Protected by copyright. Copying for private or commercial purposes, in part or in whole, is not permitted unless authorised by Volkswagen AG. Volkswagen AG does not guarantee or accept any liability with respect to the correctness of information in this document. Copyright by Volkswagen AG.

satelettronica

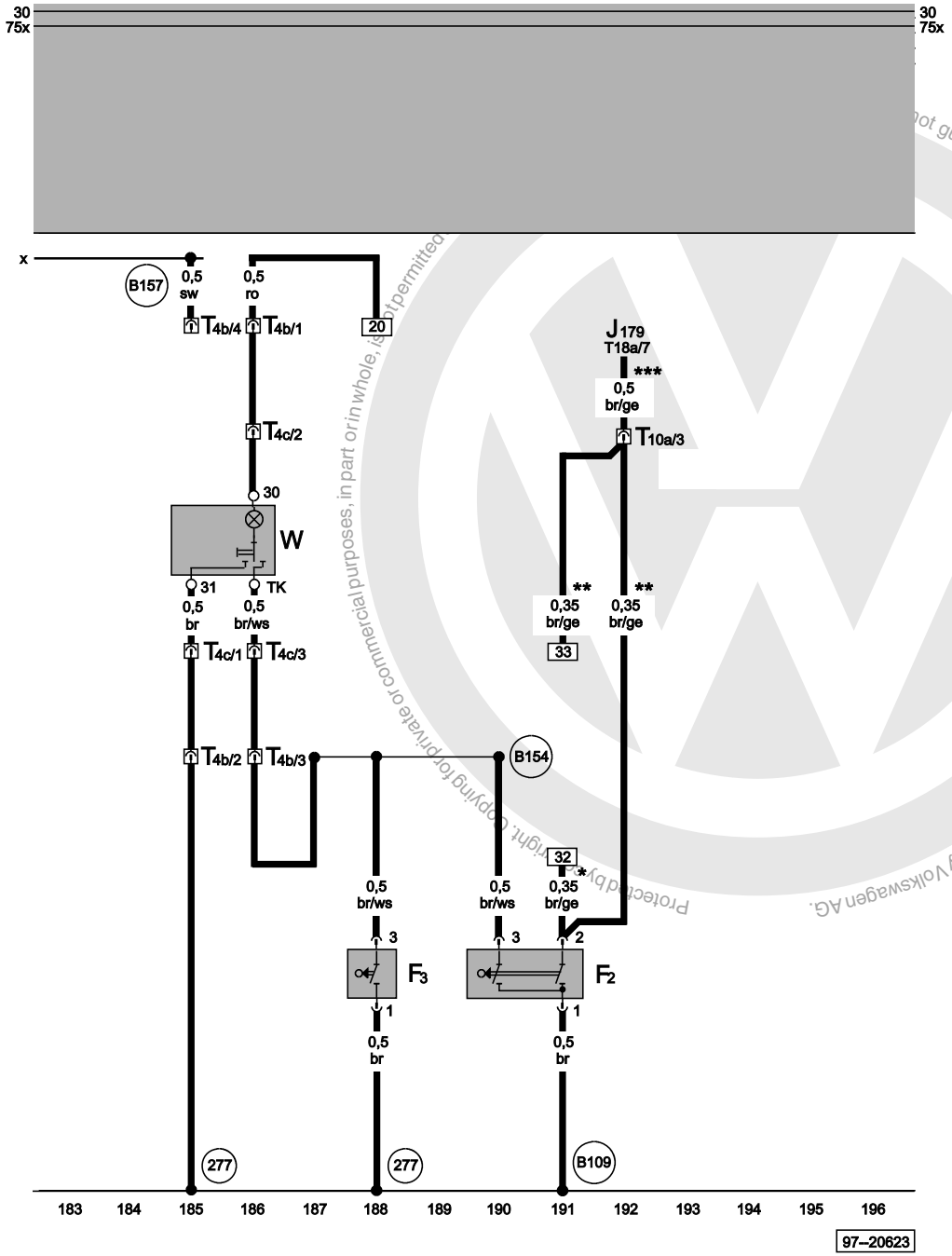

Interior light, door contact switch

F2	Driver door contact switch
F3	Front passenger door contact switch
J179	Automatic glow period control unit, above relay plate
T4b	4-pin connector, black, on left behind dash panel
T4c	4-pin connector, black, in interior light wiring harness
T10a	10-pin connector, green, near relay station
T18a	18-pin connector, black, on automatic glow period control unit
W	Front interior light
277	Earth connection 3, in interior wiring harness
B109	Earth connection, in rear left interior wiring harness
B154	Connection 1 (DCt), in interior wiring harness
B157	Positive connection 3 (15a), in interior wiring harness
*	Only models with a petrol engine
**	Only models with a diesel engine
***	Only engine code AEF

ws	=	white
sw	=	black
ro	=	red
br	=	brown
gn	=	green
bl	=	blue
gr	=	grey
li	=	purple
ge	=	yellow
or	=	orange
rs	=	pink

Protected by copyright. Copying for private or commercial purposes, in part or in whole, is not permitted. Copyright by Volkswagen AG. We do not guarantee or accept any liability with respect to the correctness of information in this document.
satelettronica

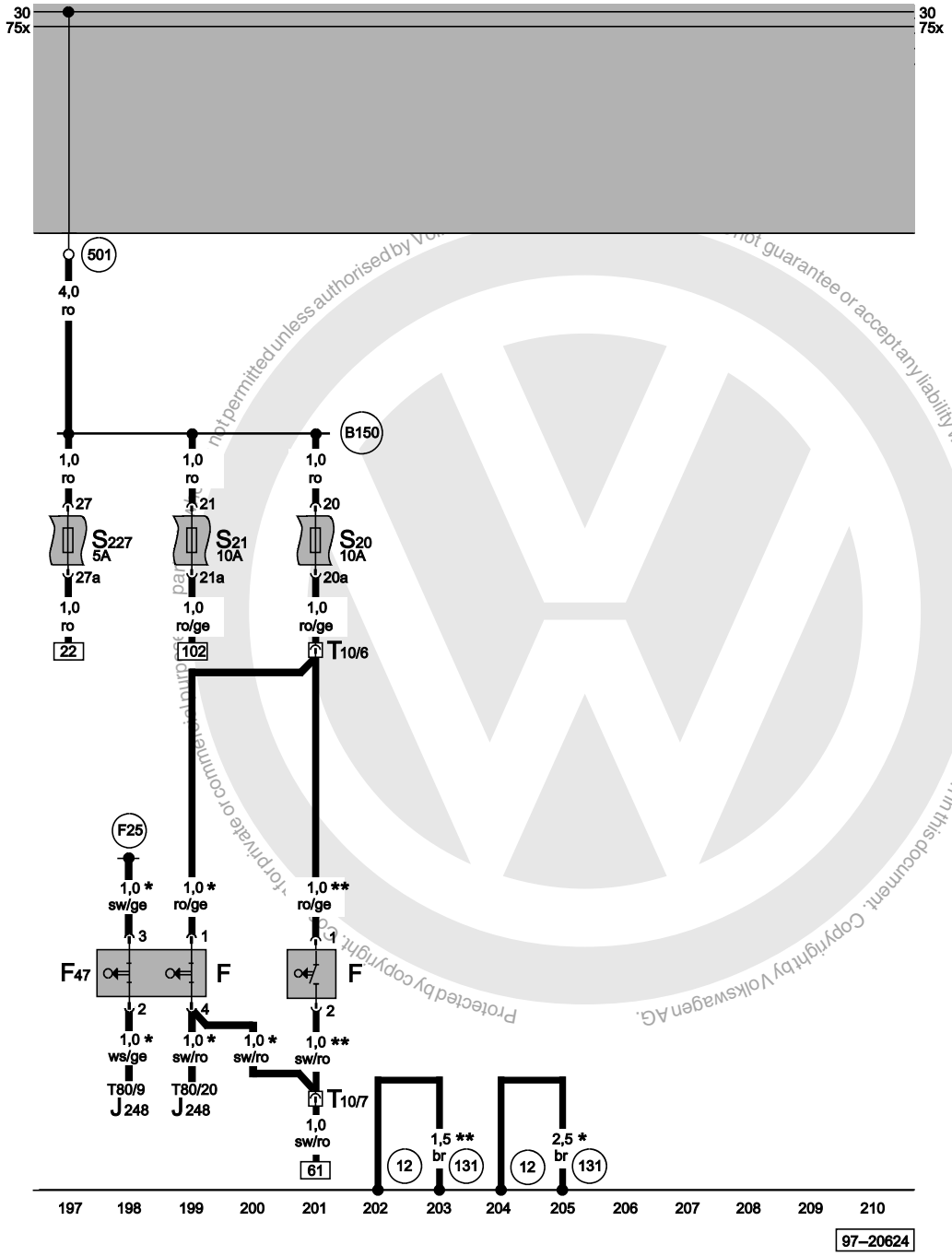

Brake light switch

F	Brake light switch (00526)
F47	Brake pedal switch for diesel direct injection system
J248	Diesel direct injection system control unit, on right in plenum chamber
S20	Fuse on fuse holder
S21	Fuse on fuse holder
S227	Fuse on fuse holder
T10	10-pin connector, white, near relay station
T80	80-pin connector, black
12	Earth point, on left in engine compartment
131	Earth connection 3, in engine compartment wiring harness
501	Screw connection 2 (30), on relay plate
B150	Positive connection 2 (30a), in interior wiring harness
F25	Connection 1, in diesel direct injection system wiring harness
*	Only engine codes AGD and AHG
**	Only engine code AEF

ws	=	white
sw	=	black
ro	=	red
br	=	brown
gn	=	green
bl	=	blue
gr	=	grey
li	=	purple
ge	=	yellow
or	=	orange
rs	=	pink

Protected by copyright. Copyright by Volkswagen AG. not permitted unless authorised by Volkswagen AG. not guarantee or accept any liability with respect to the correctness of information in this document. for private or commercial purposes, in part or in whole, is not permitted unless authorised by Volkswagen AG.

satelettronica

1.9 l/47 kW - diesel engine, engine code AGD

From May 1996

1.7 l/42 kW - diesel engine, engine code AHG

From May 1996

Notes:

For information concerning

- Relay and fuse assignment
- Multi-pin connectors
- Control units and relays
- Earth connections

⇒ Overview of Fitting Locations!

For information concerning

- Fault Finding Programs

⇒ Guided Fault Finding

Protected by copyright. Copying for private or commercial purposes, in part or in whole, is not permitted unless authorised by Volkswagen AG. Volkswagen AG does not guarantee or accept any liability with respect to the correctness of information in this document. Copyright by Volkswagen AG.

satelettronica

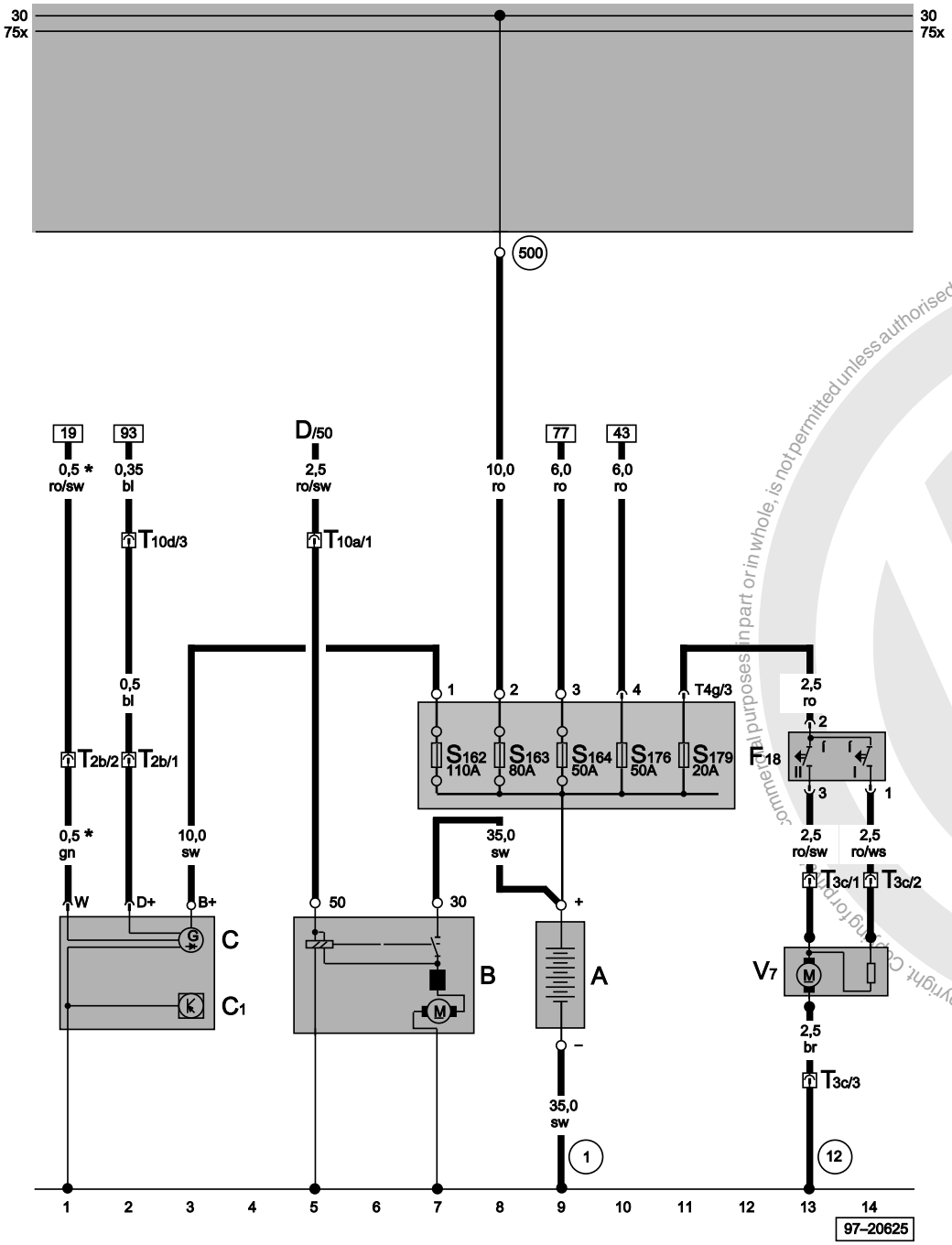

Battery, starter, alternator, radiator fan

A	Battery
B	Starter
C	Alternator
C1	Voltage regulator
D	Ignition/starter switch
F18	Thermal switch for radiator fan
S162	Fuse 1 (30), on battery fuse holder
S163	Fuse 2 (30), on battery fuse holder
S164	Fuse 2 (30), on battery fuse holder
S176	Fuse 4 (30), on battery fuse holder
S179	Fuse 7 (30), on battery fuse holder
T2b	2-pin connector, black, near starter
T3c	3-pin connector, black, on radiator fan
T4g	4-pin connector, black, near battery
T10a	10-pin connector, green, near relay station
T10d	10-pin connector, red, near relay station
V7	Radiator fan
(1)	Earth strap, battery - body
(12)	Earth point, on left in engine compartment
(500)	Screw connection 1 (30), on relay plate
*	Only models with coolant heater element

ws	=	white
sw	=	black
ro	=	red
br	=	brown
gn	=	green
bl	=	blue
gr	=	grey
li	=	purple
ge	=	yellow
or	=	orange
rs	=	pink

Photocopied by copyright. Copying for commercial purposes, in part or in whole, is not permitted unless authorised by Volkswagen AG. Volkswagen AG does not guarantee or accept any liability with respect to the correctness of information in this document. Copyright by Volkswagen AG.

satelettronica

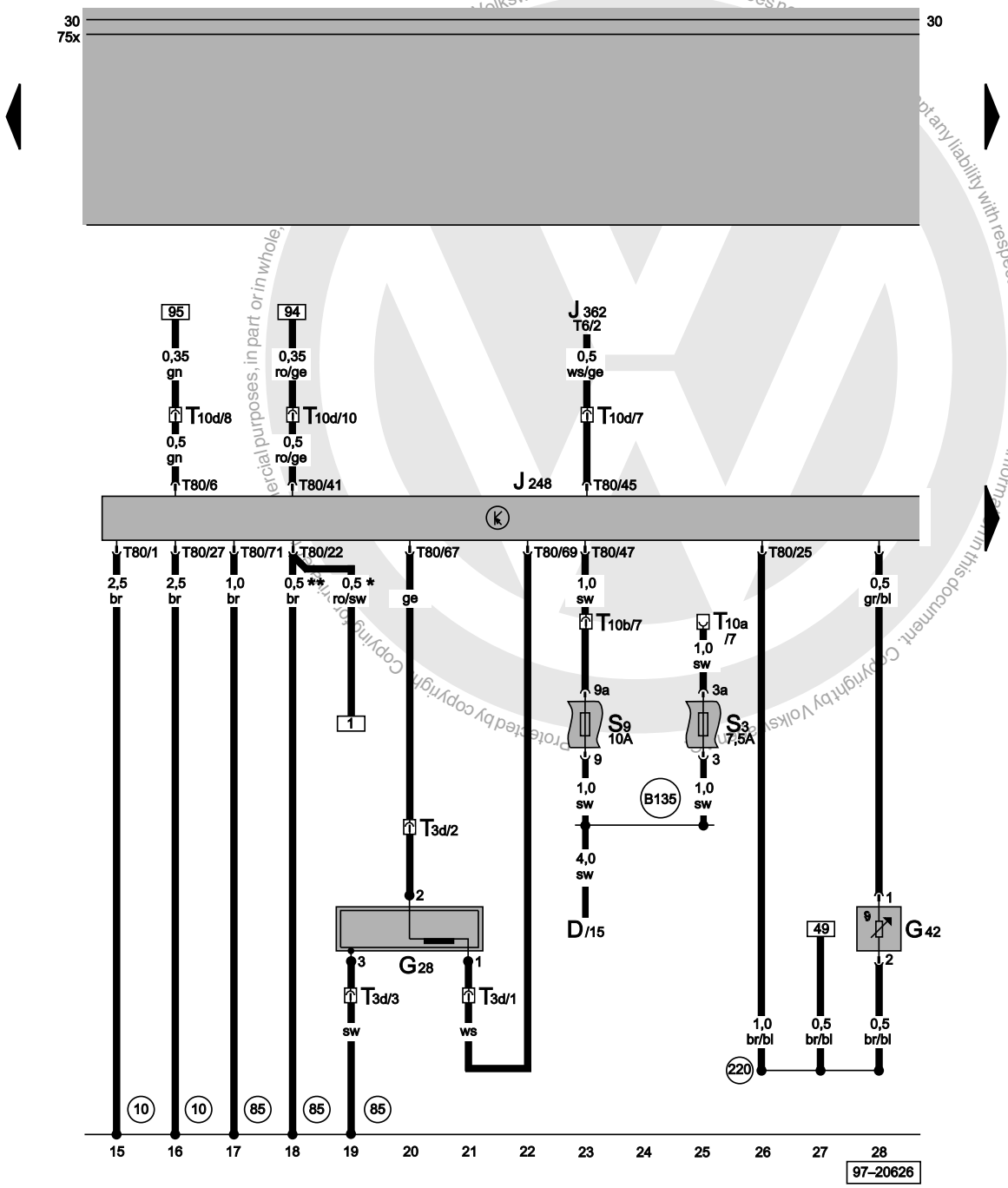

Diesel direct injection system control unit, engine speed sender, intake air temperature sender

D	Ignition/starter switch
G28	Engine speed sender (00513)
G42	Intake air temperature sender (00523)
J248	Diesel direct injection system control unit, on right in plenum chamber
J362	Immobilizer control unit, next to steering column
S3	Fuse on fuse holder
S9	Fuse on fuse holder
T3d	3-pin connector, black, on left on cylinder head
T10a	10-pin connector, green, near relay station
T10b	10-pin connector, black, near relay station
T10d	10-pin connector, red, near relay station
T80	80-pin connector, black
10	Earth point, in plenum chamber
85	Earth connection 1, in engine compartment wiring harness
220	Earth connection (sender earth), in engine wiring harness
B135	Connection (15a), in interior wiring harness
*	Only models with coolant heater element
**	Not with coolant heater element

ws	=	white
sw	=	black
ro	=	red
br	=	brown
gn	=	green
bl	=	blue
gr	=	grey
li	=	purple
ge	=	yellow
or	=	orange
rs	=	pink

satelettronica

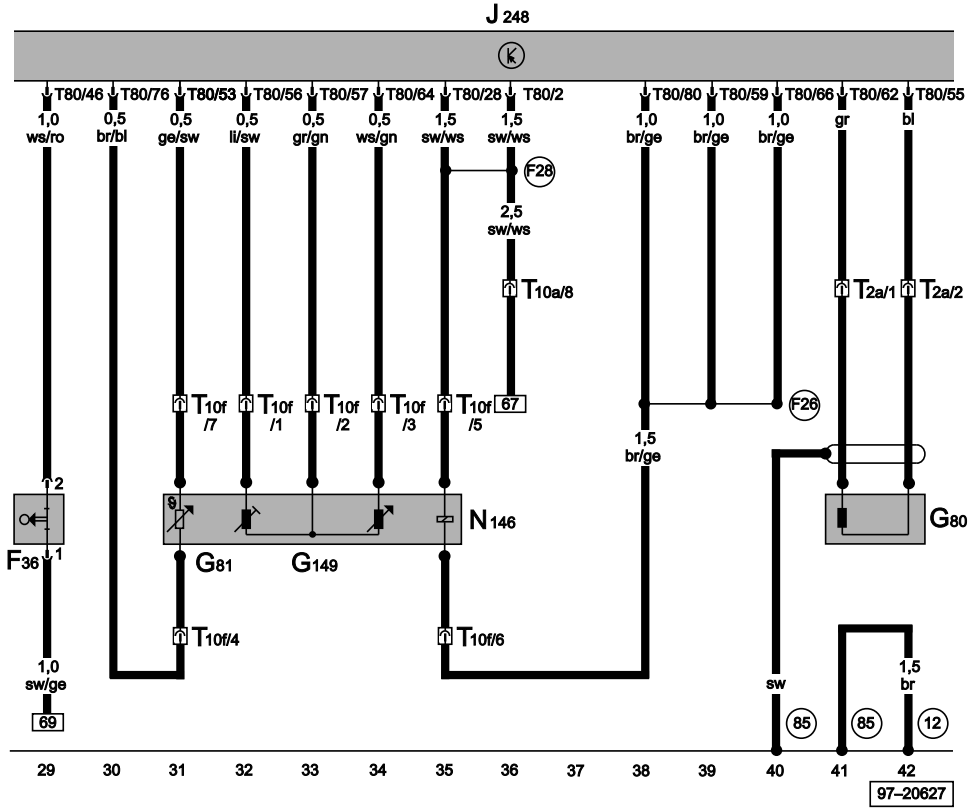

Diesel direct injection system control unit, metering adjuster, needle lift sender, fuel temperature sender, modulating piston movement sender

F36	Clutch pedal switch (00650)
G80	Needle lift sender (00542)
G81	Fuel temperature sender (00539)
G149	Modulating piston movement sender (00765)
J248	Diesel direct injection system control unit, on right in plenum chamber
N146	Metering adjuster (01268)
T2a	2-pin connector, brown, on left on cylinder head near injector pump
T10a	10-pin connector, green, near relay station
T10f	10-pin connector, black, on injection pump
T80	80-pin connector, black
12	Earth point, on left in engine compartment
85	Earth connection 1, in engine compartment wiring harness
F26	Connection 2, in diesel direct injection system wiring harness
F28	Connection 3, in diesel direct injection system wiring harness

ws	=	white
sw	=	black
ro	=	red
br	=	brown
gn	=	green
bl	=	blue
gr	=	grey
li	=	purple
ge	=	yellow
or	=	orange
rs	=	pink

Protected by copyright. Copying for private or commercial purposes, in part or in whole, is not permitted unless authorised by Volkswagen AG. Volkswagen AG does not guarantee or accept any liability with respect to the correctness of information in this document. Copyright by Volkswagen AG.
satelettronica

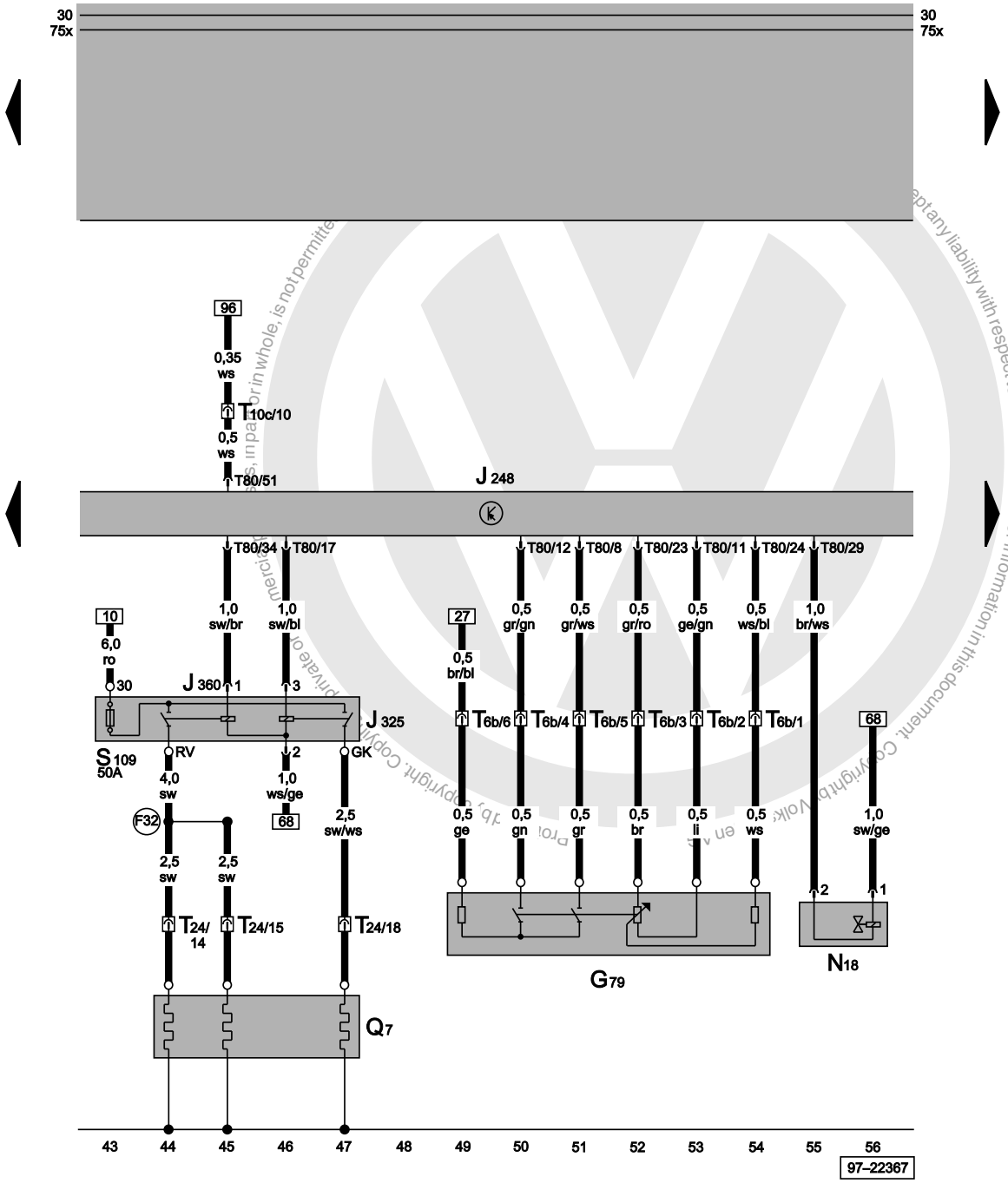

Diesel direct injection system control unit, accelerator position sender, coolant heater element relay, coolant heater element, exhaust gas recirculation valve

G79	Accelerator position sender (00777)
J248	Diesel direct injection system control unit, on right in plenum chamber
J325	Coolant heater element relay, on coolant circuit (01160)
J360	High heat output relay, on centre of bulkhead (01194)
N18	Exhaust gas recirculation valve (01265)
Q7	Glow plugs, coolant
S109	Glow plug fuse - (coolant)
T6b	6-pin connector, black, behind relay plate
T10c	10-pin connector, blue, near relay station
T24	24-pin connector, black, on engine
T80	80-pin connector, black
F32	Connection (glow plugs, coolant) in diesel direct injection system wiring harness

ws	=	white
sw	=	black
ro	=	red
br	=	brown
gn	=	green
bl	=	blue
gr	=	grey
li	=	purple
ge	=	yellow
or	=	orange
rs	=	pink

satelettronica

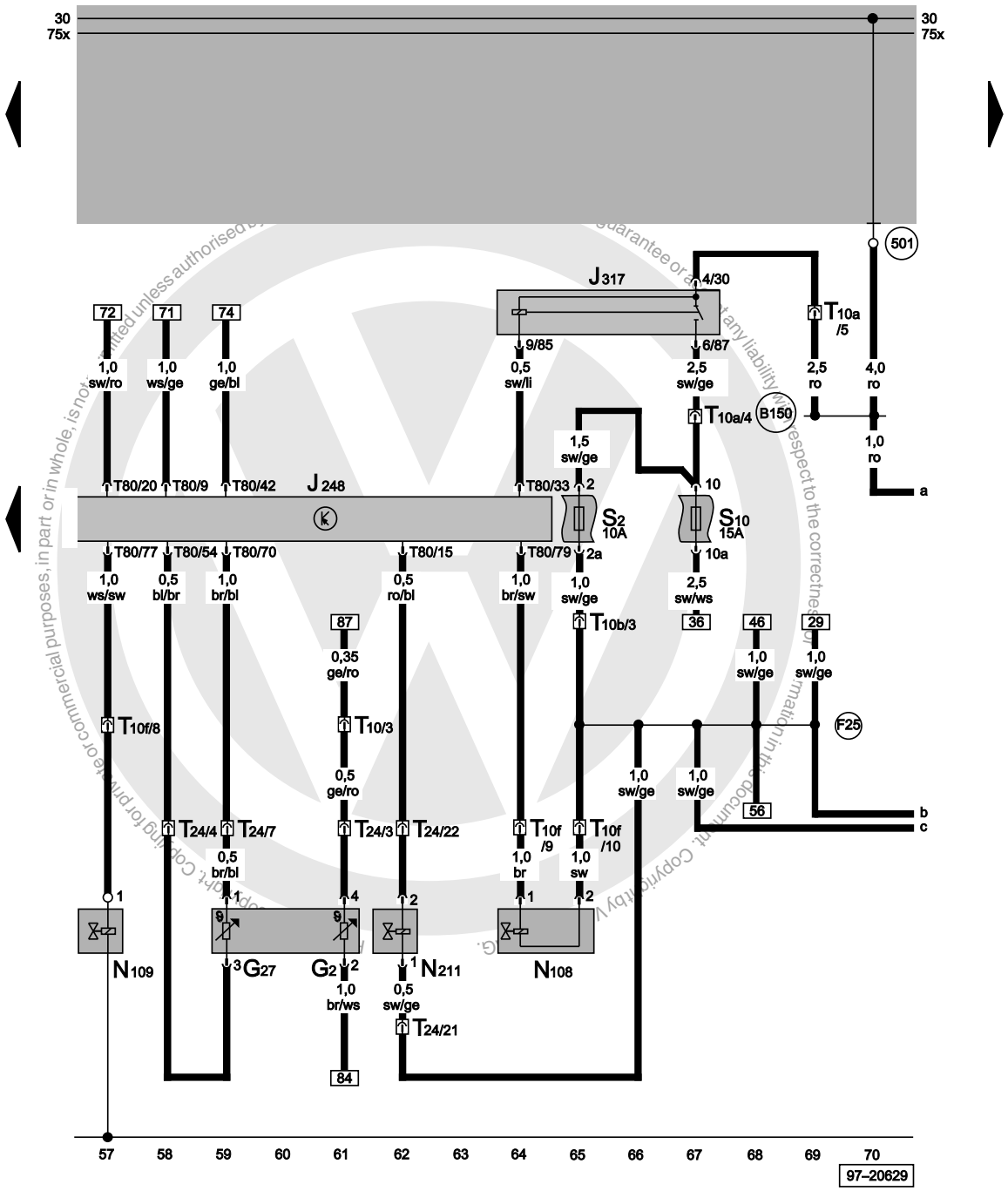

Diesel direct injection system control unit, engine temperature sender, coolant temperature sender, fuel shut-off valve, terminal 30 voltage supply relay, commencement of injection valve, throttle valve module valve

G2	Coolant temperature sender
G27	Engine temperature sender (01204)
J248	Diesel direct injection system control unit, on right in plenum chamber
J317	Terminal 30 voltage supply relay, on relay carrier (01054)
N108	Commencement of injection valve (01269)
N109	Fuel switch-off valve (01237)
N211	Throttle butterfly valve
S2	Fuses on fuse holder
S10	Fuses on fuse holder
T10	10-pin connector, white, near relay station
T10a	10-pin connector, green, near relay station
T10b	10-pin connector, black, near relay station
T10f	10-pin connector, black, on injection pump
T24	24-pin connector, black, on engine
T80	80-pin connector, black
501	Screw connection 2 (30), on relay plate
B150	Positive connection 2 (30a), in interior wiring harness
F25	Connection 1, in diesel direct injection system wiring harness

ws	=	white
sw	=	black
ro	=	red
br	=	brown
gn	=	green
bl	=	blue
gr	=	grey
li	=	purple
ge	=	yellow
or	=	orange
rs	=	pink

satelettronica

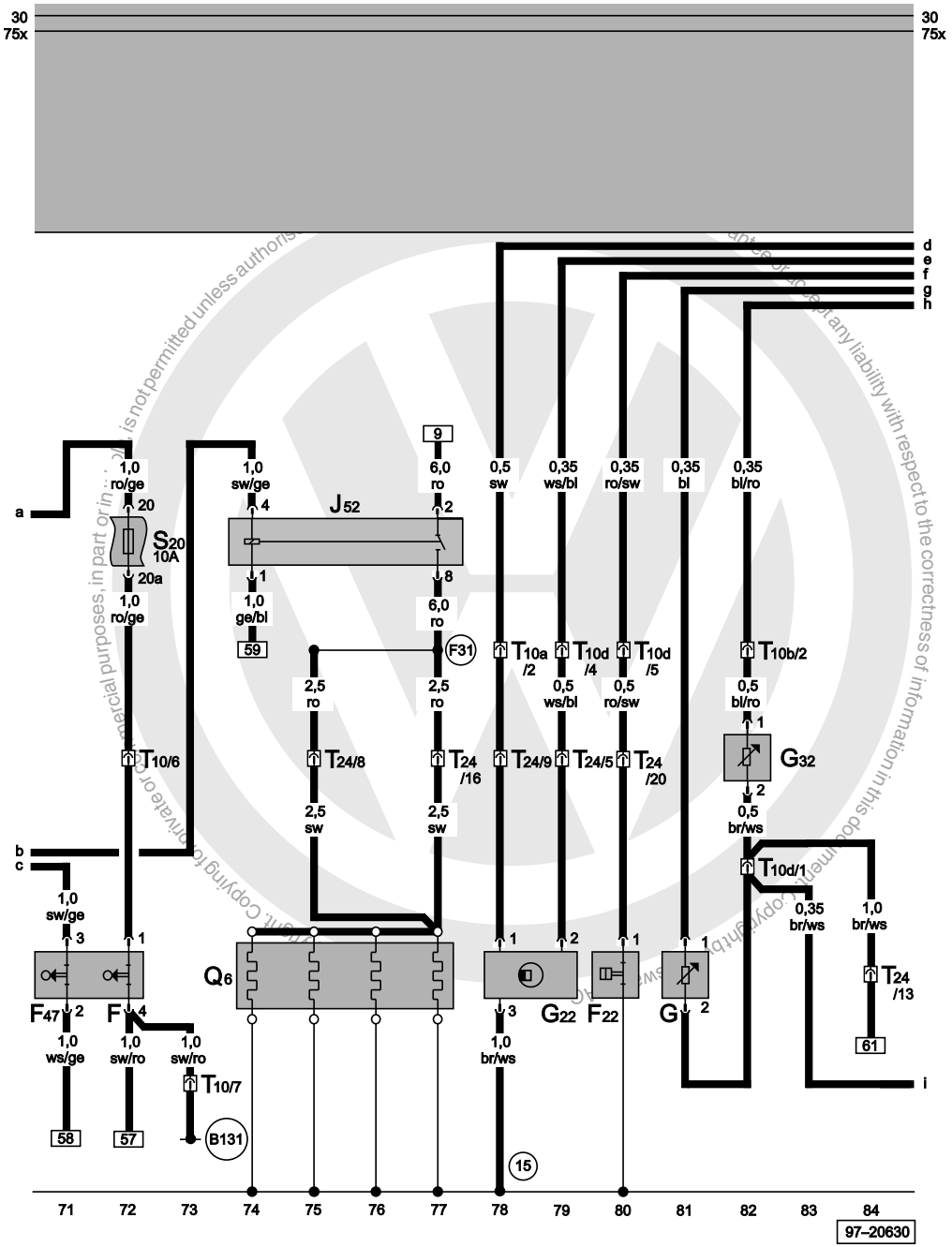

Brake light switch, speedometer sender, fuel gauge sender, coolant shortage indicator sender, engine glow plugs, oil pressure switch

F	Brake light switch (00526)
F22	Oil pressure switch (0.3 bar) (00772)
F47	Cruise control system brake pedal switch/diesel direct injection system (00629)
G	Fuel gauge sender
G22	Speedometer sender (Hall sender on gearbox)
G32	Coolant shortage indicator sender
J52	Glow plug relay, near relay station (01266)
Q6	Engine glow plugs
S20	Fuses on fuse holder
T10	10-pin connector, white, near relay station
T10a	10-pin connector, green, near relay station
T10b	10-pin connector, black, near relay station
T10d	10-pin connector, red, near relay station
T24	24-pin connector, black, on engine
15	Earth point, on cylinder head
B131	Connection (54), in interior wiring harness
F31	Connection (engine glow plugs), in diesel direct injection system wiring harness

ws	=	white
sw	=	black
ro	=	red
br	=	brown
gn	=	green
bl	=	blue
gr	=	grey
li	=	purple
ge	=	yellow
or	=	orange
rs	=	pink

satelettronica

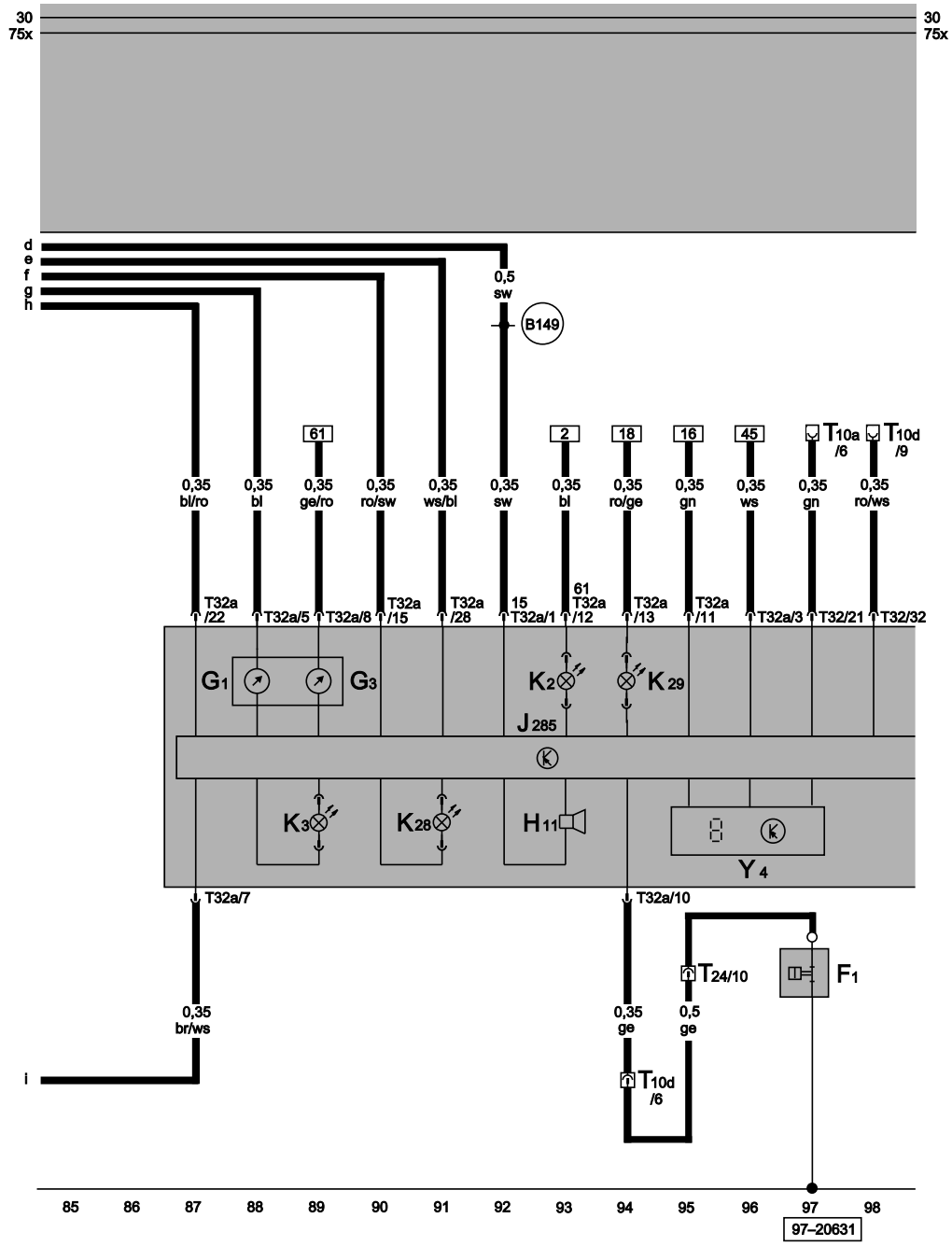

Dash panel insert, fuel gauge, coolant shortage and coolant temperature indicator, optical and acoustic oil pressure warning, odometer

F1	Oil pressure switch
G1	Fuel gauge
G3	Coolant temperature gauge
H11	Oil pressure warning buzzer
J285	Control unit with display in dash panel insert
K2	Alternator warning lamp
K3	Oil pressure warning lamp
K28	Coolant temperature/coolant shortage warning lamp
K29	Glow period warning lamp (00626)
T10a	10-pin connector, green, near relay station
T10d	10-pin connector, red, near relay station
T24	24-pin connector, black, on engine
T32	32-pin connector, black, on dash panel insert
T32a	32-pin connector, blue, on dash panel insert
Y4	Trip counter
B149	Positive connection 2 (15a), in interior wiring harness

ws	=	white
sw	=	black
ro	=	red
br	=	brown
gn	=	green
bl	=	blue
gr	=	grey
li	=	purple
ge	=	yellow
or	=	orange
rs	=	pink

Protected by copyright. Copying for private or commercial purposes, in part or in whole, is not permitted unless authorised by Volkswagen AG. Volkswagen AG does not guarantee or accept any liability with respect to the correctness of information in this document. Copyright by Volkswagen AG.
satelettronica

1.9 l/47 kW - naturally aspirated diesel engine, engine code AEF

From May 1997

Notes:

For information concerning

- Relay and fuse assignment
- Multi-pin connectors
- Control units and relays
- Earth connections

⇒ Overview of Fitting Locations!

For information concerning

- Fault Finding Programs

⇒ Guided Fault Finding

Protected by copyright. Copying for private or commercial purposes, in part or in whole, is not permitted unless authorised by Volkswagen AG. Volkswagen AG does not guarantee or accept any liability with respect to the correctness of information in this document. Copyright by Volkswagen AG.

satelettronica

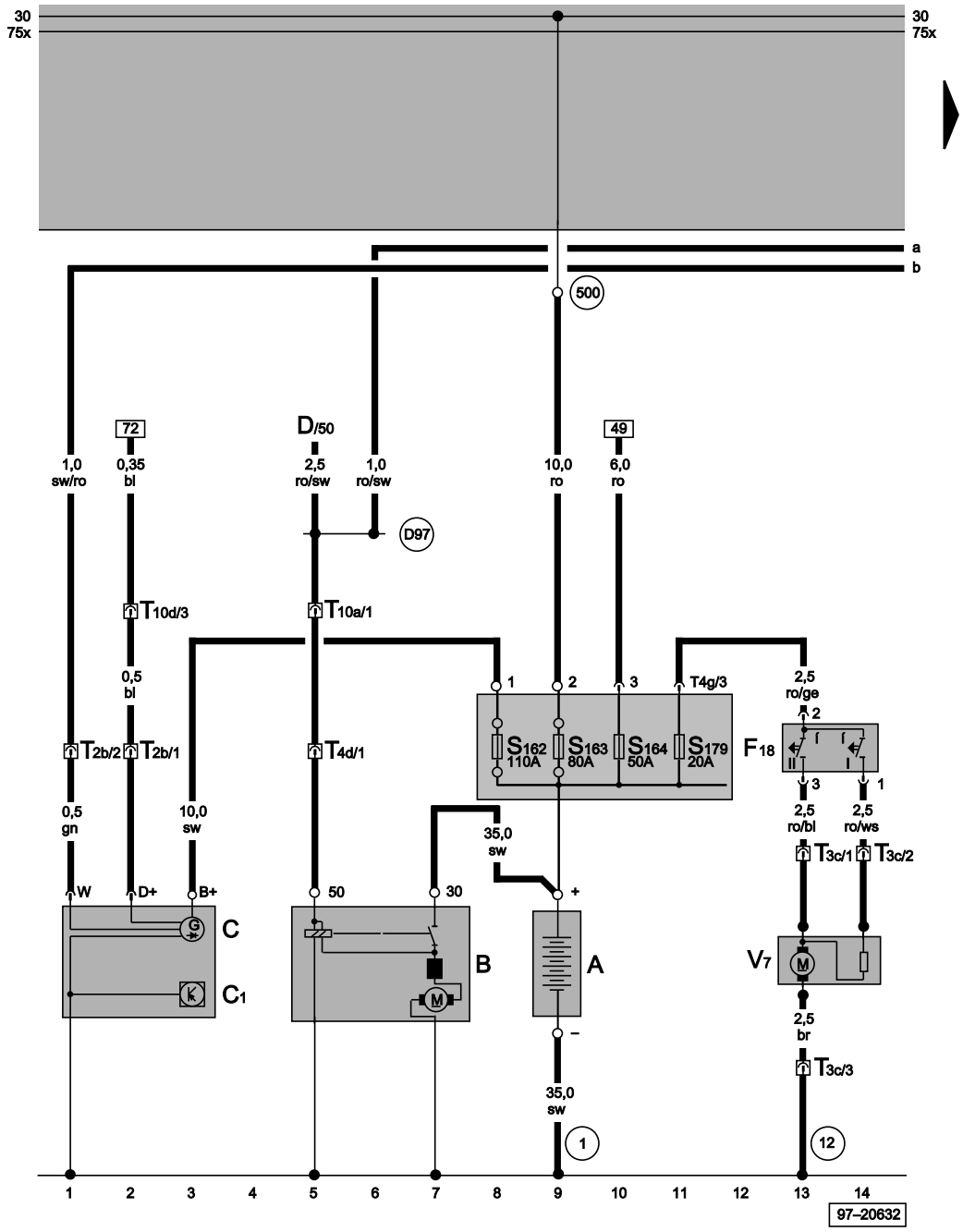

Battery, starter, alternator, radiator fan

A	Battery
B	Starter
C	Alternator
C1	Voltage regulator
D	Ignition/starter switch
F18	Thermal switch for radiator fan
S162	Fuse 1 (30), on battery fuse holder
S163	Fuse 2 (30), on battery fuse holder
S164	Fuse 3 (30), on battery fuse holder
S179	Fuse 7 (30), on battery fuse holder
T2b	2-pin connector, black, near starter
T3c	3-pin connector, black, on radiator fan
T4d	4-pin connector, black, on gearbox
T4g	4-pin connector, black, near battery
T10a	10-pin connector, green, near relay station
T10d	10-pin connector, red, near relay station
V7	Radiator fan
1	Earth strap, battery - body
12	Earth point, on left in engine compartment
500	Screw connection 1 (30), on relay plate
D97	Connection (50), in engine compartment right wiring harness

ws	=	white
sw	=	black
ro	=	red
br	=	brown
gn	=	green
bl	=	blue
gr	=	grey
li	=	purple
ge	=	yellow
or	=	orange
rs	=	pink

Protected by copyright. Copying for private or commercial purposes, in part or in whole, is not permitted unless authorised by Volkswagen AG. Volkswagen AG does not guarantee or accept any liability with respect to the correctness of information in this document. Copyright by Volkswagen AG.
satelettronica

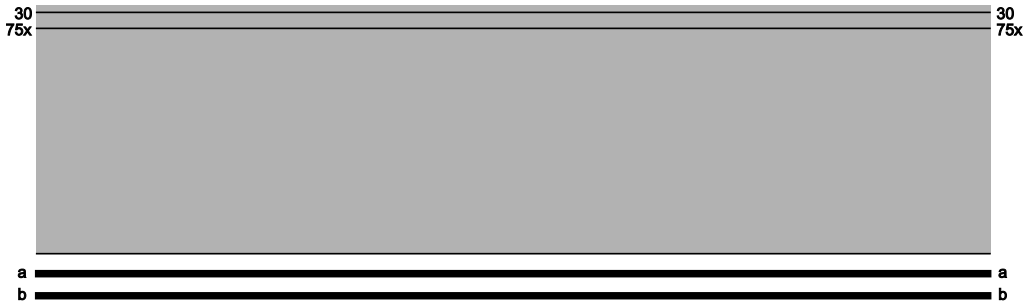

Idling speed boost valve, exhaust gas recirculation valve, fuel shut-off valve

J362	Immobilizer control unit, next to steering column
J366	Fuel shut-off valve control unit, on diesel injection pump
N18	Exhaust gas recirculation valve (01265)
N109	Fuel shut-off valve
N177	Idling speed boost valve (01168)
S3	Fuses on fuse holder
T6	6-pin connector, black, on immobilizer control unit
T10a	10-pin connector, green, near relay station
T10d	10-pin connector, red, near relay station
T19a	19-pin connector, black, on engine
B135	Connection 1 (15a), in interior wiring harness
D52	Positive connection (15a), in engine compartment wiring harness

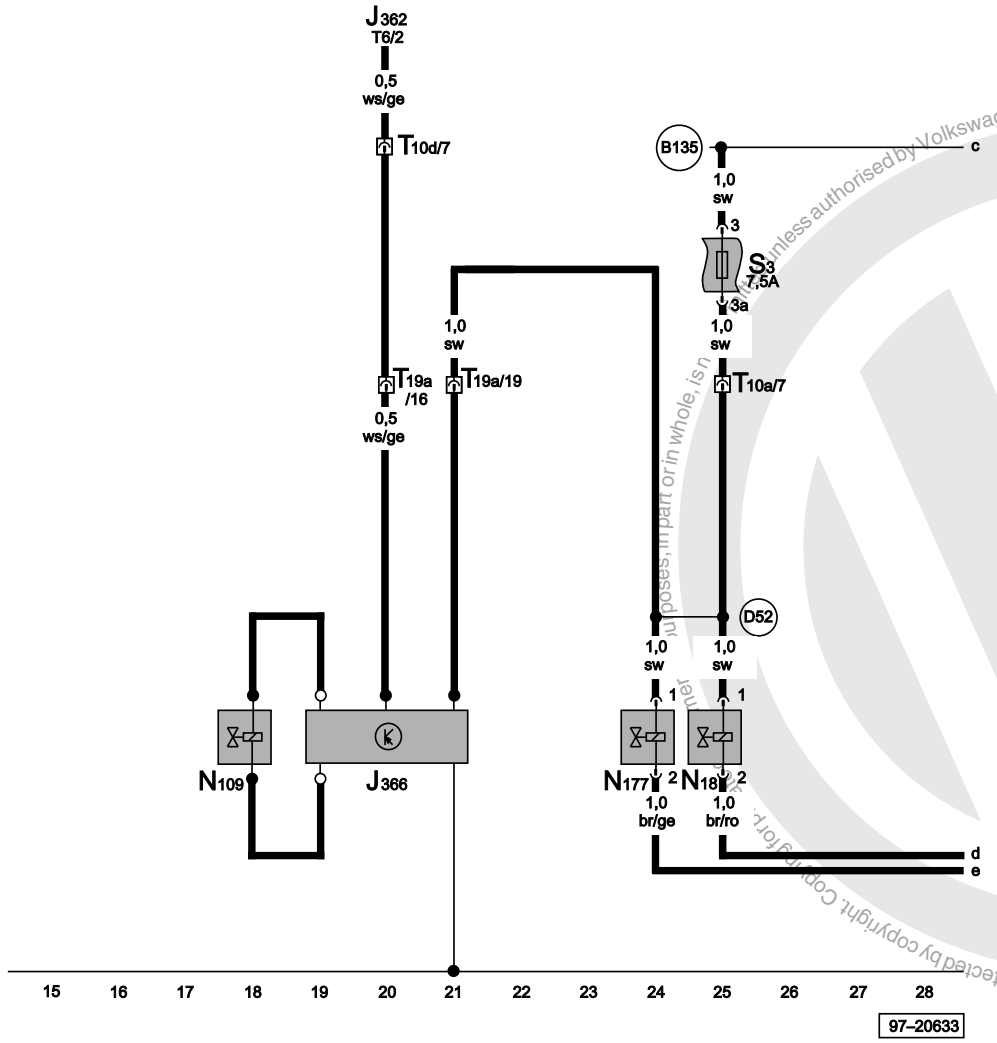

ws	=	white
sw	=	black
ro	=	red
br	=	brown
gn	=	green
bl	=	blue
gr	=	grey
li	=	purple
ge	=	yellow
or	=	orange
rs	=	pink

Protected by copyright. Copying for private or commercial purposes, in part or in whole, is not permitted unless authorised by Volkswagen AG. Volkswagen AG does not guarantee or accept any liability with respect to the correctness of information in this document. Copyright by Volkswagen AG.
satelettronica

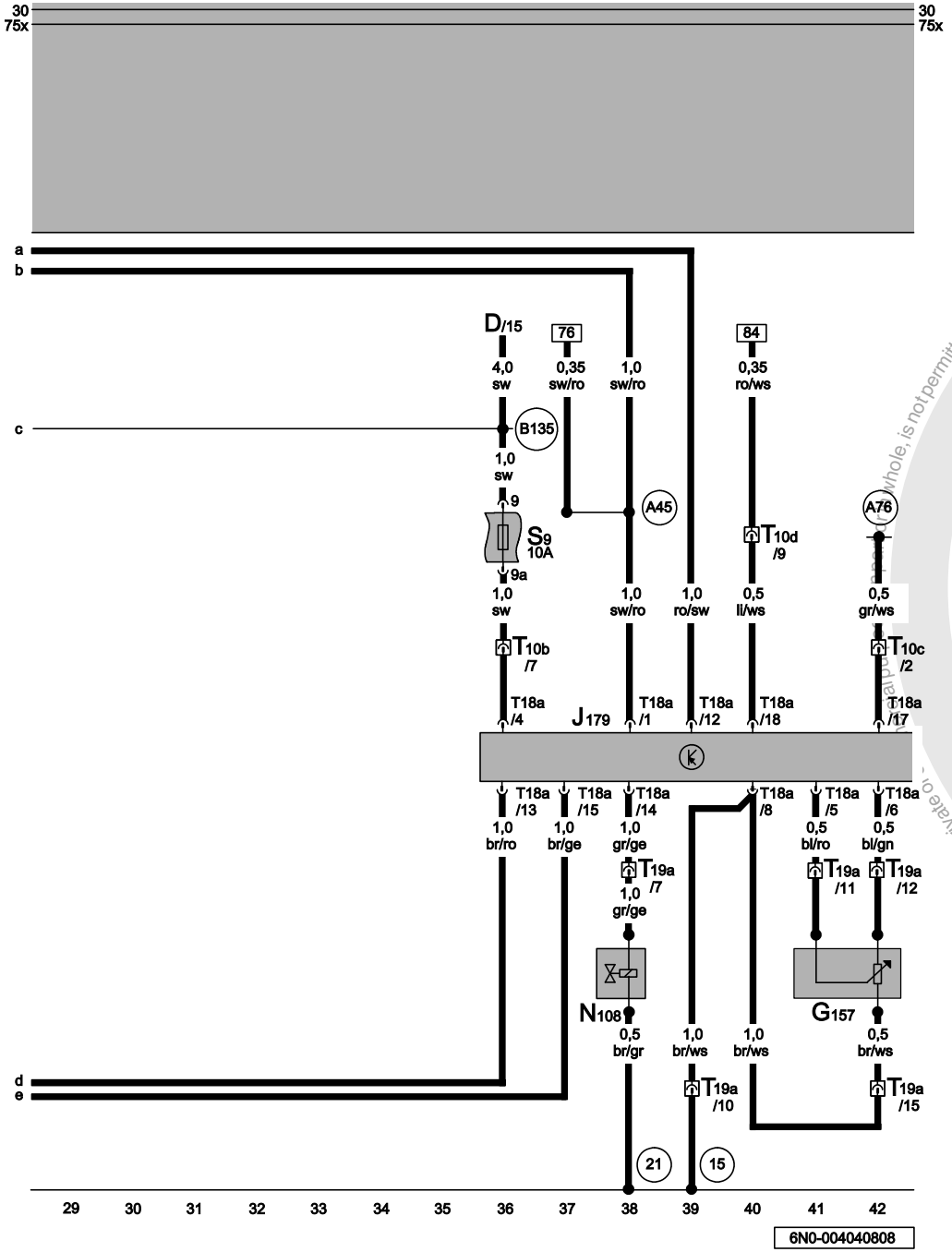

Automatic glow period control unit, commencement of injection valve, load signal potentiometer

D	Ignition/starter switch
G157	Load signal potentiometer (01052)
J179	Automatic glow period control unit, above relay plate
N108	Commencement of injection valve (01269)
S9	Fuses on fuse holder
T10b	10-pin connector, black, near relay station
T10c	10-pin connector, blue, near relay station
T10d	10-pin connector, red, near relay station
T18a	18-pin connector, black, on automatic glow period control unit
T19a	19-pin connector, black, on engine
15	Earth point, on cylinder head
21	Earth point, near diesel injection pump
A45	Connection (RPM signal), in dash panel wiring harness
A76	Connection (K-diagnosis wire), in dash panel wiring harness
B135	Connection 1 (15a), in interior wiring harness
D52	Positive connection (15a), in engine compartment wiring harness

ws	=	white
sw	=	black
ro	=	red
br	=	brown
gn	=	green
bl	=	blue
gr	=	grey
li	=	purple
ge	=	yellow
or	=	orange
rs	=	pink

Protected by copyright. Copying for private or commercial purposes, in part or in whole, is not permitted unless authorised by Volkswagen AG. Volkswagen AG does not guarantee or accept any liability with respect to the correctness of information in this document. Copyright by Volkswagen AG.
satelettronica

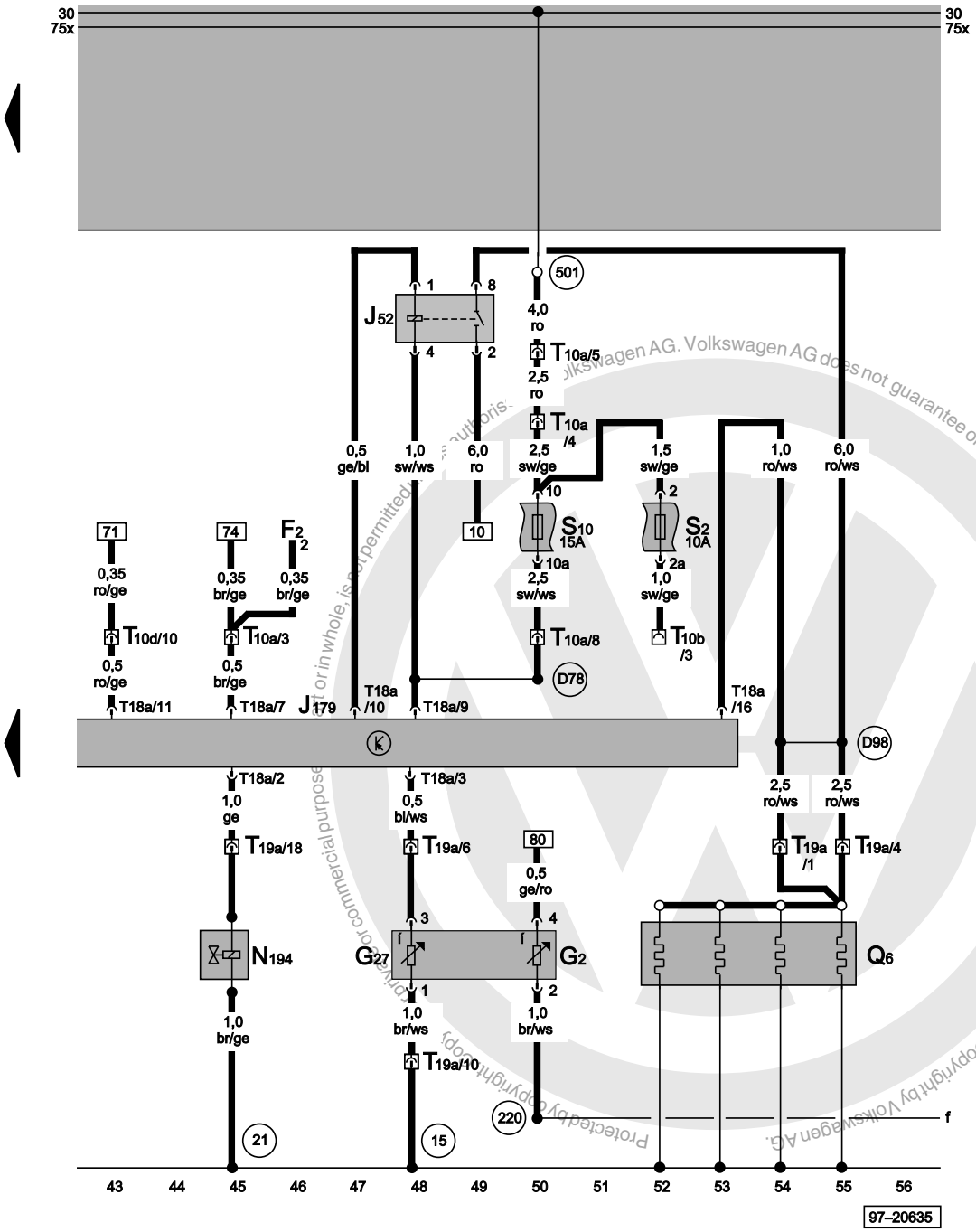

Automatic glow period control unit, engine temperature sender, coolant temperature sender, full load stop valve, glow plugs, glow plug relay

F2	Driver door contact switch (01169)
G2	Coolant temperature sender
G27	Engine temperature sender (01204)
J52	Glow plug relay, near relay station (01266)
J179	Automatic glow period control unit, near above relay plate
N194	Full load stop valve (01167)
Q6	Glow plug
S2	Fuses on fuse holder
S10	Fuses on fuse holder
T10a	10-pin connector, green, near relay station
T10b	10-pin connector, black, near relay station
T10d	10-pin connector, red, near relay station
T18a	18-pin connector, black, on automatic glow period control unit
T19a	19-pin connector, black, on engine
15	Earth point, on cylinder head
21	Earth point, near diesel injection pump
220	Earth connection (sender earth), in engine wiring harness
501	Screw connection 2 (30), on relay plate
D78	Positive connection 1 (30a), in engine compartment wiring harness
D98	Connection (glow plugs), in engine compartment wiring harness

ws	=	white
sw	=	black
ro	=	red
br	=	brown
gn	=	green
bl	=	blue
gr	=	grey
li	=	purple
ge	=	yellow
or	=	orange
rs	=	pink

satelettronica

Protected by copyright. Copyright by Volkswagen AG. Volkswagen AG does not guarantee or accept any liability with respect to the correctness of information in this document. Copying for commercial purposes, in whole or in part, is not permitted without the authorisation of Volkswagen AG.

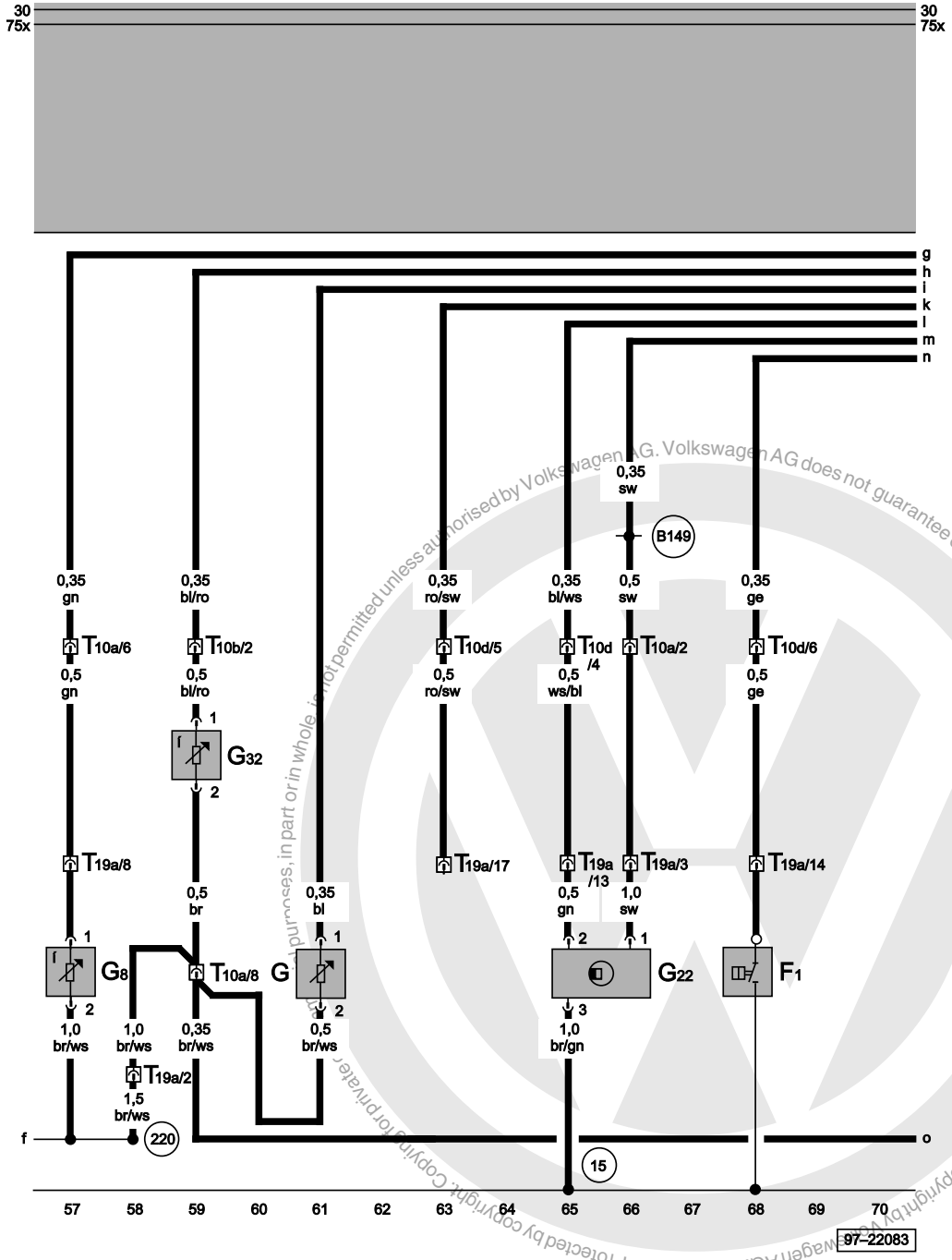

Coolant shortage indicator sender, fuel gauge sender, speedometer sender, oil temperature sender, oil pressure switch

F1	Oil pressure switch
G	Fuel gauge sender
G8	Oil temperature sender
G22	Speedometer sender (Hall sender on gearbox)
G32	Coolant shortage indicator sender
T10a	10-pin connector, green, near relay station
T10b	10-pin connector, black, near relay station
T10d	10-pin connector, red, near relay station
T19a	19-pin connector, black, on engine
15	Earth point, on cylinder head
220	Earth connection (sender earth), in engine wiring harness
B149	Positive connection 2 (15a), in interior wiring harness

ws	=	white
sw	=	black
ro	=	red
br	=	brown
gn	=	green
bl	=	blue
gr	=	grey
li	=	purple
ge	=	yellow
or	=	orange
rs	=	pink

Protected by copyright. Copying for private or commercial purposes, in part or in whole, is not permitted unless authorised by Volkswagen AG. Volkswagen AG does not guarantee or accept any liability with respect to the correctness of information in this document. Copyright by Volkswagen AG.

satelettronica

© Volkswagen AG does not guarantee or assume any liability with respect to the accuracy of information in this document. Copyright by Volkswagen AG.

Dash panel insert, fuel gauge, coolant shortage and coolant temperature indicator, optical and acoustic oil pressure warning, alternator warning lamp, glow period warning lamp, odometer

G1	Fuel gauge
G3	Coolant temperature gauge
G5	Rev. counter
H11	Oil pressure warning buzzer
J285	Control unit with display in dash panel insert
K2	Alternator warning lamp
K3	Oil pressure warning lamp
K28	Coolant temperature/coolant shortage warning lamp
K29	Glow period warning lamp (00626)
T10	10-pin connector, white, near relay station
T19a	19-pin connector, black, on engine
T32	32-pin connector, black, on dash panel insert
T32a	32-pin connector, blue, on dash panel insert
Y4	Trip counter

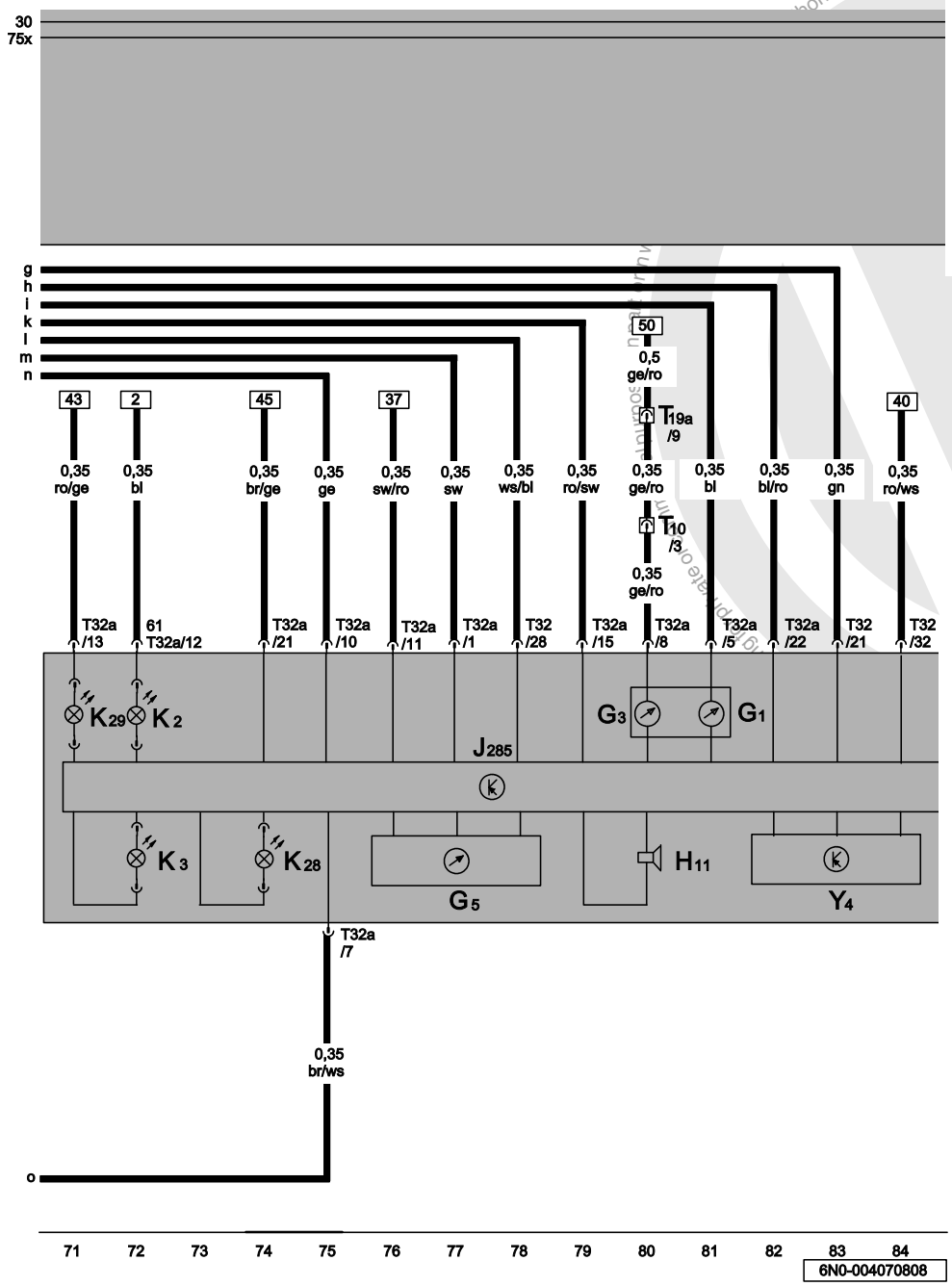

ws	=	white
sw	=	black
ro	=	red
br	=	brown
gn	=	green
bl	=	blue
gr	=	grey
li	=	purple
ge	=	yellow
or	=	orange
rs	=	pink

satelettronica

Protected by copyright. Copying for private or commercial purposes, in part or in whole, is not permitted unless authorised by Volkswagen AG. Volkswagen AG does not guarantee or accept any liability with respect to the correctness of information in this document. Copyright by Volkswagen AG.

⇒ 1.4 litre Motronic/44 kW, engine codes AEX with automatic gearbox
⇒ 1.6 litre 1AV/55 kW, engine codes AEE with automatic gearbox
From May 1997

For alternatives to relay and fuse positions as well as multi-pin connector wiring - see "Fitting locations" section.

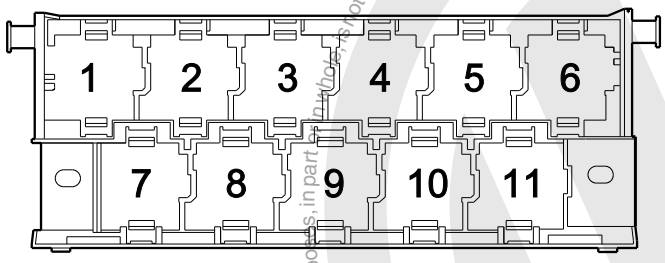

97-22850

Fuse colours

30 A - green
25 A - white
20 A - yellow
15 A - blue
10 A - red
7.5 A - brown
5 A - beige
3 A - lilac

satelettronica

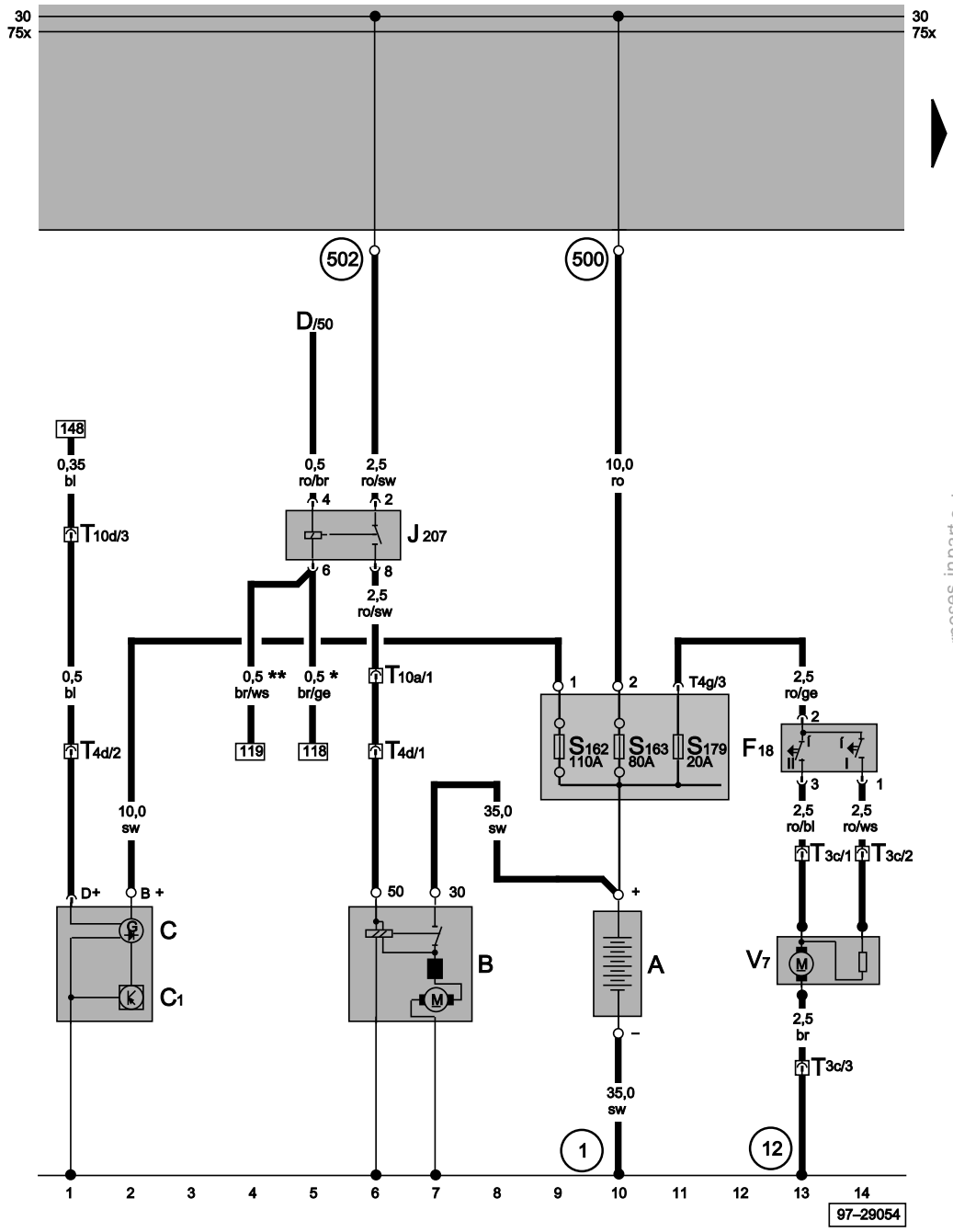

Battery, starter, alternator, radiator fan, starter inhibitor relay

A	Battery
B	Starter
C	Alternator
C1	Voltage regulator
D	Ignition/starter switch
F18	Radiator fan thermo-switch
J207	Starter inhibitor relay, next to relay plate
S162	Fuse -1- (30), in battery fuse box
S163	Fuse -2- (30), in battery fuse box
S179	Fuse -7- (30), in battery fuse box
T3c	3-pin connector, black, on radiator fan
T4d	4-pin connector, black, on gearbox
T4g	4-pin connector, black
T10a	10-pin connector, green, near relay station
T10d	10-pin connector, red, near relay station
V7	Radiator fan
(1)	Earth strap, battery - body
(12)	Earth point, in engine compartment, left
(500)	Screw connection -1- (30), on relay plate
(502)	Screw connection -1- (30a), on relay plate
*	Left-hand drive only
**	Right-hand drive only

ws	=	white
sw	=	black
ro	=	red
br	=	brown
gn	=	green
bl	=	blue
gr	=	grey
li	=	purple
ge	=	yellow
or	=	orange
rs	=	pink

Protected by copyright. Copying for private or commercial purposes, in part or in whole, is not permitted unless authorised by Volkswagen AG. Volkswagen AG does not guarantee or accept any liability with respect to the correctness of information in this document. Copyright by Volkswagen AG.
satelettronica

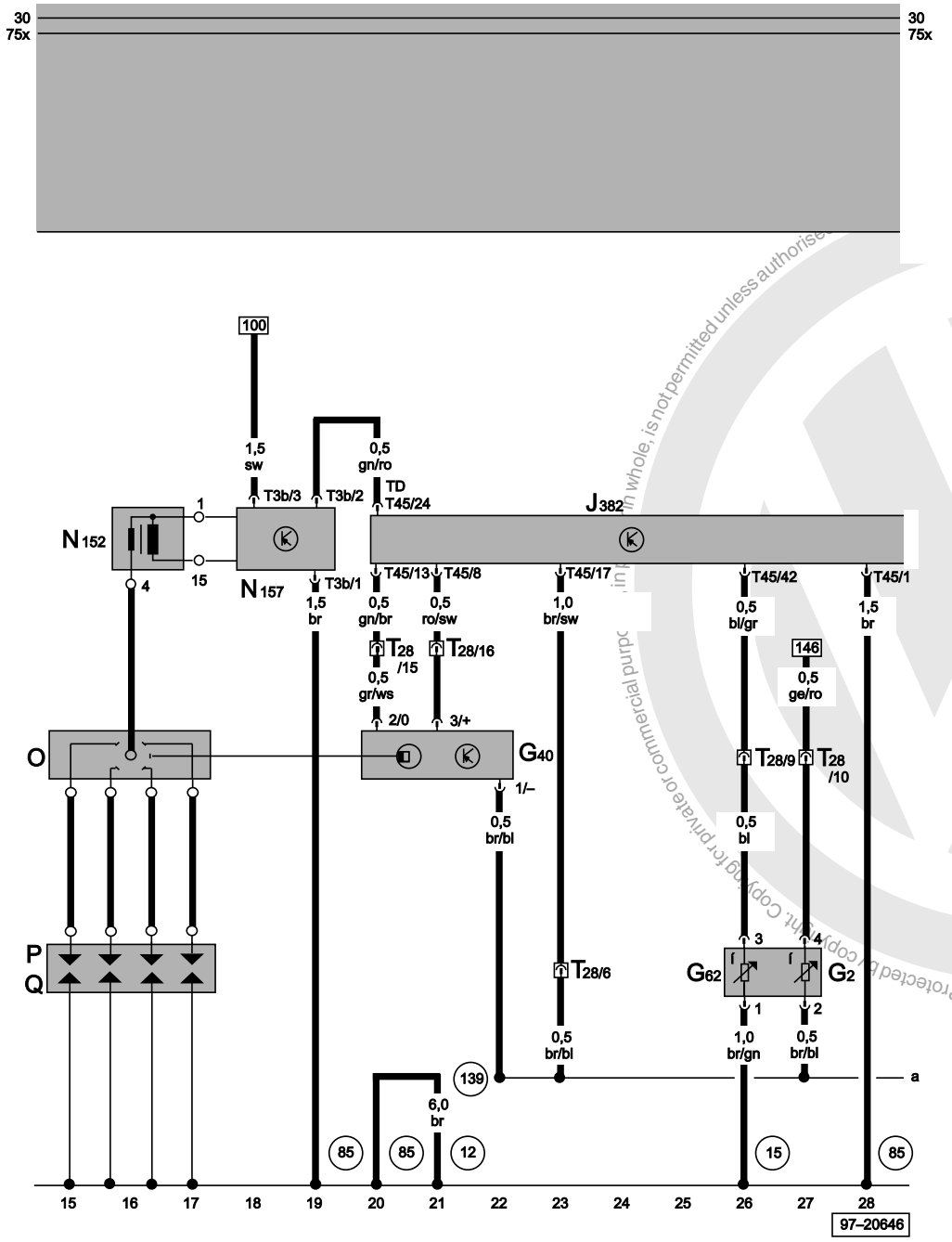

1AV control unit (injection system), ignition system, Hall sender, coolant temperature sender

G2	Coolant temperature sender
G40	Hall sender
G62	Coolant temperature sender
J382	1AV control unit (injection system), right in plenum chamber
N152	Ignition transformer
N157	Ignition transformer output stage
O	Ignition distributor
P	Spark plug connector
Q	Flame plug
T3b	3-pin connector, black, on ignition transformer output stage
T28	28-pin connector, black, on engine
T45	45-pin connector, black
12	Earth point, in engine compartment, left
15	Earth point, on cylinder head
85	Earth connection -1-, in engine compartment wiring harness
139	Earth connection (sender earth), in Motronic wiring harness

ws	=	white
sw	=	black
ro	=	red
br	=	brown
gn	=	green
bl	=	blue
gr	=	grey
li	=	purple
ge	=	yellow
or	=	orange
rs	=	pink

AG. Volkswagen AG does not guarantee or assume any liability with respect to the correctness of information in this document. Copyright by Volkswagen AG. Protected by copyright. Copying for private or commercial purpose, in whole, is not permitted unless authorised.
satelettronica

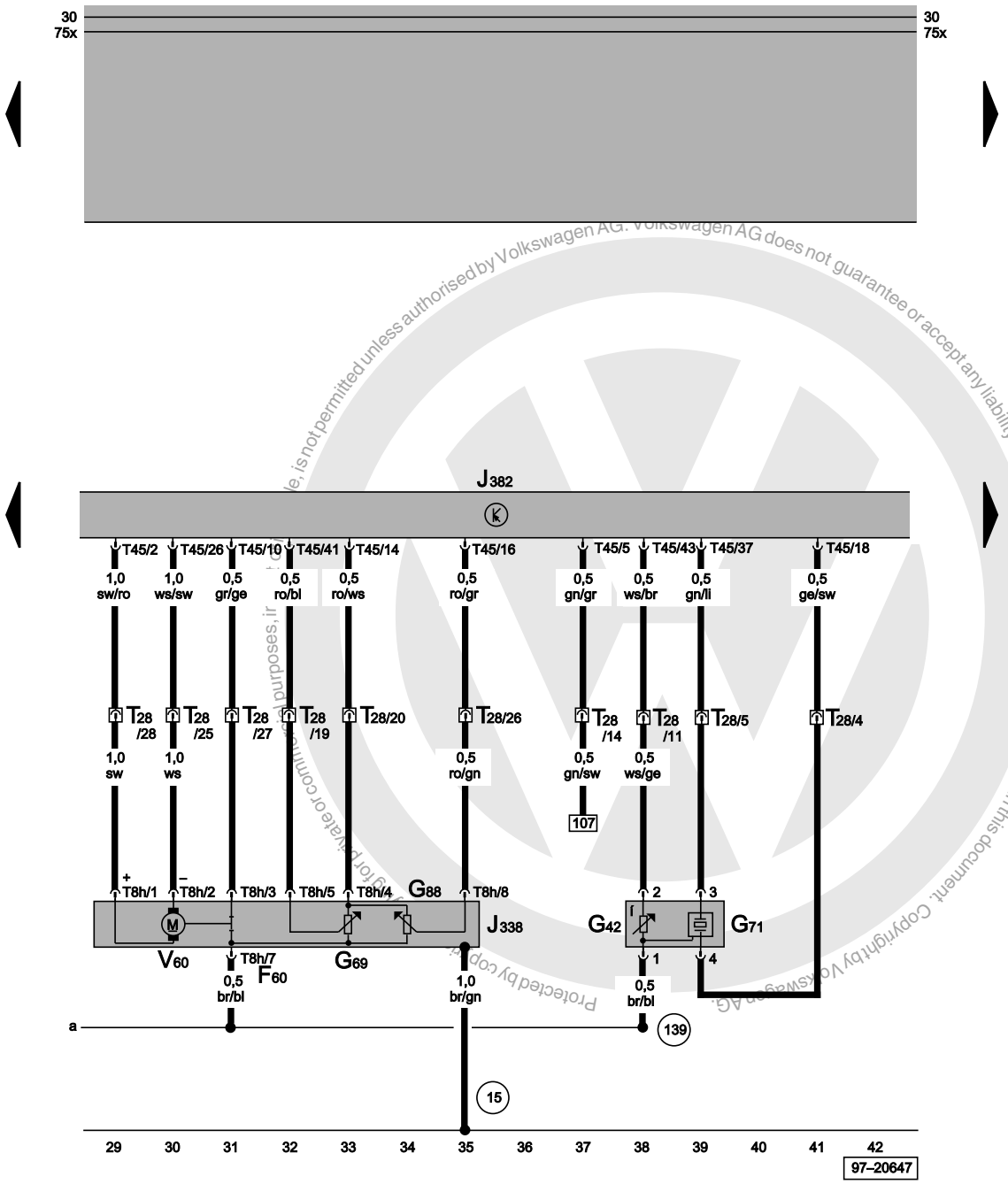

1AV control unit (injection system), throttle valve control part, intake air temperature sender, intake manifold pressure sender

F60	Idling switch
G42	Intake air temperature sender
G69	Throttle valve potentiometer
G71	Intake manifold pressure sender
G88	Throttle valve positioner potentiometer
J338	Throttle valve control unit, near intake manifold
J382	1AV control unit (injection system), right in plenum chamber
T8h	8-pin connector, black, on throttle valve control unit
T28	28-pin connector, black, on engine
T45	45-pin connector, black
V60	Throttle valve positioner
15	Earth point, on cylinder head
139	Earth connection (sender earth), in Motronic wiring harness

ws	=	white
sw	=	black
ro	=	red
br	=	brown
gn	=	green
bl	=	blue
gr	=	grey
li	=	purple
ge	=	yellow
or	=	orange
rs	=	pink

Protected by copyright. Copyright by Volkswagen AG. Volkswagen AG does not guarantee or accept any liability with respect to the correctness of information in this document. Copyright by Volkswagen AG. Reproduction, in whole or in part, is not permitted unless authorised by Volkswagen AG. Volkswagen AG does not guarantee or accept any liability with respect to the correctness of information in this document. Copyright by Volkswagen AG.

satelettronica

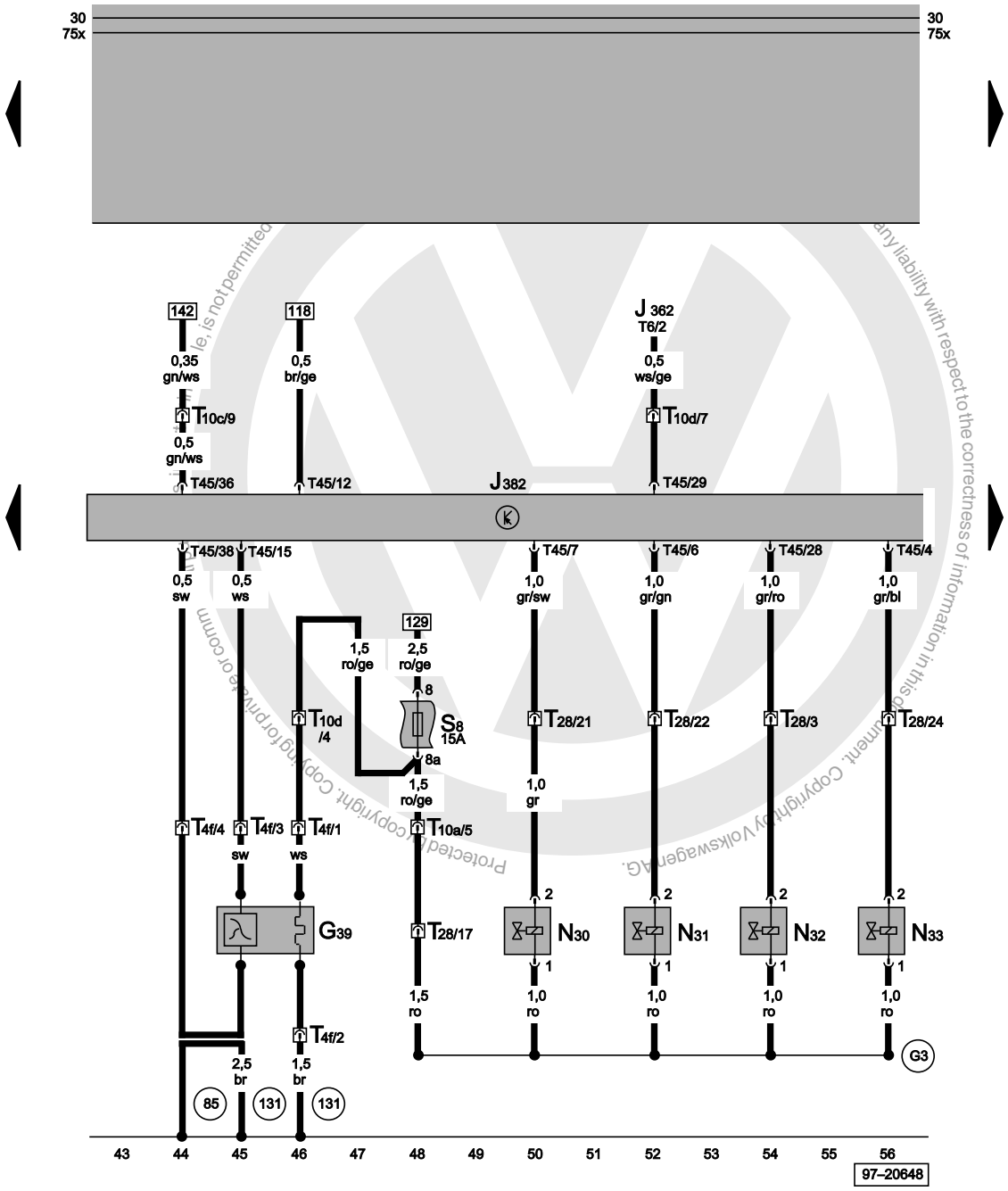

1AV control unit (injection system), injectors, Lambda probe

G39	Lambda probe
J362	Immobilizer control unit, next to steering column
J382	1AV control unit (injection system), right in plenum chamber
N30	Injector, cylinder 1
N31	Injector, cylinder 2
N32	Injector, cylinder 3
N33	Injector, cylinder 4
S8	Fuse in relay plate fuse box
T4f	4-pin connector, black, on gearbox
T6	6-pin connector, black, on immobilizer control unit
T10a	10-pin connector, green, near relay station
T10c	10-pin connector, blue, near relay station
T10d	10-pin connector, red, near relay station
T28	28-pin connector, black, on engine
T45	45-pin connector, black
85	Earth connection -1-, in engine compartment wiring harness
131	Earth connection -3-, in engine compartment wiring harness
G3	Positive (+) connection in cable sleeve - injectors

ws	=	white
sw	=	black
ro	=	red
br	=	brown
gn	=	green
bl	=	blue
gr	=	grey
li	=	purple
ge	=	yellow
or	=	orange
rs	=	pink

satelettronica

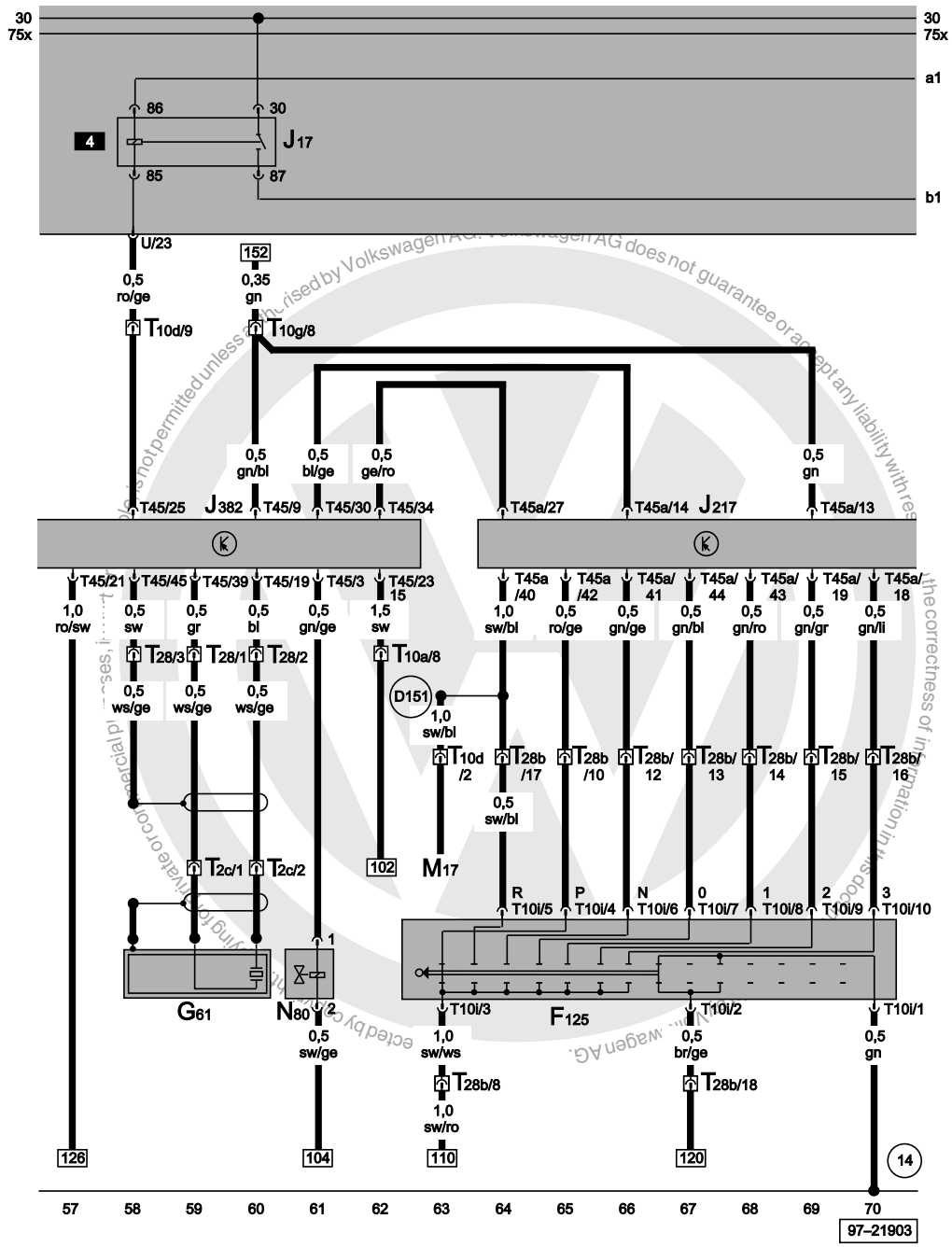

1AV control unit (injection system), knock sensor, activated charcoal filter system, automatic gearbox control unit, multi-function switch

F125	Multi-function switch
G61	Knock sensor I
J17	Fuel pump relay
J217	Automatic gearbox control unit, on gearbox
J382	1AV control unit (injection system), right in plenum chamber
M17	Reversing light bulb, right
N80	Activated charcoal filter system solenoid valve I
T2c	2-pin connector, black, on engine
T10a	10-pin connector, green, near relay station
T10d	10-pin connector, red, near relay station
T10g	10-pin connector, brown, near relay station
T10i	10-pin connector, black, on multi-function switch
T28	28-pin connector, black, on engine
T28b	28-pin connector, black, on gearbox
T45	45-pin connector, black
T45a	45-pin connector, black
14	Earth point, on gearbox
D151	Connection (RF), in engine compartment wiring harness

ws	=	white
sw	=	black
ro	=	red
br	=	brown
gn	=	green
bl	=	blue
gr	=	grey
li	=	purple
ge	=	yellow
or	=	orange
rs	=	pink

satelettronica

Automatic gearbox control unit, solenoid valves, solenoid valve series resistor

G93	Gearbox oil temperature sender
J217	Automatic gearbox control unit, on gearbox
N207	Solenoid valve series resistance, automatic gearbox
N88	Solenoid valve 1
N89	Solenoid valve 2
N90	Solenoid valve 3
N91	Solenoid valve 4
N93	Solenoid valve 6
T2m	2-pin connector, black, on gearbox
T8g	8-pin connector, black, on gearbox
T28b	28-pin connector, black, on gearbox
T45a	45-pin connector, black

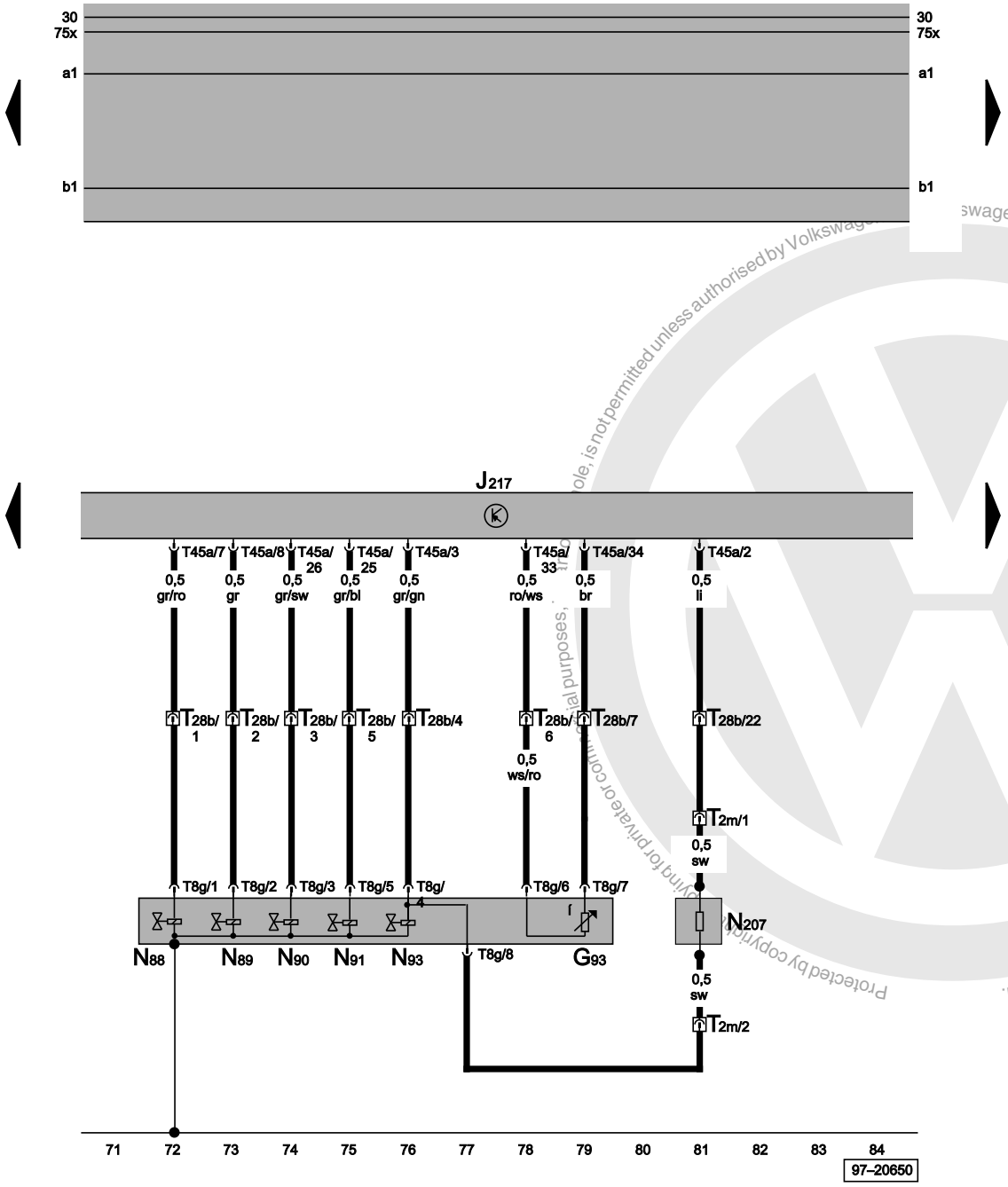

ws	=	white
sw	=	black
ro	=	red
br	=	brown
gn	=	green
bl	=	blue
gr	=	grey
li	=	purple
ge	=	yellow
or	=	orange
rs	=	pink

Protected by copyright. Copying for private or commercial purposes, in whole, is not permitted unless authorised by Volkswagen AG. Volkswagen AG does not guarantee or accept any liability with respect to the correctness of information in this document. Copyright by Volkswagen AG.
satelettronica

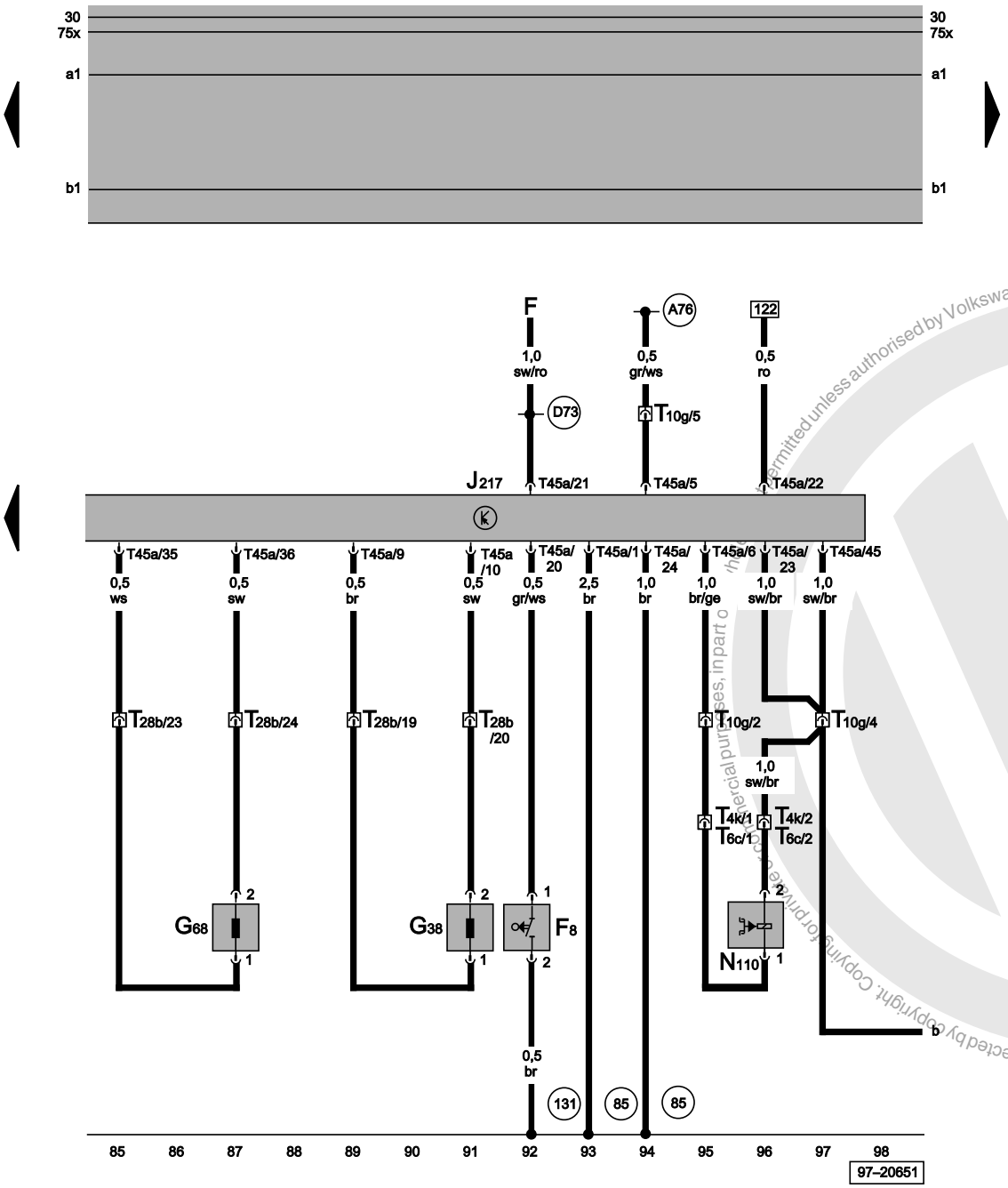

Automatic gearbox control unit, road speed sender, gearbox speed sender, selector lever lock solenoid valve, kick-down switch

F	Brake light switch
F8	Kick-down switch
G38	Gearbox speed sender
G68	Road speed sender
J217	Automatic gearbox control unit
N110	Selector lever lock solenoid
T4k	4-pin connector, black, left-hand drive only
T6c	6-pin connector, black, right-hand drive only
T10g	10-pin connector, brown, near relay station
T28b	28-pin connector, black, on gearbox
T45a	45-pin connector, black
85	Earth connection -1-, in engine compartment wiring harness
131	Earth connection -2-, in engine compartment wiring harness
A76	Connection (diagnosis wire K), in dash panel wiring harness
D73	Positive connection (54), in engine compartment wiring harness

ws	=	white
sw	=	black
ro	=	red
br	=	brown
gn	=	green
bl	=	blue
gr	=	grey
li	=	purple
ge	=	yellow
or	=	orange
rs	=	pink

satelettronica

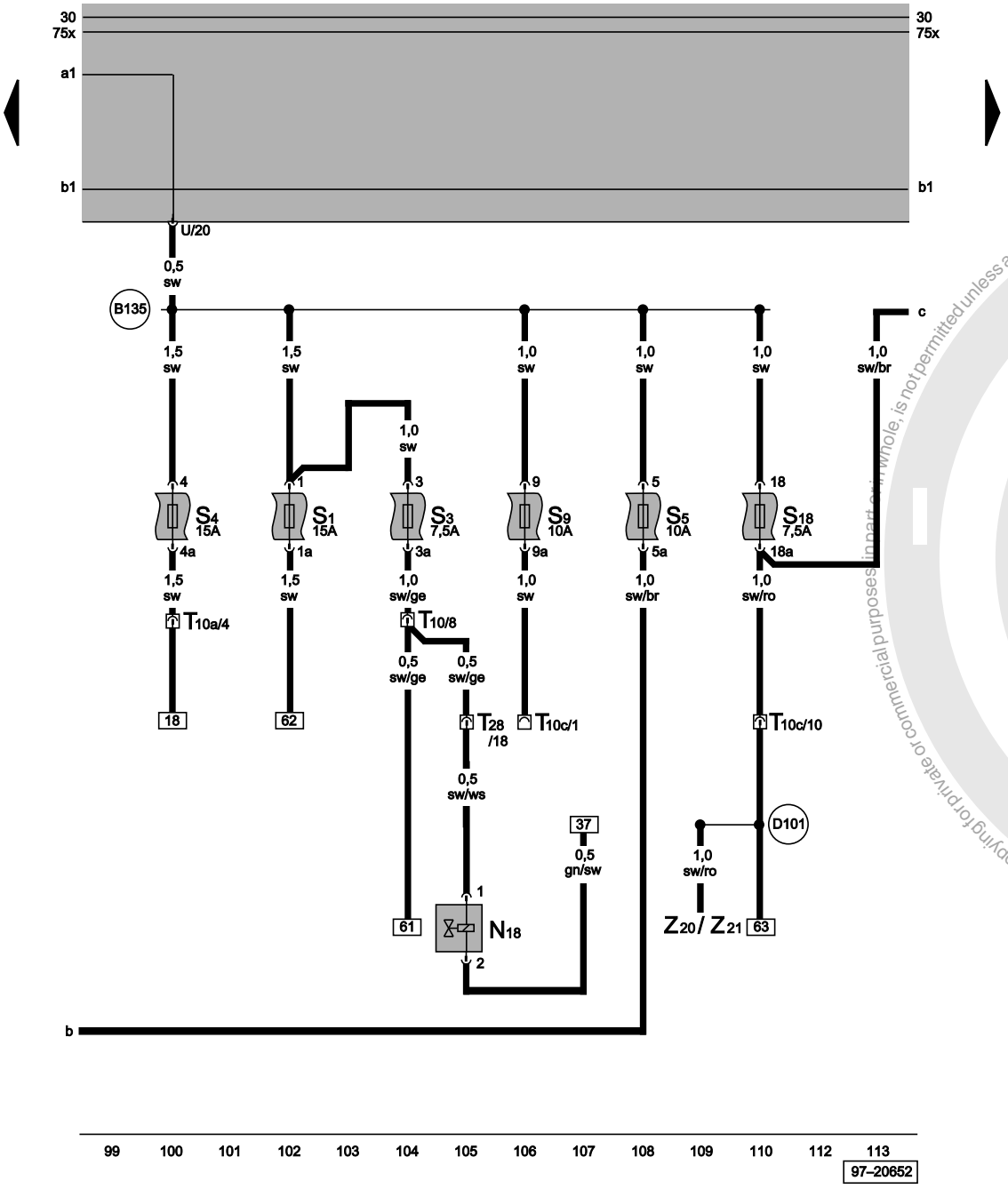

Exhaust gas recirculation valve

N18	Exhaust gas recirculation valve
S1	Fuse in relay plate fuse box
S3	Fuse in relay plate fuse box
S4	Fuse in relay plate fuse box
S5	Fuse in relay plate fuse box
S9	Fuse in relay plate fuse box
S18	Fuse in relay plate fuse box
T10	10-pin connector, white, near relay station
T10a	10-pin connector, green, near relay station
T10c	10-pin connector, blue, near relay station
T28	28-pin connector, black, on engine
Z20	Heater element, left washer jet
Z21	Heater element, right washer jet
B135	Connection -1- (15a), in interior wiring harness
D101	Connection -1-, in engine compartment wiring harness

ws	=	white
sw	=	black
ro	=	red
br	=	brown
gn	=	green
bl	=	blue
gr	=	grey
li	=	purple
ge	=	yellow
or	=	orange
rs	=	pink

Protected by copyright. Copying for private or commercial purposes, in part or in whole, is not permitted unless authorised by Volkswagen AG. Volkswagen AG does not guarantee or assume any liability with respect to the correctness of information in this document. Copyright by Volkswagen AG.
satelettronica

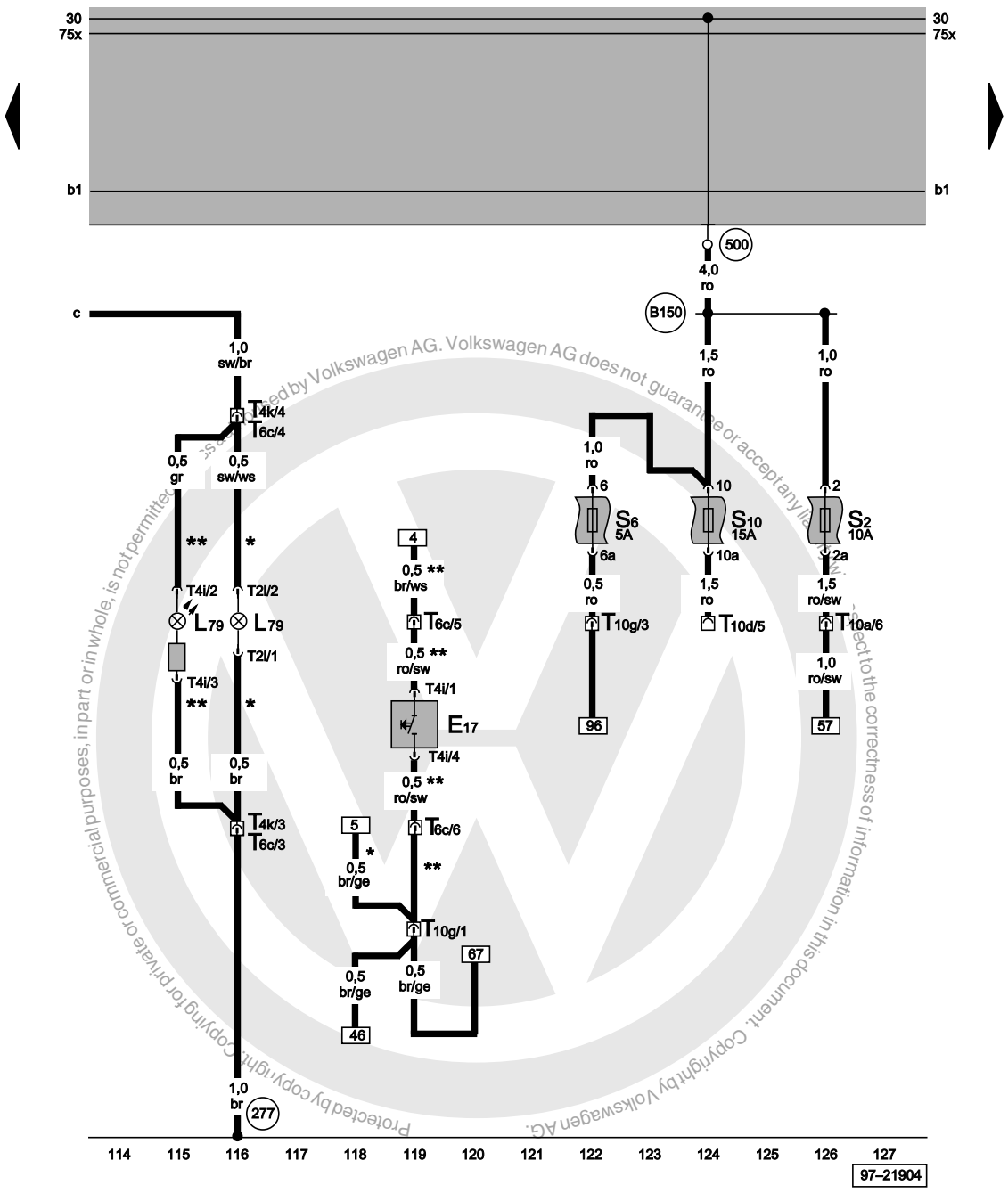

Starten inhibitor switch, selector lever illumination

E17	Starter inhibitor and reversing lights switch
L79	Selector lever illumination
S2	Fuse in relay plate fuse box
S6	Fuse in relay plate fuse box
S10	Fuse in relay plate fuse box
T21	2-pin connector, black, near selector lever
T4i	4-pin connector, black, near selector lever
T4k	4-pin connector, black, left-hand drive only
T6c	6-pin connector, black, right-hand drive only
T10a	10-pin connector, green, near relay station
T10d	10-pin connector, red, near relay station
T10g	10-pin connector, brown, near relay station
277	Earth connection -3-, in interior wiring harness
501	Screw connection -2- (30), on relay plate
B150	Positive connection -2- (30a), in interior wiring harness
*	Left-hand drive only
**	Right-hand drive only

ws	=	white
sw	=	black
ro	=	red
br	=	brown
gn	=	green
bl	=	blue
gr	=	grey
li	=	purple
ge	=	yellow
or	=	orange
rs	=	pink

Protected by copyright by Volkswagen AG. Volkswagen AG does not guarantee or accept any liability with respect to the correctness of information in this document. Copyright by Volkswagen AG. Protected by copyright. Copying for private or commercial purposes, in part or in whole, is not permitted.

satelettronica

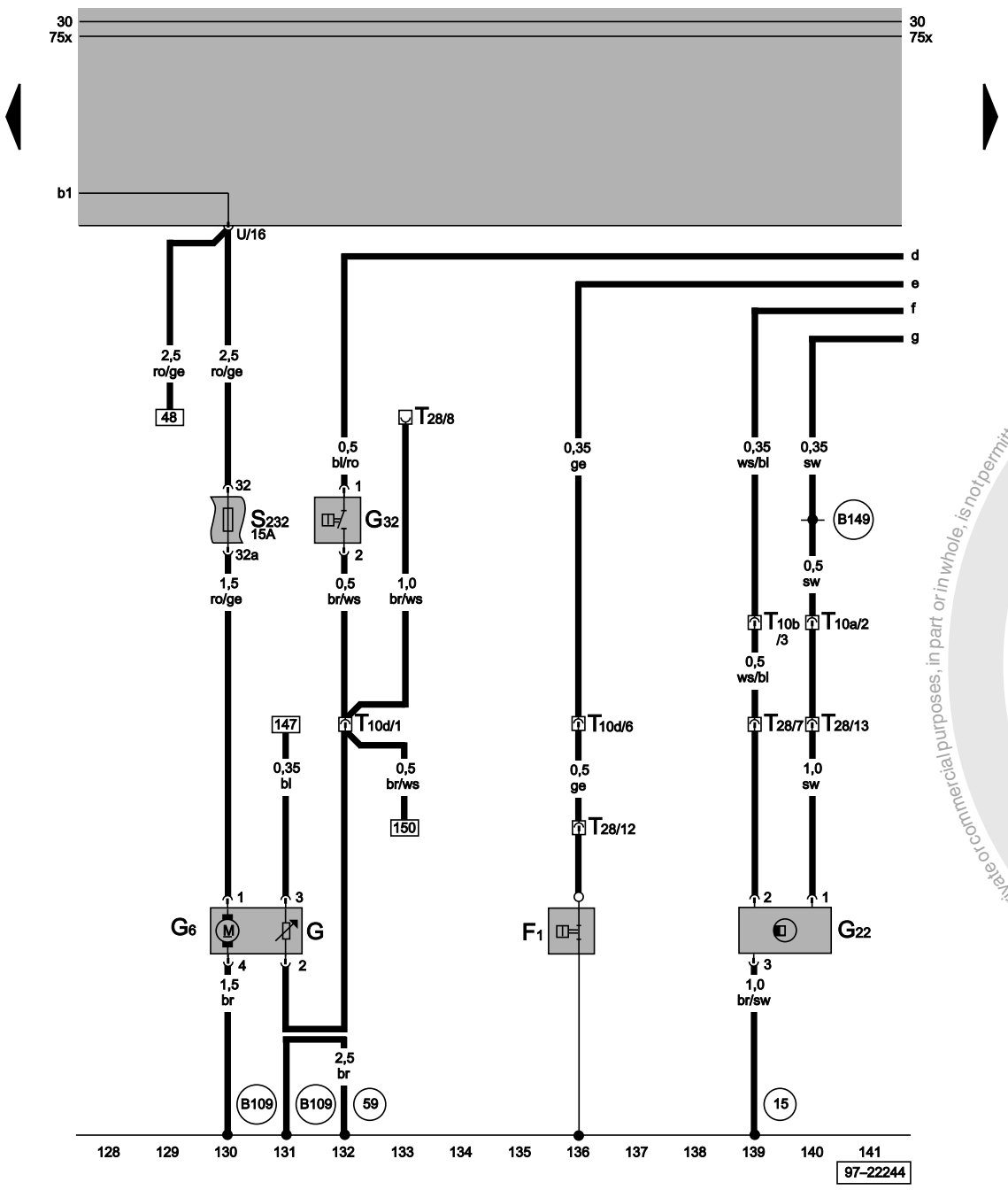

Speedometer sender, coolant shortage indicator sender, fuel supply, oil pressure switch

F1	Oil pressure switch
G	Fuel gauge sender
G6	Fuel pump (pre-supply pump)
G22	Speedometer sender (Hall sender on gearbox)
G32	Coolant shortage indicator sender
S232	Fuse in fuse holder
T10a	10-pin connector, green, near relay station
T10b	10-pin connector, black, near relay station
T10d	10-pin connector, red, near relay station
T28	28-pin connector, black, on engine
15	Earth point, on cylinder head
59	Earth point, near left-hand tail light
B109	Earth connection, in rear left interior wiring harness
B149	Positive connection -2- (15a), in interior wiring harness

ws	=	white
sw	=	black
ro	=	red
br	=	brown
gn	=	green
bl	=	blue
gr	=	grey
li	=	purple
ge	=	yellow
or	=	orange
rs	=	pink

Protected by copyright. Copying for private or commercial purposes, in part or in whole, is not permitted unless authorised by Volkswagen AG. Volkswagen AG does not guarantee or accept any liability with respect to the correctness of information in this document. Copyright by Volkswagen AG.

satelettronica

3

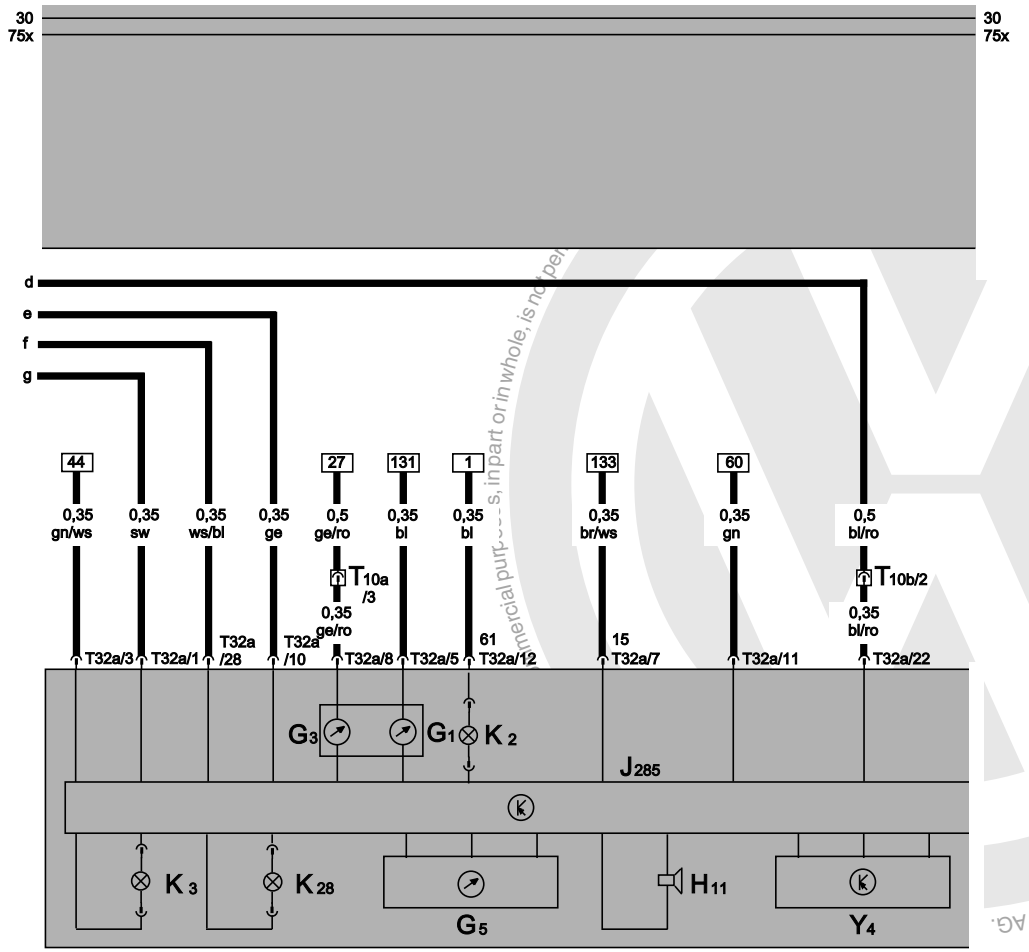

142 143 144 145 146 147 148 149 150 151 152 153 154 150

97–22245

Dash panel insert, alternator warning lamp, fuel gauge, coolant shortage and coolant temperature warning lamp, optical and acoustical oil pressure warning, odometer display

G1	Fuel gauge
G3	Coolant temperature gauge
G5	Rev. counter
H11	Oil pressure warning buzzer
J285	Control unit with display in dash panel insert
K2	Alternator warning lamp
K3	Oil pressure warning lamp
K28	Coolant temperature/coolant shortage warning lamp
T10a	10-pin connector, green, near relay station
T10b	10-pin connector, black, near relay station
T32a	32-pin connector, blue, on dash panel insert
Y4	Odometer display

ws	=	white
sw	=	black
ro	=	red
br	=	brown
gn	=	green
bl	=	blue
gr	=	grey
li	=	purple
ge	=	yellow
or	=	orange
rs	=	pink

VW does not guarantee or accept any liability with respect to the correctness of information in this document. Copyright by Volkswagen AG. Commercial purposes, in part or in whole, is not permitted.

satelettronica

1.4 ltr./74 kW 1AV, engine code AFH

From May 1997

For alternatives to relay and fuse positions as well as multi-pin connector wiring - see "Fitting locations" section.

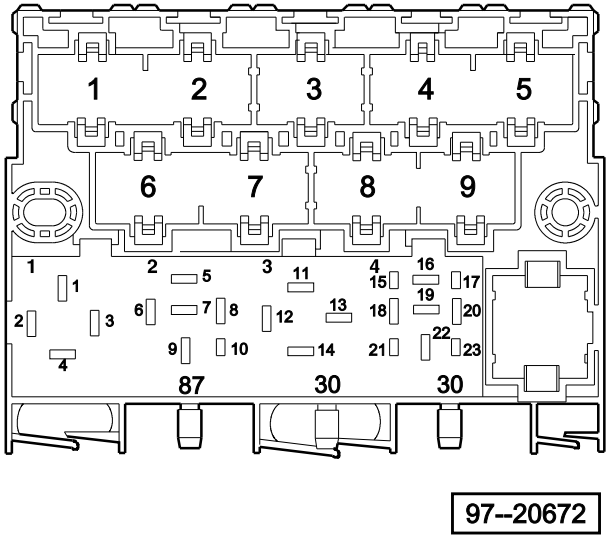

4 - Fuel pump relay (167)

Note!

- *The number in brackets behind the part designation denotes the control number on the housing.*

Fuse colours

30 A - green
25 A - white
20 A - yellow
15 A - blue
10 A - red
7.5 A - brown
5 A - beige
3 A - lilac

Protected by copyright. Copying for private or commercial purposes, in part or in whole, is not permitted unless authorised by Volkswagen AG. Volkswagen AG does not guarantee or accept any liability with respect to the correctness of information in this document. Copyright by Volkswagen AG.
satelettronica

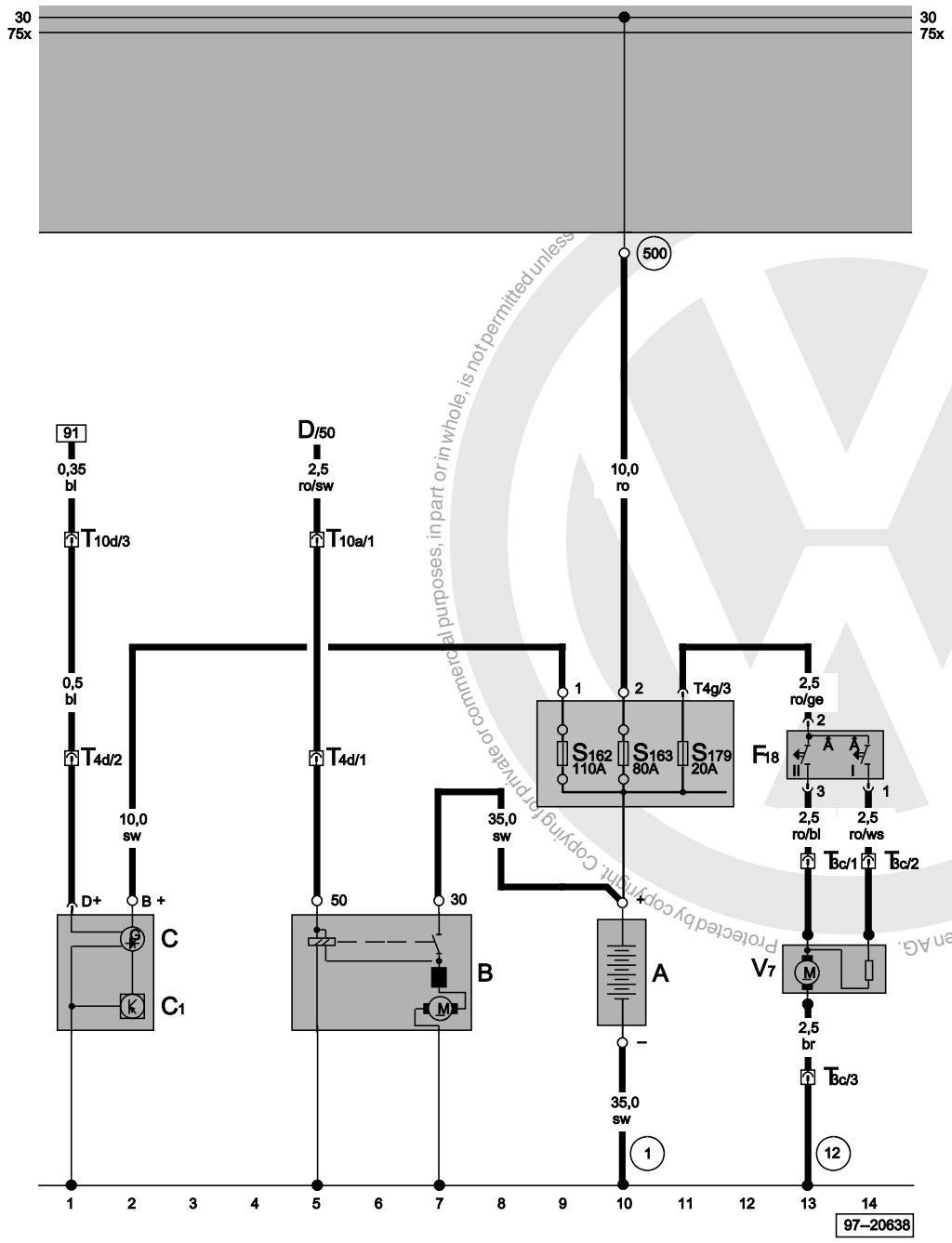

Battery, starter, alternator, radiator fan

A	Battery
B	Starter
C	Alternator
C1	Voltage regulator
D	Ignition/starter switch
F18	Radiator fan thermo-switch
S162	Fuse -1- (30), in battery fuse holder
S163	Fuse -2- (30), in battery fuse holder
S179	Fuse -7- (30), in battery fuse holder
T3c	3-pin connector, black, on radiator fan
T4d	4-pin connector, black, on gearbox
T4g	4-pin connector, black, near battery
T10a	10-pin connector, green, near relay station
T10d	10-pin connector, red, near relay station
V7	Radiator fan
(1)	Earth strap, battery - body
(12)	Earth point, in engine compartment, left
(500)	Screw connection -1- (30), on relay plate

ws	=	white
sw	=	black
ro	=	red
br	=	brown
gn	=	green
bl	=	blue
gr	=	grey
li	=	purple
ge	=	yellow
or	=	orange
rs	=	pink

Protected by copyright. Copying for private or commercial purposes, in part or in whole, is not permitted unless ... does not guarantee or accept any liability with ... to ... of information in this document. Copyright by Volkswagen AG.

satelettronica

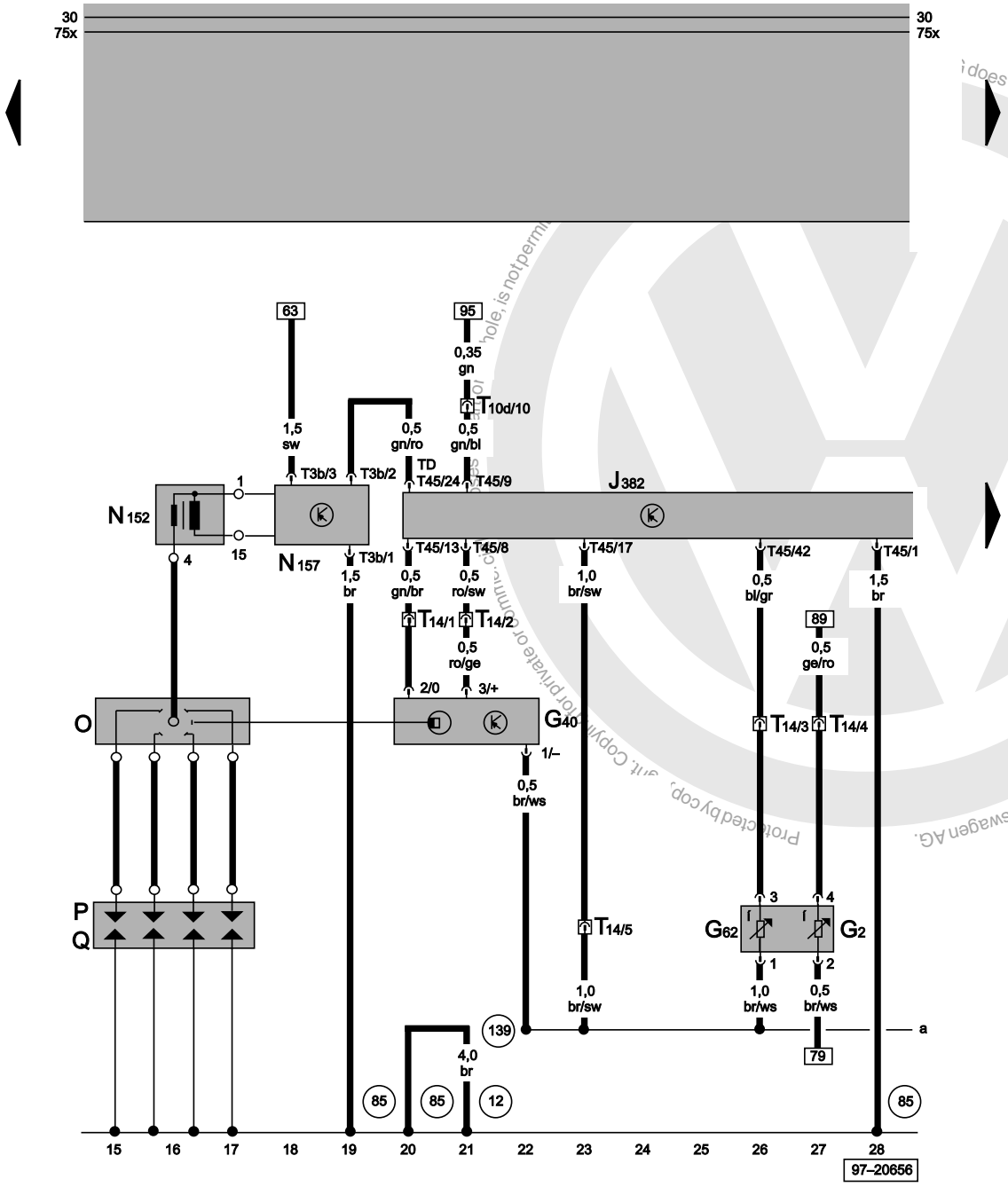

1AV control unit (injection system), ignition system, Hall sender, coolant temperature sender, power assisted steering/pressure switch

G2	Coolant temperature sender
G40	Hall sender
G62	Coolant temperature sender
J382	1AV control unit (injection system), right in plenum chamber
N152	Ignition transformer
N157	Ignition transformer output stage
O	Ignition distributor
P	Spark plug connector
Q	Flame plug
T3b	3-pin connector, black, on ignition transformer output stage
T10d	10-pin connector, red, near relay station
T14	14-pin connector, black, on engine
T45	45-pin connector, black
12	Earth point, in engine compartment, left
85	Earth connection -1-, in engine compartment wiring harness
139	Earth connection (sender earth), in Motronic wiring harness

ws	=	white
sw	=	black
ro	=	red
br	=	brown
gn	=	green
bl	=	blue
gr	=	grey
li	=	purple
ge	=	yellow
or	=	orange
rs	=	pink

satelettronica

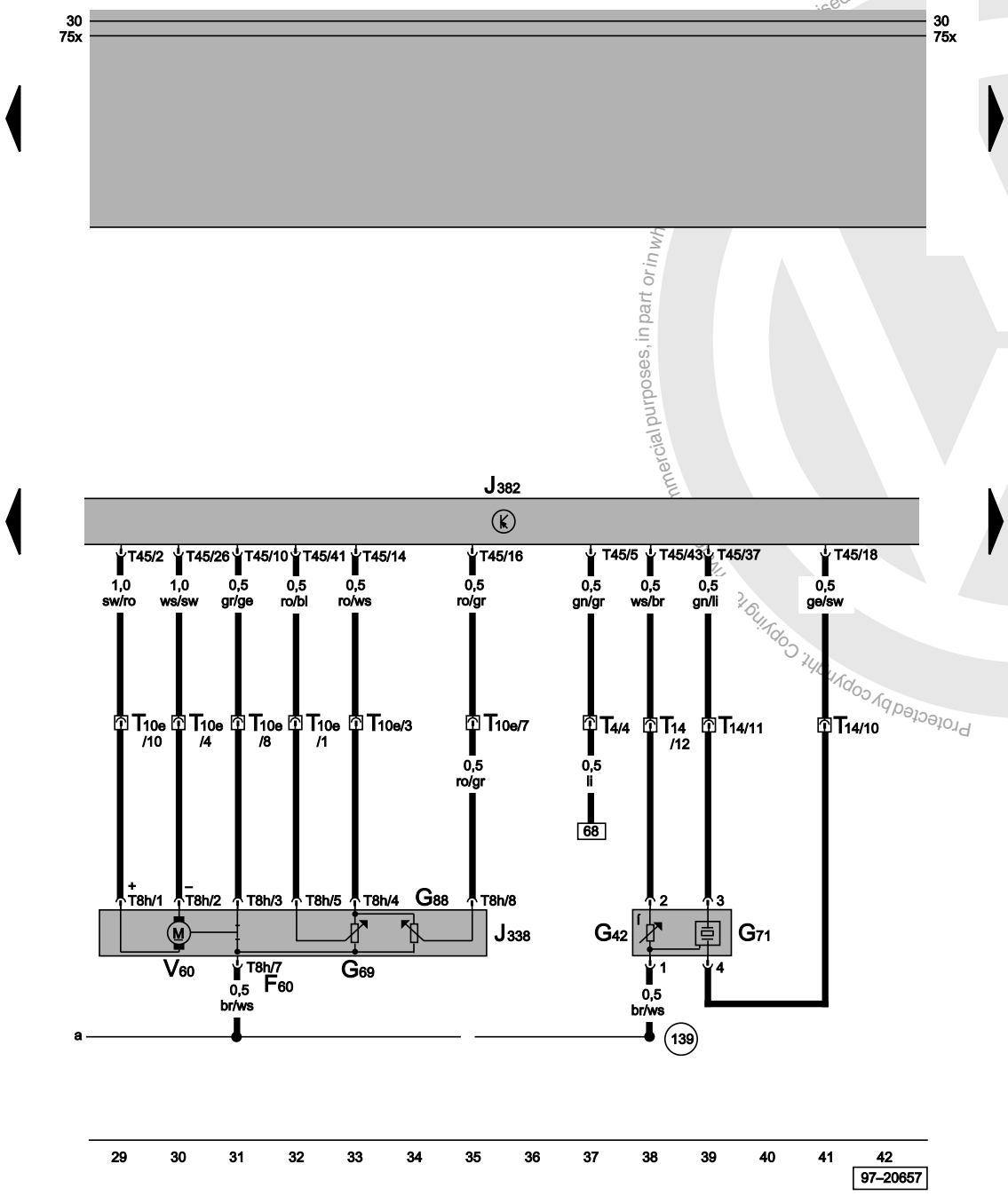

1AV control unit (injection system), throttle valve control part, intake air temperature sender, intake manifold pressure sender

F60	Idling switch
G42	Intake air temperature sender
G69	Throttle valve potentiometer
G71	Intake manifold pressure sender
G88	Throttle valve positioner potentiometer
J338	Throttle valve control unit, near intake manifold
J382	1AV control unit (injection system), right in plenum chamber
T4	4-pin connector, black, on engine
T8h	8-pin connector, black, on throttle valve control unit
T10e	10-pin connector, black, on engine
T14	14-pin connector, black, on engine
T45	45-pin connector, black
V60	Throttle valve positioner
139	Earth connection (sender earth), in Motronic wiring harness

ws	=	white
sw	=	black
ro	=	red
br	=	brown
gn	=	green
bl	=	blue
gr	=	grey
li	=	purple
ge	=	yellow
or	=	orange
rs	=	pink

Protected by copyright. Copying for commercial purposes, in part or in whole, is not permitted without the express consent of Volkswagen AG. Copyright by Volkswagen AG.
Reproduced by Volkswagen AG does not guarantee or accept any liability with respect to the correctness of information in this document.
satelettronica

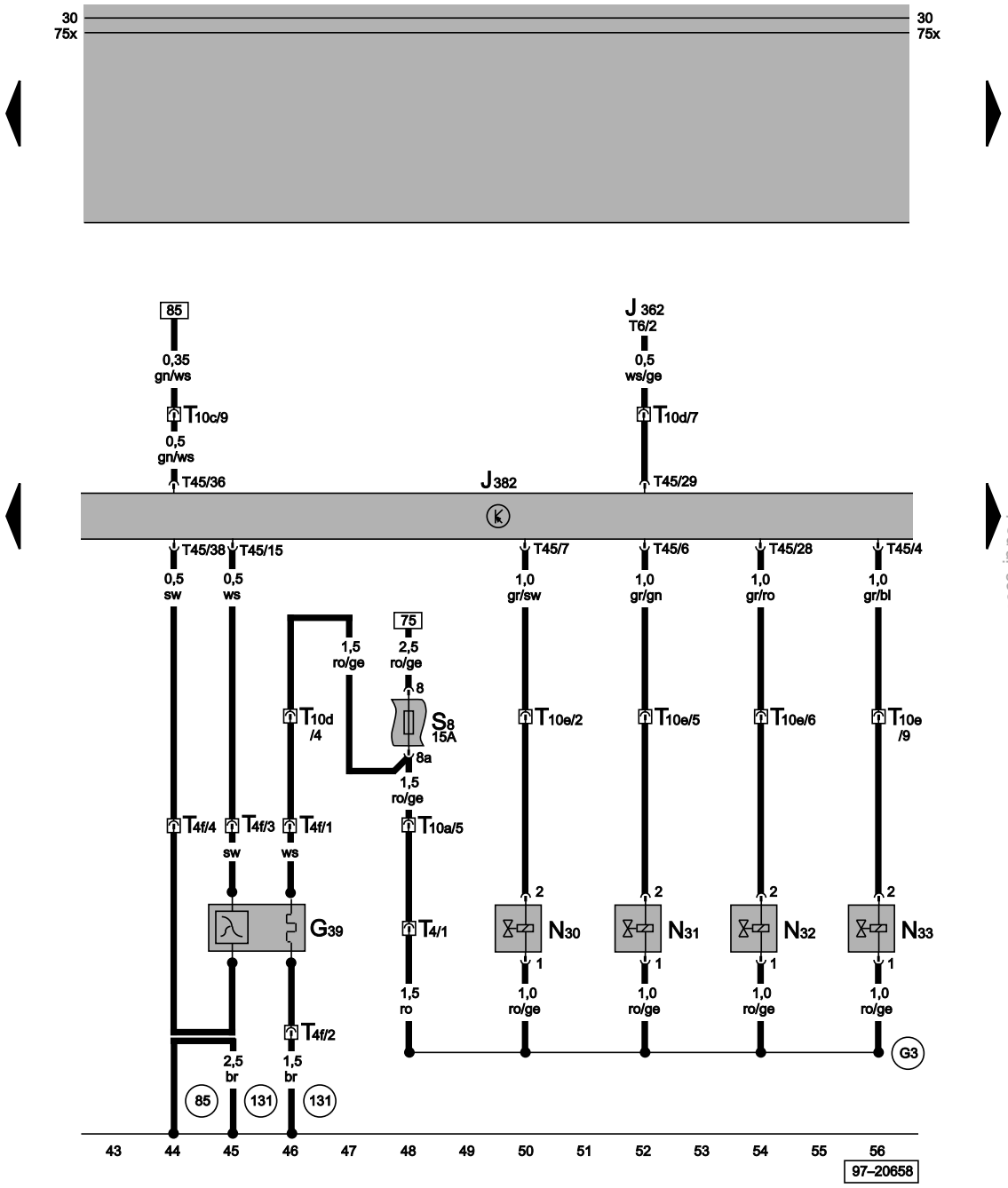

1AV control unit (injection system), injectors, Lambda probe

G39	Lambda probe
J362	Immobilizer control unit, next to steering column
J382	1AV control unit (injection system), right in plenum chamber
N30	Injector, cylinder 1
N31	Injector, cylinder 2
N32	Injector, cylinder 3
N33	Injector, cylinder 4
S8	Fuse in relay plate fuse box
T4	4-pin connector, black, on engine
T4f	4-pin connector, black, on gearbox
T6	6-pin connector, black, on immobilizer control unit
T10a	10-pin connector, green, near relay station
T10c	10-pin connector, blue, near relay station
T10d	10-pin connector, red, near relay station
T10e	10-pin connector, black, on engine
T45	45-pin connector, black
85	Earth connection -1-, in engine compartment wiring harness
131	Earth connection -3-, in engine compartment wiring harness
G3	Positive (+) connection in cable sleeve - injectors

ws	=	white
sw	=	black
ro	=	red
br	=	brown
gn	=	green
bl	=	blue
gr	=	grey
li	=	purple
ge	=	yellow
or	=	orange
rs	=	pink

Protected by copyright. Copying for private or commercial purposes, in part or in whole, is not permitted unless authorised by Volkswagen AG. Volkswagen AG does not guarantee or accept any liability with respect to the correctness of information in this document. Copyright by Volkswagen AG.
satelettronica

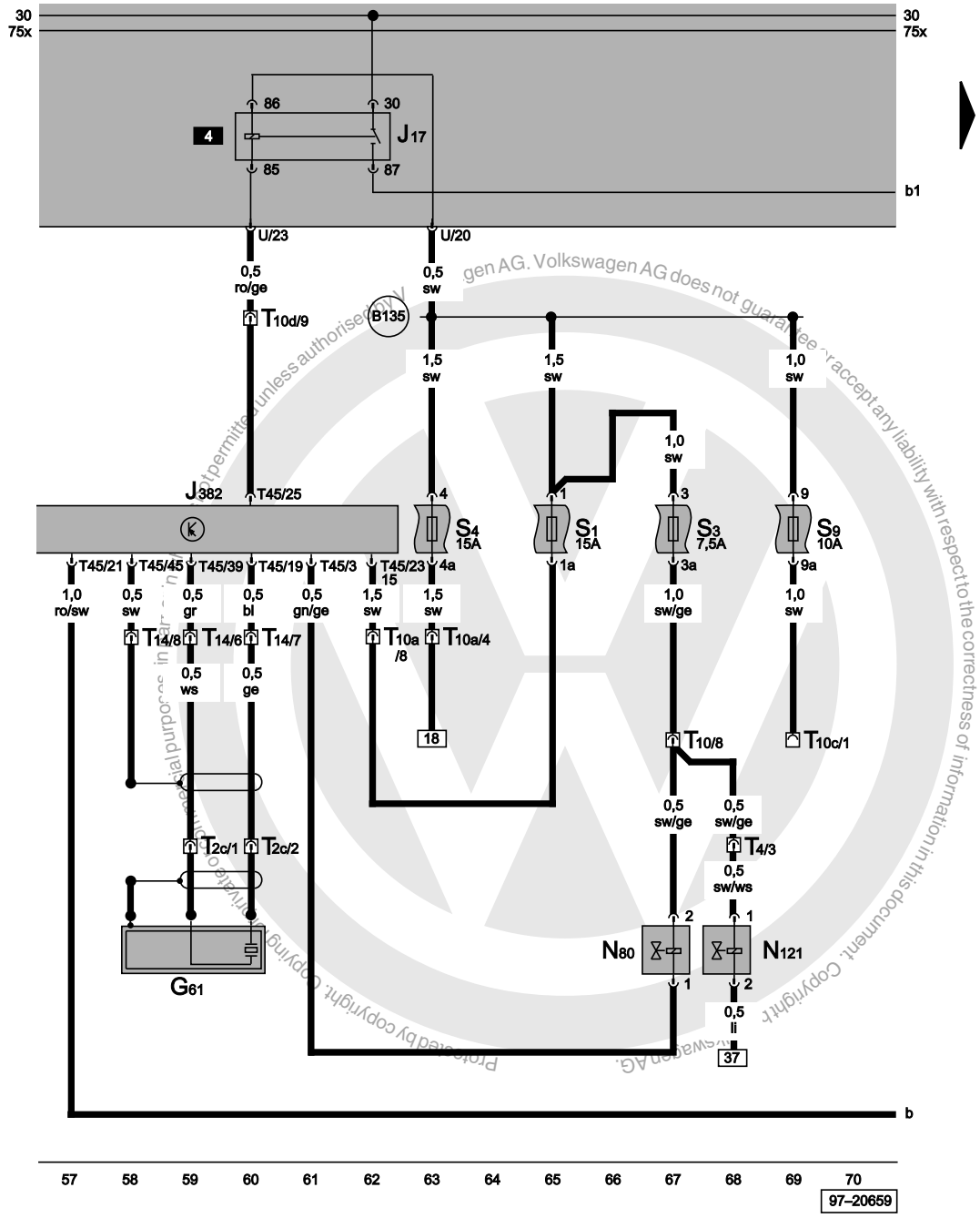

1AV control unit (injection system), knock sensor, exhaust gas recirculation pulsed valve, activated charcoal filter system

G61	Knock sensor I
J17	Fuel pump relay
J382	1AV control unit (injection system), right in plenum chamber
N80	Activated charcoal filter system solenoid valve I
N121	Exhaust gas recirculation frequency valve
S1	Fuse in relay plate fuse box
S3	Fuse in relay plate fuse box
S4	Fuse in relay plate fuse box
S9	Fuse in relay plate fuse box
T2c	2-pin connector, black, on engine
T4	4-pin connector, black, on engine
T10	10-pin connector, white, near relay station
T10a	10-pin connector, green, near relay station
T10c	10-pin connector, blue, near relay station
T10d	10-pin connector, red, near relay station
T14	14-pin connector, black, on engine
T45	45-pin connector, black
B135	Connection -1- (15a), in interior wiring harness

ws	=	white
sw	=	black
ro	=	red
br	=	brown
gn	=	green
bl	=	blue
gr	=	grey
li	=	purple
ge	=	yellow
or	=	orange
rs	=	pink

satelettronica

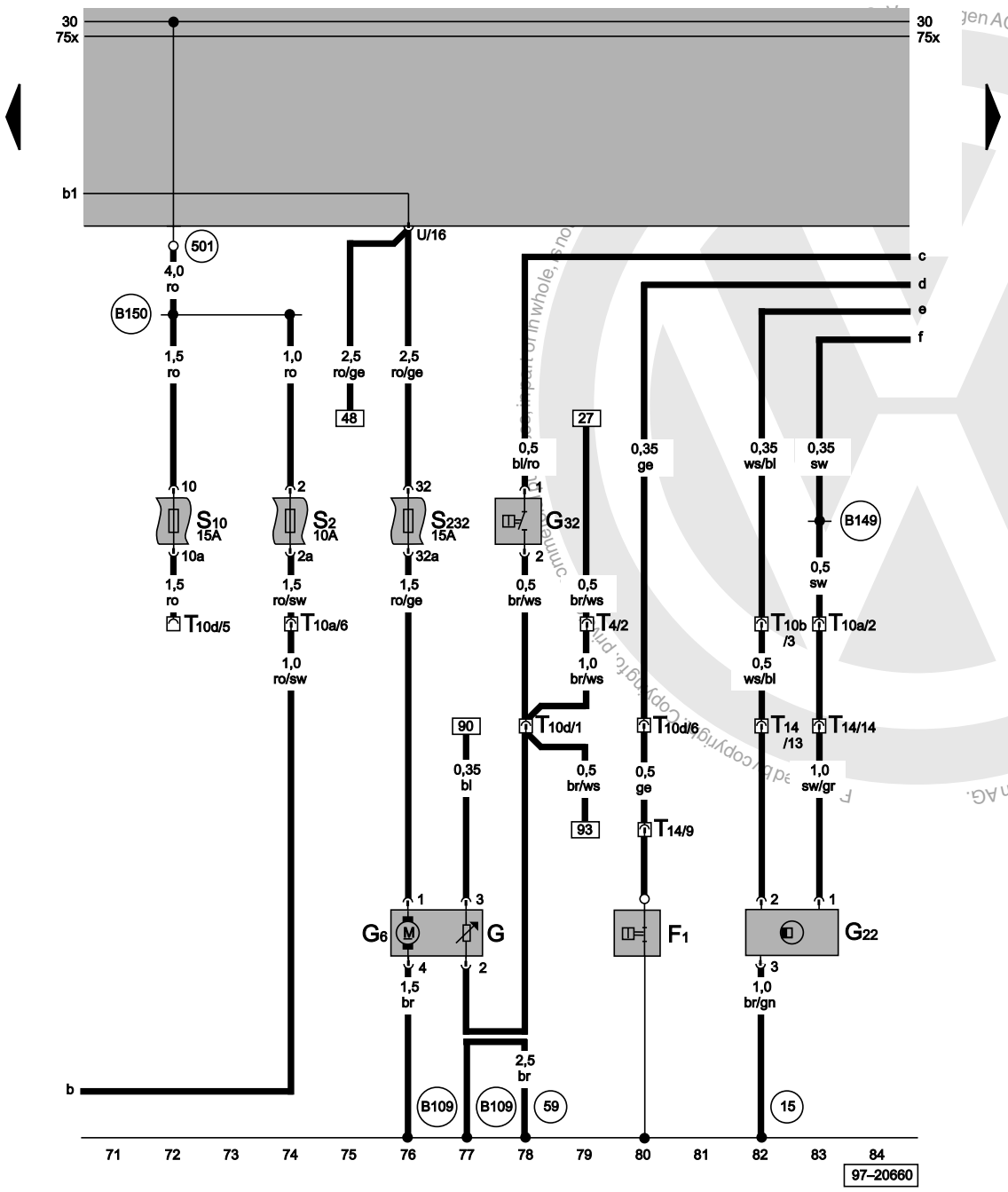

Speedometer sender, coolant shortage indicator sender, fuel supply

F1	Oil pressure switch
G	Fuel gauge sender
G6	Fuel pump (pre-supply pump)
G22	Speedometer sender (Hall sender on gearbox)
G32	Coolant shortage indicator sender
S2	Fuse in relay plate fuse box
S10	Fuse in relay plate fuse box
S232	Fuse in fuse holder
T4	4-pin connector, black, on engine
T10a	10-pin connector, green, near relay station
T10b	10-pin connector, black, near relay station
T10d	10-pin connector, red, near relay station
T14	14-pin connector, black, on engine
15	Earth point, on cylinder head
59	Earth point, near left-hand tail light
501	Screw connection -2- (30), on relay plate
B109	Earth connection, in rear left interior wiring harness
B149	Positive connection -2- (15a), in interior wiring harness
B150	Positive connection -2- (30a), in interior wiring harness

ws	=	white
sw	=	black
ro	=	red
br	=	brown
gn	=	green
bl	=	blue
gr	=	grey
li	=	purple
ge	=	yellow
or	=	orange
rs	=	pink

satelettronica

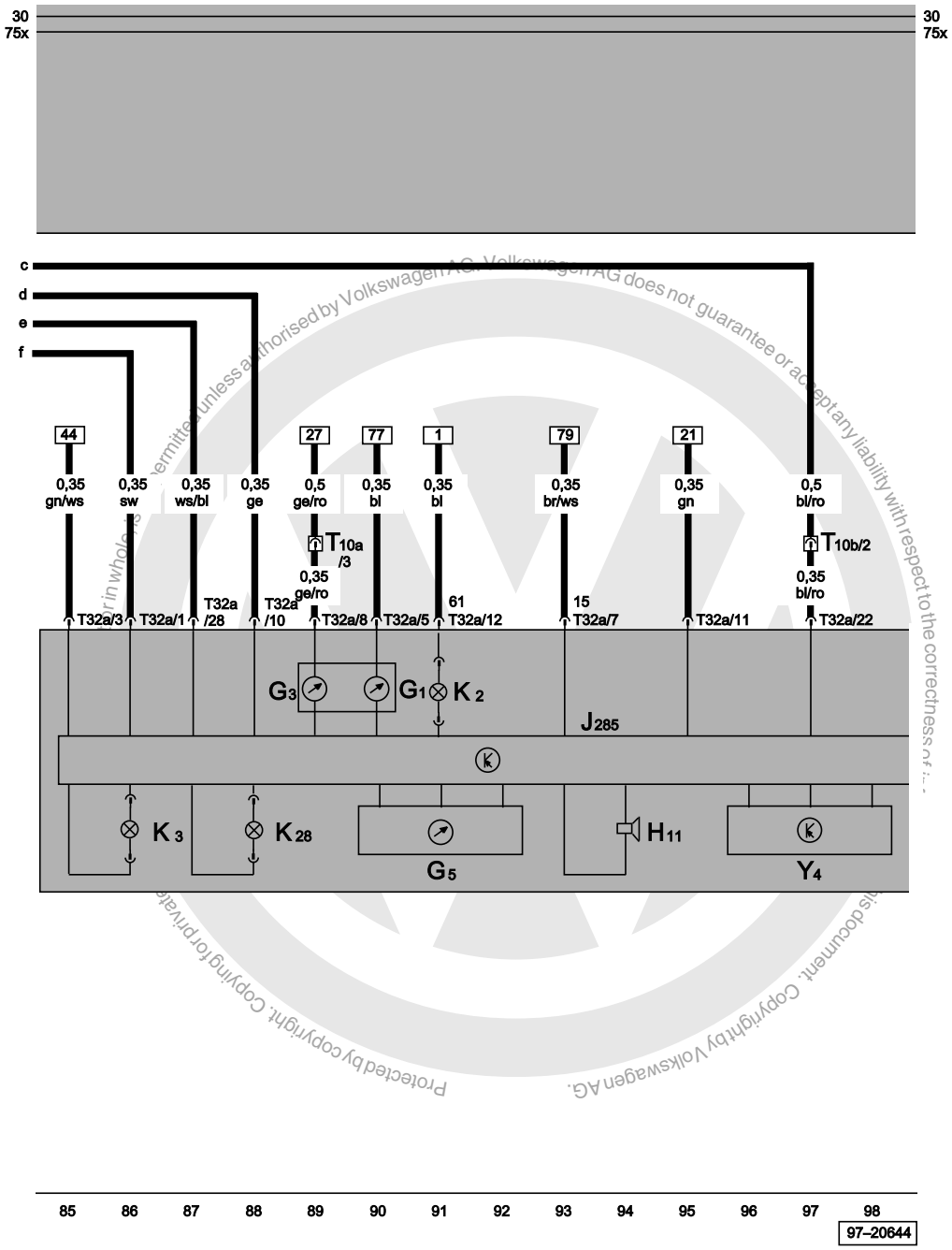

Dash panel insert, alternator warning lamp, fuel gauge, coolant shortage and coolant temperature warning lamp, optical and acoustical oil pressure warning, odometer

G1	Fuel gauge
G3	Coolant temperature gauge
G5	Rev. counter
H11	Oil pressure warning buzzer
J285	Control unit with display in dash panel insert
K2	Alternator warning lamp
K3	Oil pressure warning lamp
K28	Coolant temperature/coolant shortage warning lamp
T10a	10-pin connector, green, near relay station
T10b	10-pin connector, black, near relay station
T32a	32-pin connector, blue, on dash panel insert
Y4	Odometer display

ws	=	white
sw	=	black
ro	=	red
br	=	brown
gn	=	green
bl	=	blue
gr	=	grey
li	=	purple
ge	=	yellow
or	=	orange
rs	=	pink

Protected by copyright. Copying for private or in whole or in part is not permitted unless authorised by Volkswagen AG. Volkswagen AG does not guarantee or accept any liability with respect to the correctness of this document. Copyright by Volkswagen AG.

satelettronica

Anti-locking brake system (ABS)

⇒ 1.9 litre/47 kW Naturally aspirated diesel, engine codes AGD
⇒ 1.7 litre/42 kW Naturally aspirated diesel, engine codes AHG
From May 1997

Anti-locking brake system (ABS)

⇒ 1.7 litre/44 kW Naturally aspirated diesel, engine codes AKU
From September 1997

Anti-locking brake system (ABS)

⇒ 1.9 litre/47 kW Naturally aspirated diesel, engine codes ASX
From May 2000

For alternatives to relay and fuse positions as well as multi-pin connector wiring - see "Fitting locations" section.

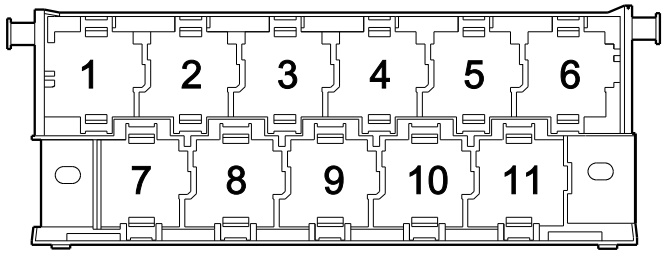

97-22850

Fuse colours

30 A - green
25 A - white
20 A - yellow
15 A - blue
10 A - red
7.5 A - brown
5 A - beige
3 A - lilac

Protected by copyright. Copying for private or commercial purposes, in part or in whole, is not permitted unless authorised by Volkswagen AG. Volkswagen AG does not guarantee or accept any liability with respect to the correctness of information in this document. Copyright by Volkswagen AG.
satelettronica

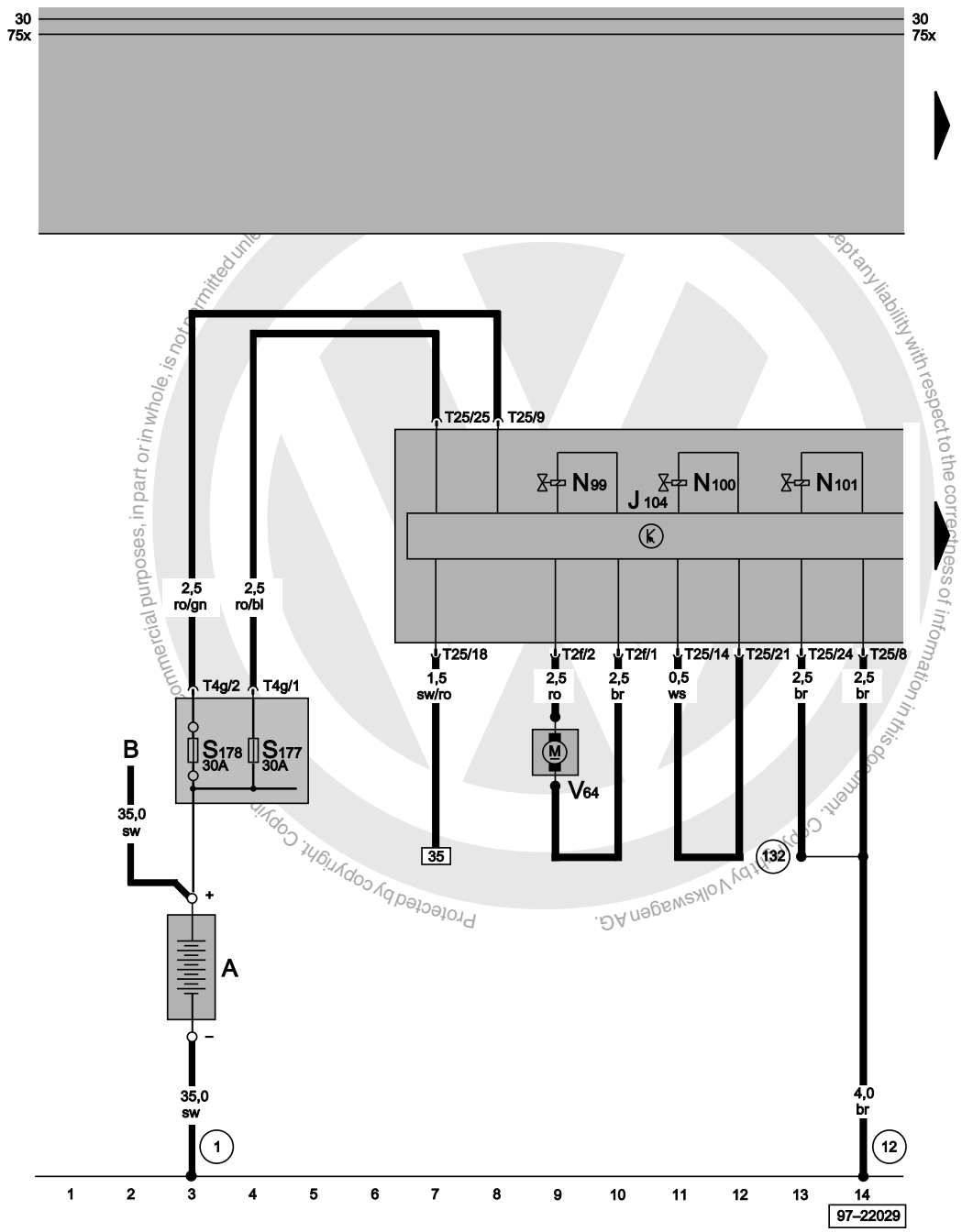

ABS control unit, fuses in fuse box / battery

A	Battery
B	Starter
J104	ABS control unit, in engine compartment, left
N99	ABS inlet valve, front right
N100	ABS outlet valve, front right
N101	ABS inlet valve, front left
S177	Fuse -5- (30), in fuse box/battery
S178	Fuse -6- (30), in fuse box/battery
T2f	2-pin connector, black
T4g	4-pin connector, black, near battery
T25	25-pin connector, black
V64	ABS hydraulic pump, on ABS control unit
1	Earth strap, battery - body
12	Earth point, in engine compartment, left
132	Earth connection -3-, in engine compartment wiring harness

ws	=	white
sw	=	black
ro	=	red
br	=	brown
gn	=	green
bl	=	blue
gr	=	grey
li	=	purple
ge	=	yellow
or	=	orange
rs	=	pink

Protected by copyright. Copyright by Volkswagen AG.
Commercial purposes, in part or in whole, is not permitted unless authorised by Volkswagen AG. We accept any liability with respect to the correctness of information in this document.
satelettronica

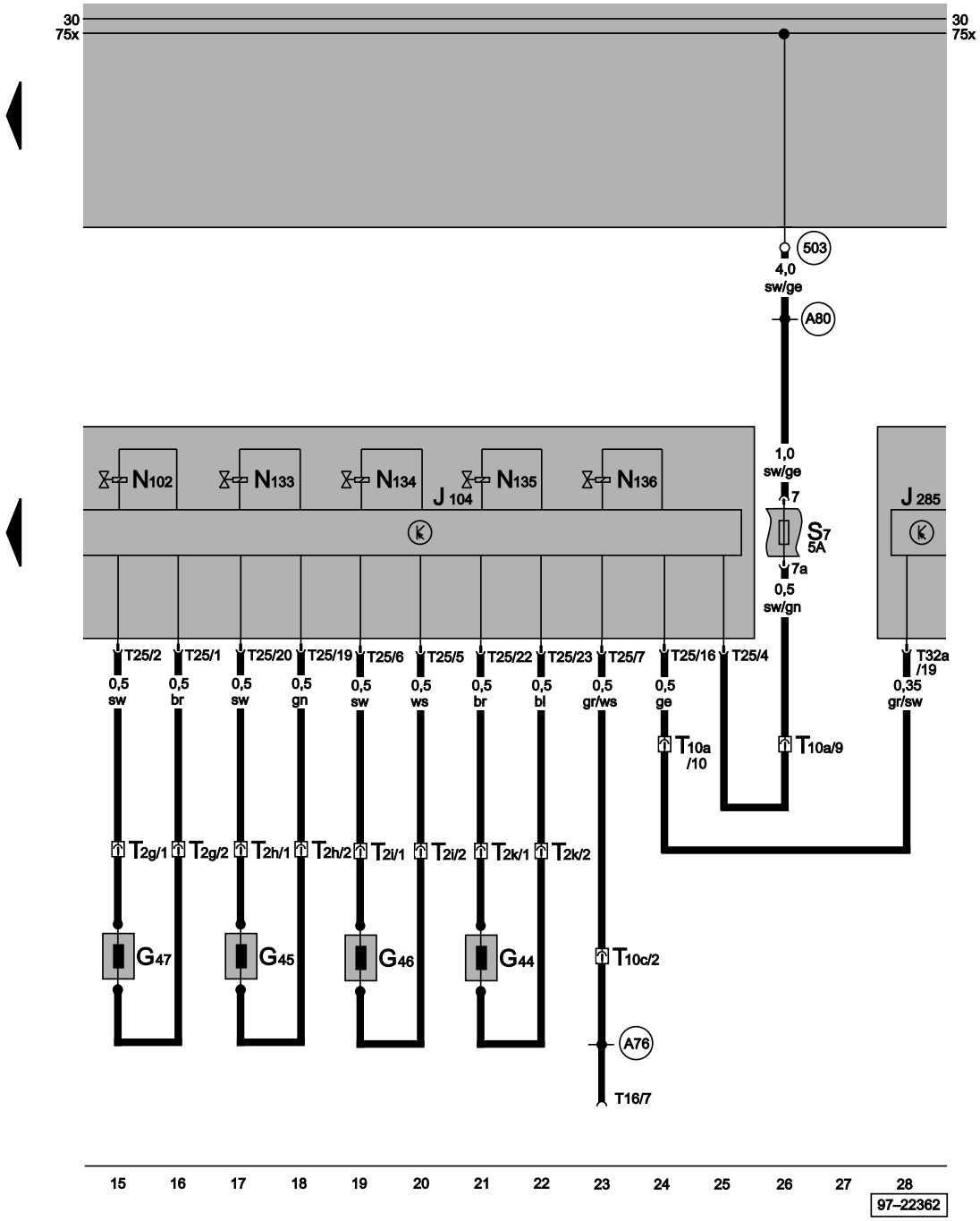

ABS control unit, inlet valves, dash panel insert, self-diagnosis connection

G44	Rear right speed sensor
G45	Front right speed sensor
G46	Rear left speed sensor
G47	Front left speed sensor
J104	ABS control unit, left in engine compartment
J285	Control unit with display in dash panel insert
N102	ABS outlet valve, front left
N133	ABS inlet valve, rear right
N134	ABS inlet valve, rear left
N135	ABS outlet valve, rear right
N136	ABS outlet valve, rear left
S7	Fuse in relay plate fuse box
T2g	2-pin connector, black, behind left suspension strut
T2h	2-pin connector, black, behind right suspension strut
T2i	2-pin connector, black, under rear seat
T2k	2-pin connector, black, under rear seat
T10a	10-pin connector, near relay station
T10c	10-pin connector, near relay station
T16	16-pin connector, self-diagnosis connection, right in glove compartment
T25	25-pin connector, black
T32a	32-pin connector, blue, on dash panel insert
503	Screw connection (75x), on relay plate
A76	Connection (diagnosis wire K), in dash panel wiring harness
A80	Connection -1- (X), in dash panel wiring harness

ws	=	white
sw	=	black
ro	=	red
br	=	brown
gn	=	green
bl	=	blue
gr	=	grey
li	=	purple
ge	=	yellow
or	=	orange
rs	=	pink

Copyright by Volkswagen AG. Volkswagen AG does not guarantee or accept any liability with respect to the correctness of information in this document. Copyright by Volkswagen AG. Protected by copyright. Copying for private or commercial purposes, in part or in whole, is not permitted unless authorised by Volkswagen AG.
satelettronica

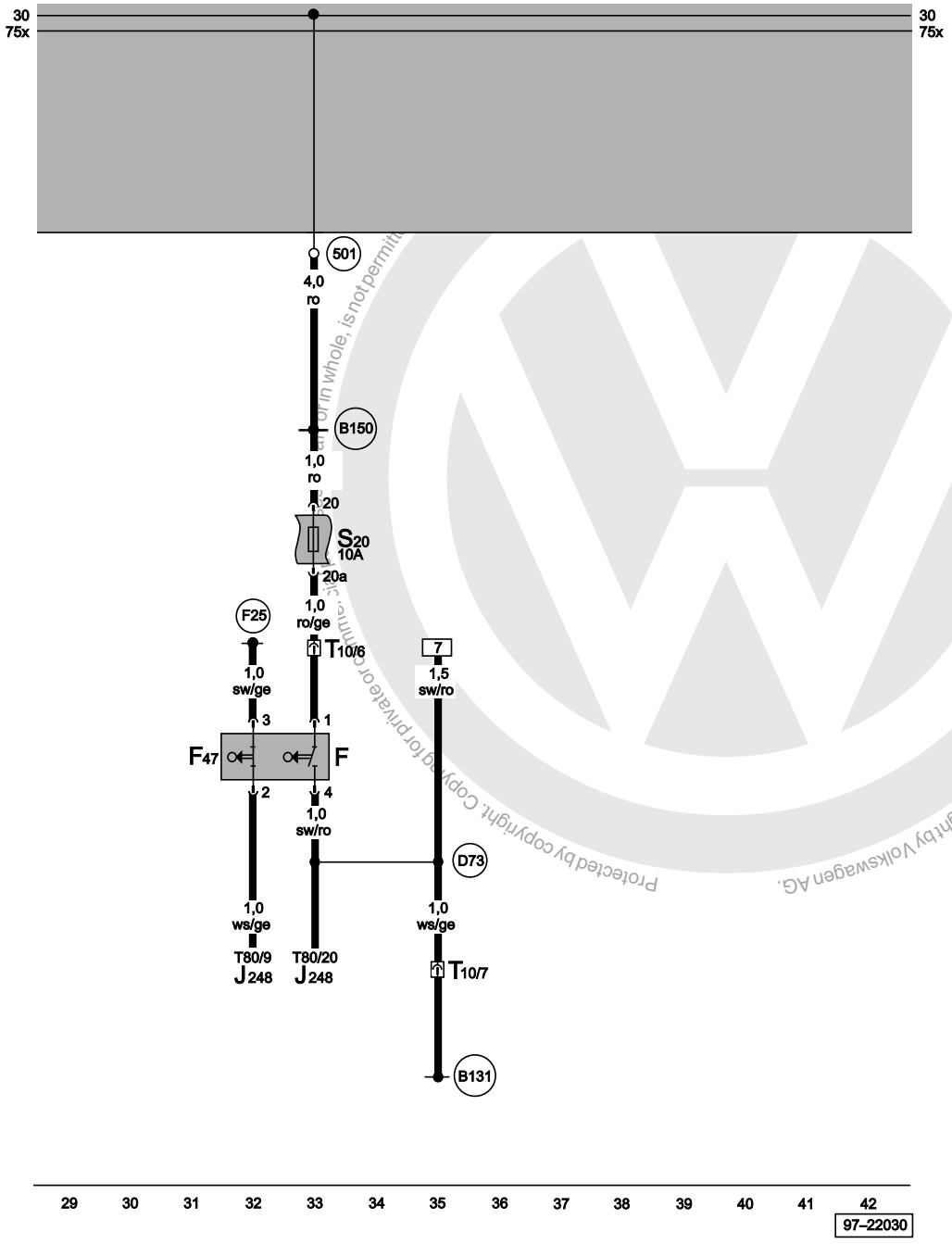

Brake light switch

F	Brake light switch
F47	Cruise cont. sys. brake pedal switch (diesel direct inj. system)
J248	Diesel direct injection system control unit, right in plenum chamber
S20	Fuse in relay plate fuse box
T10	10-pin connector, white, near relay station
T80	80-pin connector, black
501	Screw connection -2- (30), on relay plate
B131	Connection (54), in interior wiring harness
B150	Positive connection -2- (30a), in interior wiring harness
D73	Positive connection (54), in engine compartment wiring harness
F25	Connection -1-, in diesel direct injection system wiring harness

ws	=	white
sw	=	black
ro	=	red
br	=	brown
gn	=	green
bl	=	blue
gr	=	grey
li	=	purple
ge	=	yellow
or	=	orange
rs	=	pink

Protected by copyright. Copying for private or commercial purposes, in whole or in part, is not permitted unless authorised. Volkswagen AG does not guarantee or accept any liability with respect to the correctness of information in this document. Copyright by Volkswagen AG.

satelettronica

Anti-locking brake system (ABS)

⇒ **1.9 litre/47 kW Naturally aspirated diesel, engine codes AEF**

From May 1997

For alternatives to relay and fuse positions as well as multi-pin connector wiring - see "Fitting locations" section.

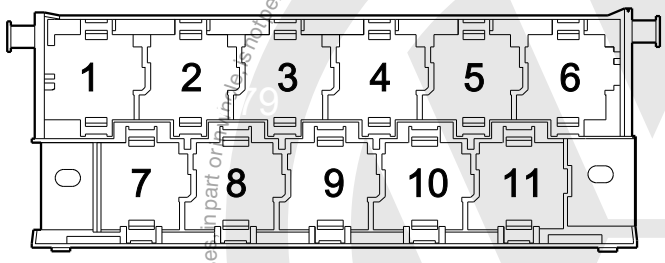

97-22850

Fuse colours

30 A - green
25 A - white
20 A - yellow
15 A - blue
10 A - red
7.5 A - brown
5 A - beige
3 A - lilac

Protected by copyright. Copying for private or commercial purposes, in part or in whole, is not permitted unless authorised by Volkswagen AG. Volkswagen AG does not guarantee or accept any liability with respect to the correctness of information in this document. Copyright by Volkswagen AG.

satelettronica

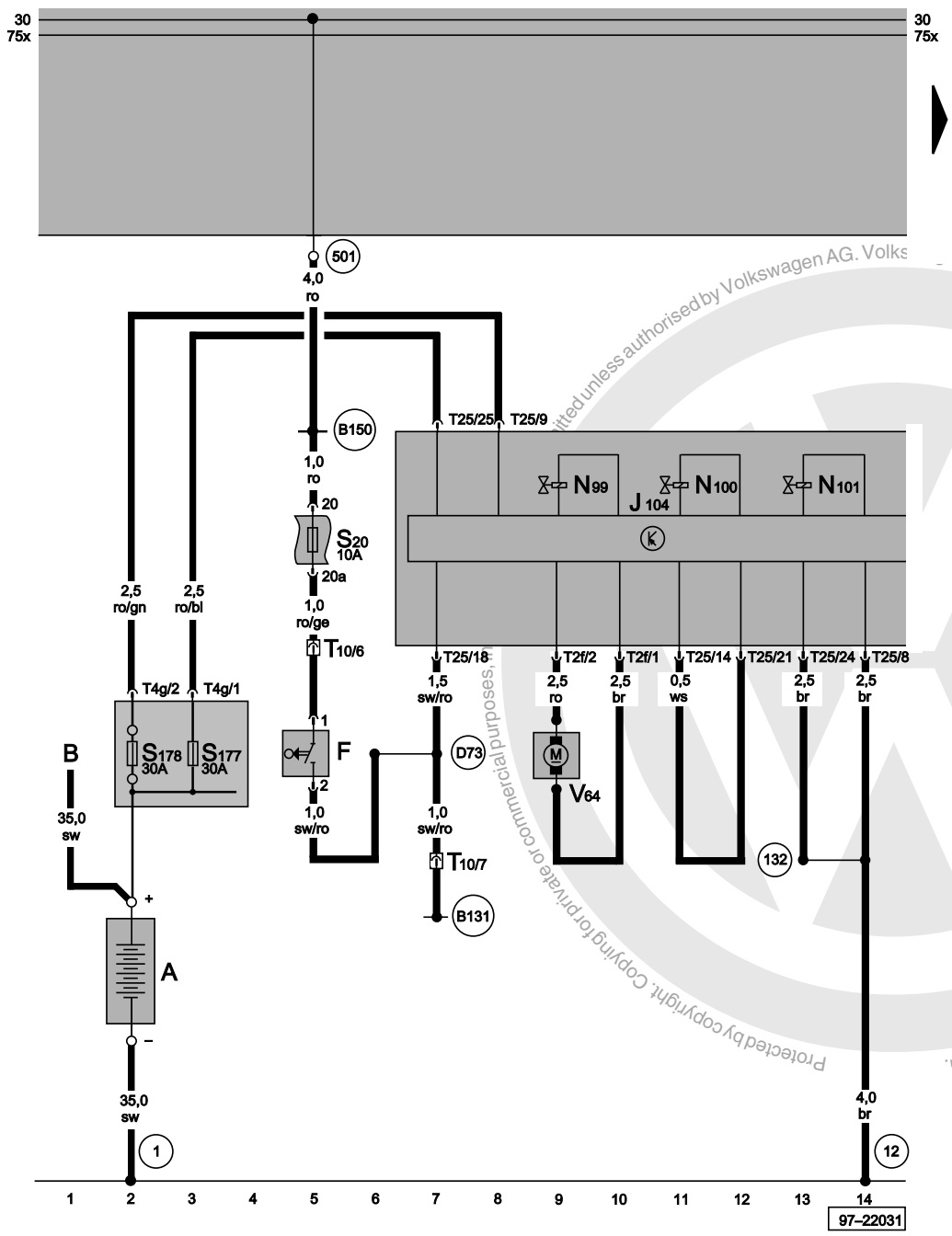

ABS control unit, brake light switch, fuses in fuse box / battery

A	Battery
B	Starter
F	Brake light switch
J104	ABS control unit, in engine compartment, left
N99	ABS inlet valve, front right
N100	ABS outlet valve, front right
N101	ABS inlet valve, front left
S20	Fuse in fuse box
S177	Fuse -5- (30), in fuse box/battery
S178	Fuse -6- (30), in fuse box/battery
T2f	2-pin connector, black
T4g	4-pin connector, black, near battery
T10	10-pin connector, white, near relay station
T25	25-pin connector, black
V64	ABS hydraulic pump, on ABS control unit
1	Earth strap, battery - body
12	Earth point, in engine compartment, left
132	Earth connection -3-, in engine compartment wiring harness
501	Screw connection -2- (30), on relay plate
B131	Connection (54), in interior wiring harness
B150	Positive (+) connection -2- (30a), in interior wiring harness
D73	Positive (+) connection (54), in engine compartment wiring harness

ws	=	white
sw	=	black
ro	=	red
br	=	brown
gn	=	green
bl	=	blue
gr	=	grey
li	=	purple
ge	=	yellow
or	=	orange
rs	=	pink

Protected by copyright. Copying for private or commercial purposes, in part or in whole, is not permitted unless authorised by Volkswagen AG. Volkswagen AG does not guarantee or accept any liability with respect to the correctness of information in this document. Copyright by Volkswagen AG.
satelettronica

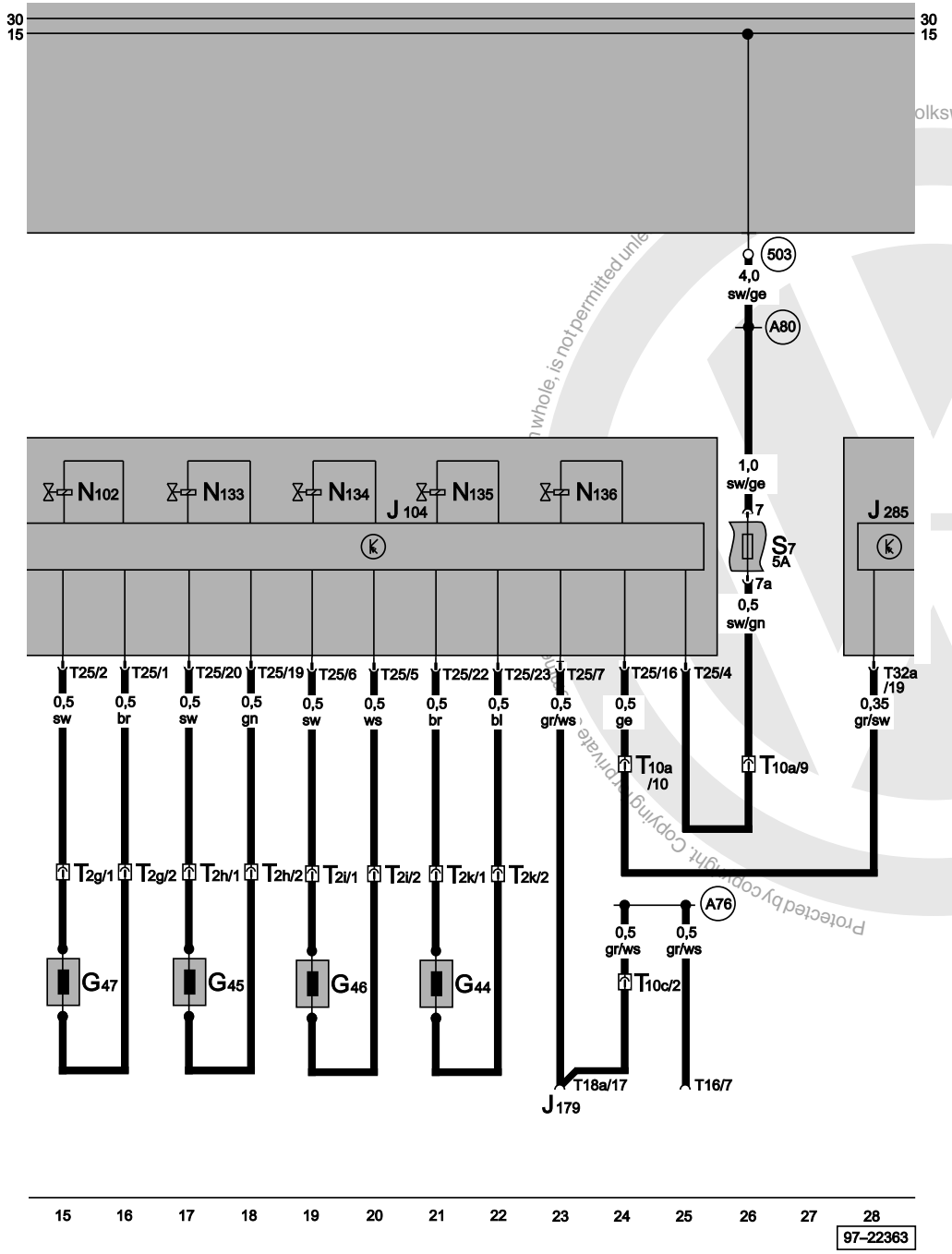

ABS control unit, inlet valves, dash panel insert, self-diagnosis connection

G44	Rear right speed sensor
G45	Front right speed sensor
G46	Rear left speed sensor
G47	Front left speed sensor
J104	ABS control unit, left in engine compartment
J179	Automatic glow period control unit, above the relay plate
J285	Control unit with display in dash panel insert
N102	ABS outlet valve, front left
N133	ABS inlet valve, rear right
N134	ABS inlet valve, rear left
N135	ABS outlet valve, rear right
N136	ABS outlet valve, rear left
S7	Fuse in relay plate fuse box
T2g	2-pin connector, black, behind left suspension strut
T2h	2-pin connector, black, behind right suspension strut
T2i	2-pin connector, under rear seat
T2k	2-pin connector, under rear seat
T10a	10-pin connector, near relay station
T10c	10-pin connector, near relay station
T16	16-pin connector, self-diagnosis connection, right in glove compartment
T18a	18-pin connector, black
T25	25-pin connector, black
T32a	32-pin connector, blue, on dash panel insert
A76	Connection (diagnosis wire K), in dash panel wiring harness
A80	Connection -1- (X), in dash panel wiring harness
503	Screw connection (75x), on relay plate

ws	=	white
sw	=	black
ro	=	red
br	=	brown
gn	=	green
bl	=	blue
gr	=	grey
li	=	purple
ge	=	yellow
or	=	orange
rs	=	pink

Volkswagen AG does not guarantee or accept any liability with respect to the correctness and completeness of this document. Copyright by Volkswagen AG. Protected by copyright. Copying, in whole, is not permitted unless authorized by Volkswagen AG. Copyright by Volkswagen AG.
satelettronica

Anti-lock brake system (ABS)

⇒ 1.0 l/37 kW - Motronic, engine codes AER, ALL, AHS
⇒ 1.4 l/40 kW - Motronic, engine code ANX
⇒ 1.4 l/44 kW - Motronic, engine codes AEX, AKV, APQ
⇒ 1.4 l/74 kW - 1AV, engine code AFH
⇒ 1.6 l/55kW - 1AV, engine code AEE
From May 1997

Anti-lock brake system (ABS)

⇒ 1.6 l/88 kW - 4CV, engine code AJV
From August 1998

Protected by copyright. Copying for private or commercial purposes, in part or in whole, is not permitted unless authorised by Volkswagen AG. Volkswagen AG does not guarantee or accept any liability with respect to the correctness of information in this document. Copyright by Volkswagen AG.

Notes:
For information concerning
- Relay and fuse assignment
- Multi-pin connectors
- Control units and relays
- Earth connections

⇒ Overview of Fitting Locations!
For information concerning
- Fault Finding Programs

⇒ Guided Fault Finding

satelettronica

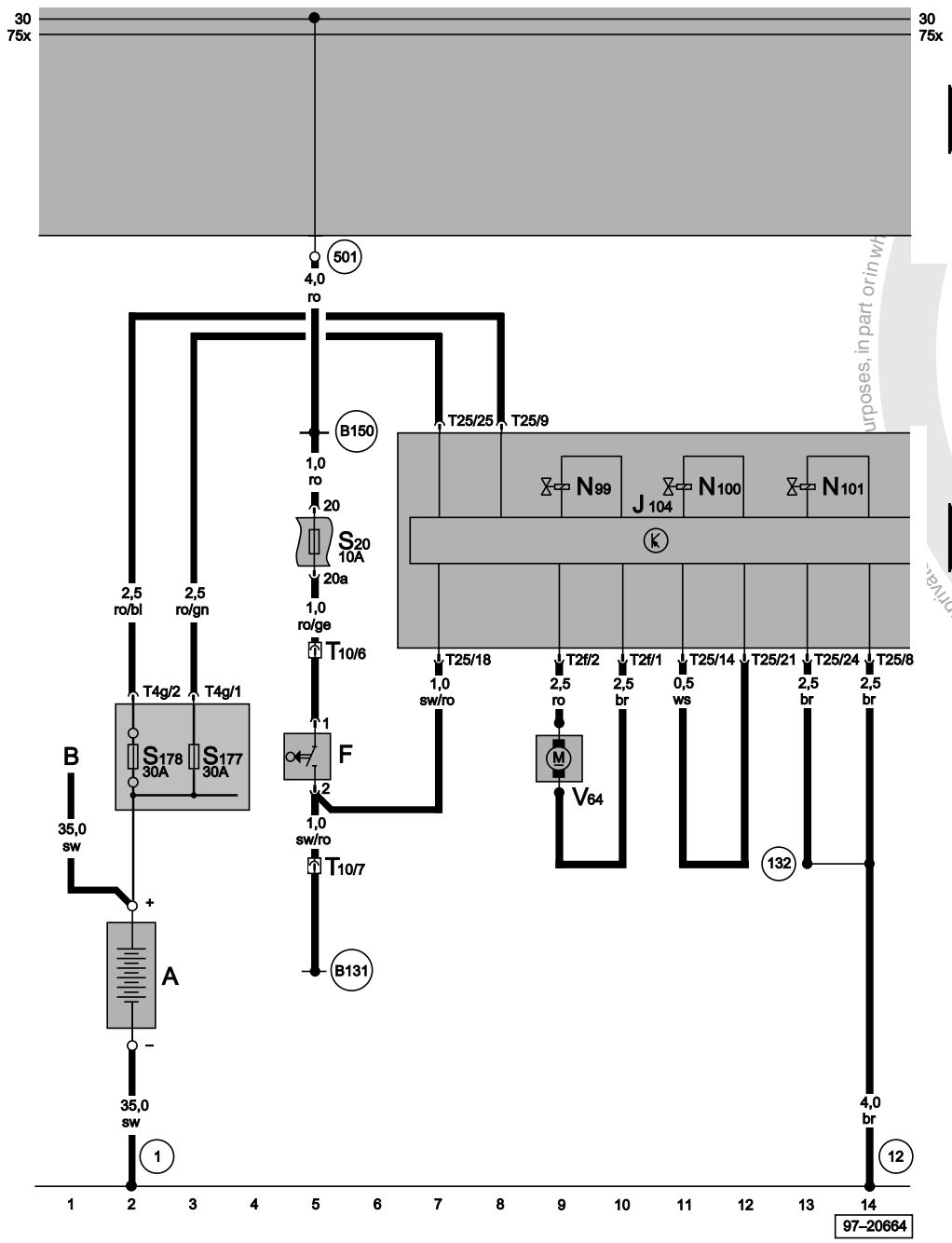

ABS control unit, brake light switch, fuses on battery fuse holder

A	Battery
B	Starter
F	Brake light switch
J104	ABS control unit, on left in engine compartment
N99	Front right ABS inlet valve
N100	Front right ABS outlet valve
N101	Front left ABS inlet valve
S20	Fuses on fuse holder
S177	Fuse 5 (30), on battery fuse holder
S178	Fuse 6 (30), on battery fuse holder
T2f	2-pin connector, black, on ABS control unit
T4g	4-pin connector, black, near battery
T10	10-pin connector, white, near relay station
T25	25-pin connector, black, on ABS control unit
V64	ABS hydraulic pump (01276), on ABS control unit
1	Earth strap, battery - body
12	Earth point, on left in engine compartment
132	Earth connection 3, in engine compartment wiring harness
501	Screw connection 2 (30), on relay plate
B131	Connection (54), in interior wiring harness
B150	Positive connection 2 (30a), in interior wiring harness

ws	=	white
sw	=	black
ro	=	red
br	=	brown
gn	=	green
bl	=	blue
gr	=	grey
li	=	purple
ge	=	yellow
or	=	orange
rs	=	pink

Protected by copyright. Copying for private, commercial purposes, in part or in whole, is not permitted unless authorised by Volkswagen AG. Volkswagen AG does not guarantee or accept any liability with respect to the correctness of information in this document. Copyright by Volkswagen AG.
satelettronica

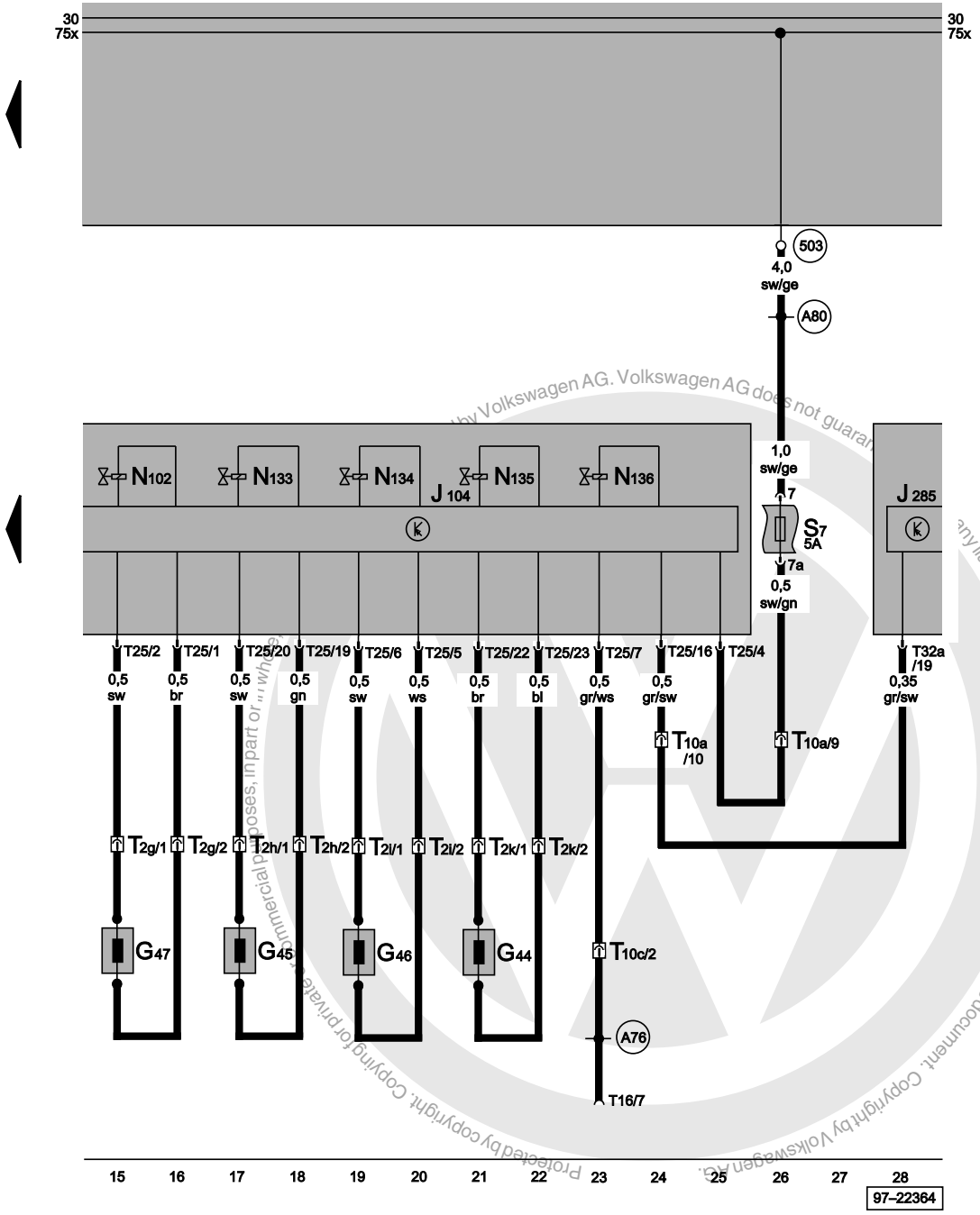

ABS control unit, inlet valves, dash panel insert, self-diagnosis connection

G44	Rear right speed sensor (00287)
G45	Front right speed sensor (00285)
G46	Rear left speed sensor (00290)
G47	Front left speed sensor ((00283)
J104	ABS control unit, on left in engine compartment
J285	Control unit with display in dash panel insert (01317)
N102	Front left ABS outlet valve (00265)
N133	Rear right ABS inlet valve
N134	Rear left ABS inlet valve
N135	Rear right ABS outlet valve
N136	Rear left ABS outlet valve
S7	Fuses on fuse holder
T2g	2-pin connector, black, behind left suspension strut
T2h	2-pin connector, black, behind right suspension strut
T2i	2-pin connector, under rear bench seat
T2k	2-pin connector, black, under rear bench seat
T10a	10-pin connector, green, near relay station
T10c	10-pin connector, blue, near relay station
T16	16-pin connector, self-diagnosis connection
T25	25-pin connector, black, on ABS control unit
T32a	32-pin connector, blue, on dash panel insert
503	Screw connection (75x), on relay plate
A76	Connection (K-diagnosis wire), in dash panel wiring harness
A80	Connection 1 (X), in dash panel wiring harness

ws	=	white
sw	=	black
ro	=	red
br	=	brown
gn	=	green
bl	=	blue
gr	=	grey
li	=	purple
ge	=	yellow
or	=	orange
rs	=	pink

satelettronica

Anti-locking brake system (ABS)

⇒ 1.4 ltr./44 kW Motronic, engine codes AEX, with automatic gearbox
⇒ 1.6 ltr./55 kW 1AV, engine code AEE, with automatic gearbox
From May 1997

For alternatives to relay and fuse positions as well as multi-pin connector wiring - see "Fitting locations" section.

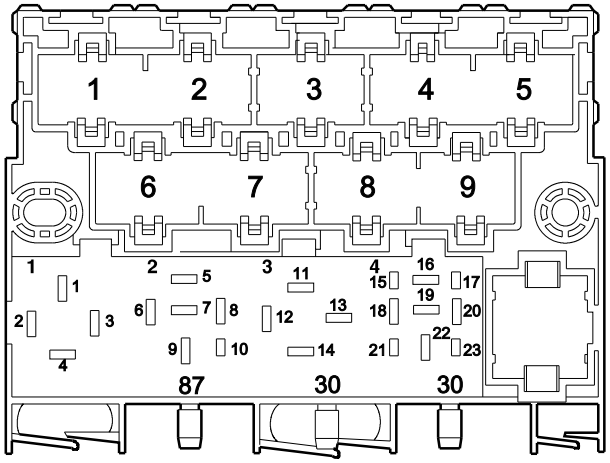

97--20672

Fuse colours

30 A - green
25 A - white
20 A - yellow
15 A - blue
10 A - red
7.5 A - brown
5 A - beige
3 A - lilac

Protected by copyright. Copying for private or commercial purposes, in part or in whole, is not permitted unless authorised by Volkswagen AG. Volkswagen AG does not guarantee or accept any liability with respect to the correctness of information in this document. Copyright by Volkswagen AG.
satelettronica

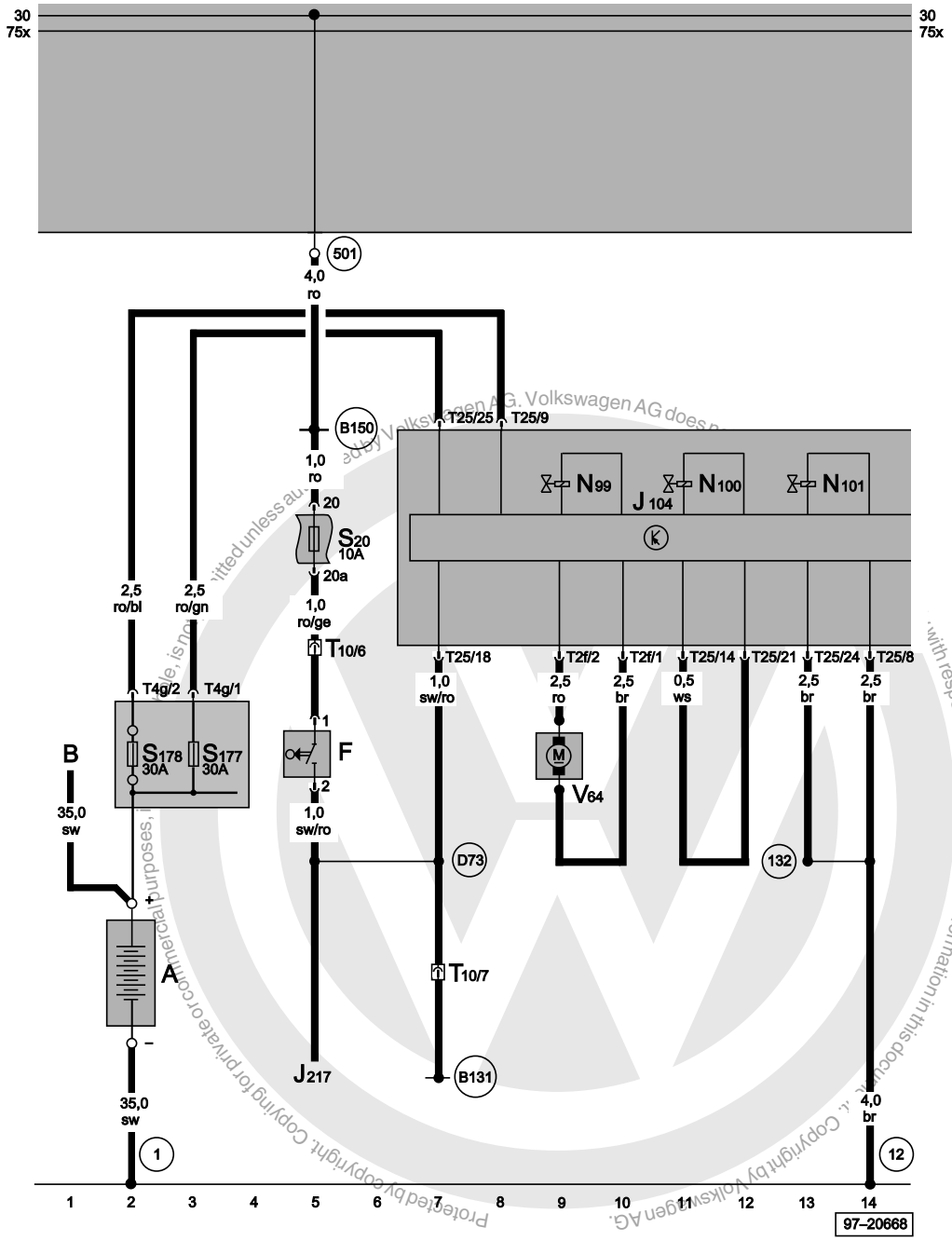

ABS control unit, brake light switch, fuses in battery fuse holder

A	Battery
B	Starter
F	Brake light switch
J104	ABS control unit, left in engine compartment
J217	Automatic gearbox control unit
N99	ABS inlet valve, front right
N100	ABS outlet valve, front right
N101	ABS inlet valve, front left
S20	Fuse in relay plate fuse box
S177	Fuse -5- (30), in battery fuse holder
S178	Fuse -6- (30), in battery fuse holder
T2f	2-pin connector, black
T4g	4-pin connector, black
T10	10-pin connector, white, near relay station
T25	25-pin connector, black
V64	ABS hydraulic pump, on ABS control unit
1	Earth strap, battery - body
12	Earth point, in engine compartment, left
132	Earth connection -3-, in engine compartment wiring harness
501	Screw connection -2- (30), on relay plate
B131	Connection (54), in interior wiring harness
B150	Positive connection -2- (30a), in interior wiring harness
D73	Positive connection (54), in engine compartment wiring harness

ws	=	white
sw	=	black
ro	=	red
br	=	brown
gn	=	green
bl	=	blue
gr	=	grey
li	=	purple
ge	=	yellow
or	=	orange
rs	=	pink

Protected by copyright. Copying for private or commercial purposes, is not permitted unless authorised by Volkswagen AG. Volkswagen AG does not guarantee or accept any liability with respect to the correctness of information in this document. Copyright by Volkswagen AG.

satelettronica

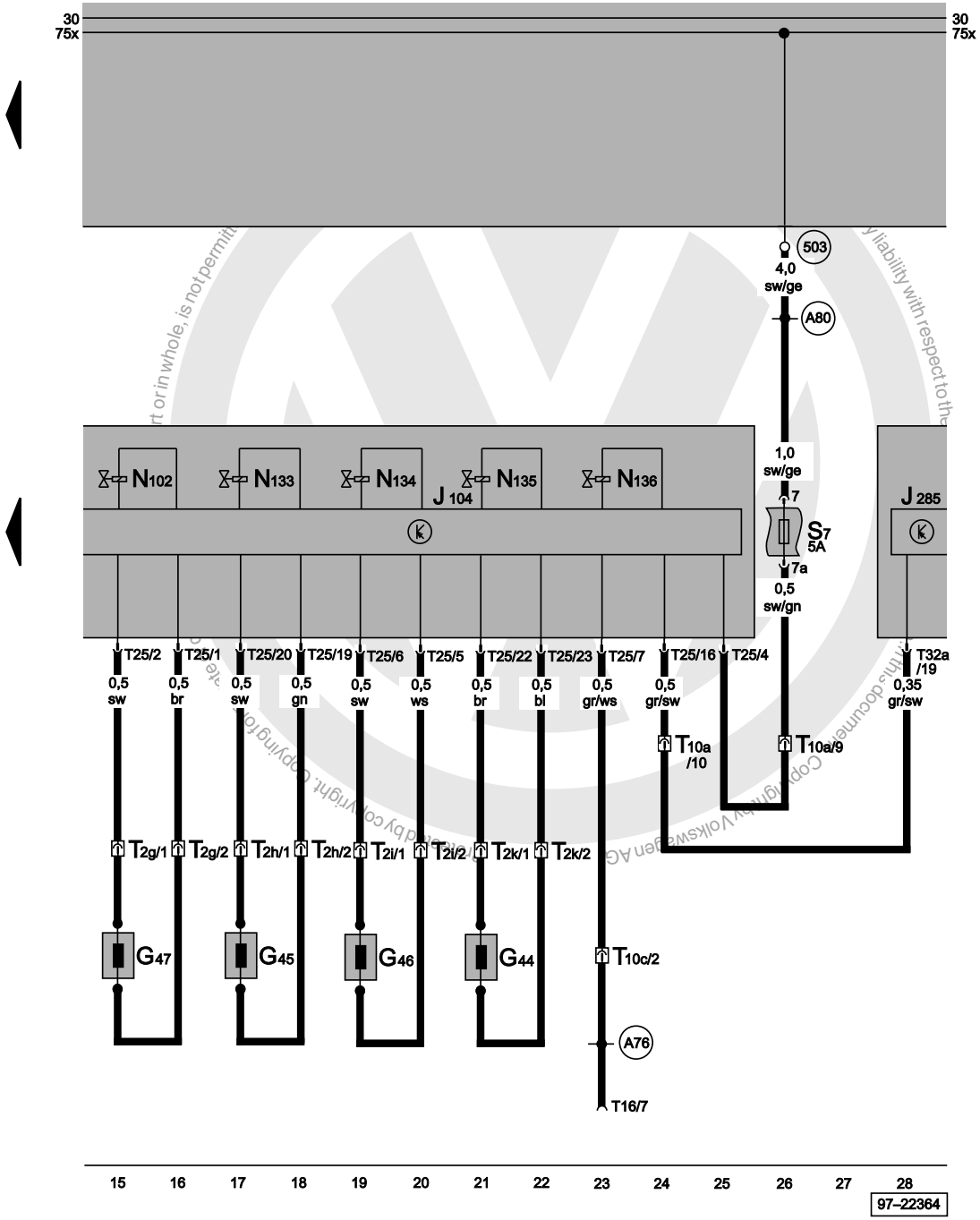

ABS control unit, inlet valves, dash panel insert, self-diagnosis connection

G44	Rear right speed sensor
G45	Front right speed sensor
G46	Rear left speed sensor
G47	Front left speed sensor
J104	ABS control unit, left in engine compartment
J285	Control unit with display in dash panel insert
N102	ABS outlet valve, front left
N133	ABS inlet valve, rear right
N134	ABS inlet valve, rear left
N135	ABS outlet valve, rear right
N136	ABS outlet valve, rear left
S7	Fuse in relay plate fuse box
T2g	2-pin connector, black, behind left suspension strut
T2h	2-pin connector, black, behind right suspension strut
T2i	2-pin connector, under rear seat
T2k	2-pin connector, black, under rear seat
T10a	10-pin connector, green, near relay station
T10c	10-pin connector, blue, near relay station
T16	16-pin connector, self-diagnosis connection, right in glove compartment
T25	25-pin connector, black, on ABS control unit
T32a	32-pin connector, blue, on dash panel insert
503	Screw connection (75x), on relay plate
A76	Connection (diagnosis wire K), in dash panel wiring harness
A80	Connection -1- (X), in dash panel wiring harness

ws	=	white
sw	=	black
ro	=	red
br	=	brown
gn	=	green
bl	=	blue
gr	=	grey
li = purple
ge = yellow
or = orange
rs = pink

satelettronica

Airbag

From May 1997

For alternatives to relay and fuse positions as well as multi-pin connector wiring - see "Fitting locations" section.

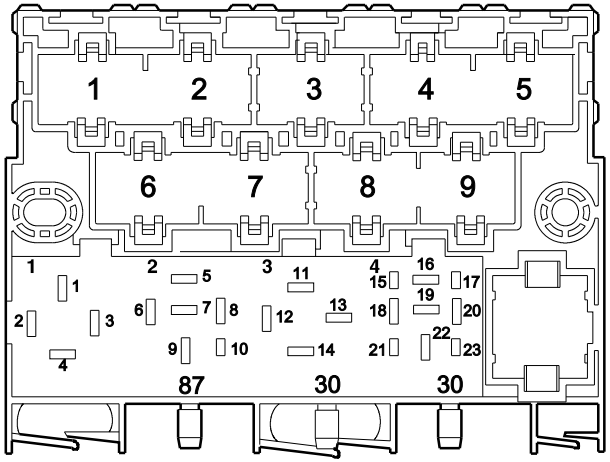

97--20672

Protected by copyright. Copying for private or commercial purposes, in part or in whole, is not permitted unless authorised by Volkswagen AG. Volkswagen AG does not guarantee or accept any liability with respect to the correctness of information in this document. Copyright by Volkswagen AG.

satelettronica

Fuse colours

30 A - green
25 A - white
20 A - yellow
15 A - blue
10 A - red
7.5 A - brown
5 A - beige
3 A - lilac

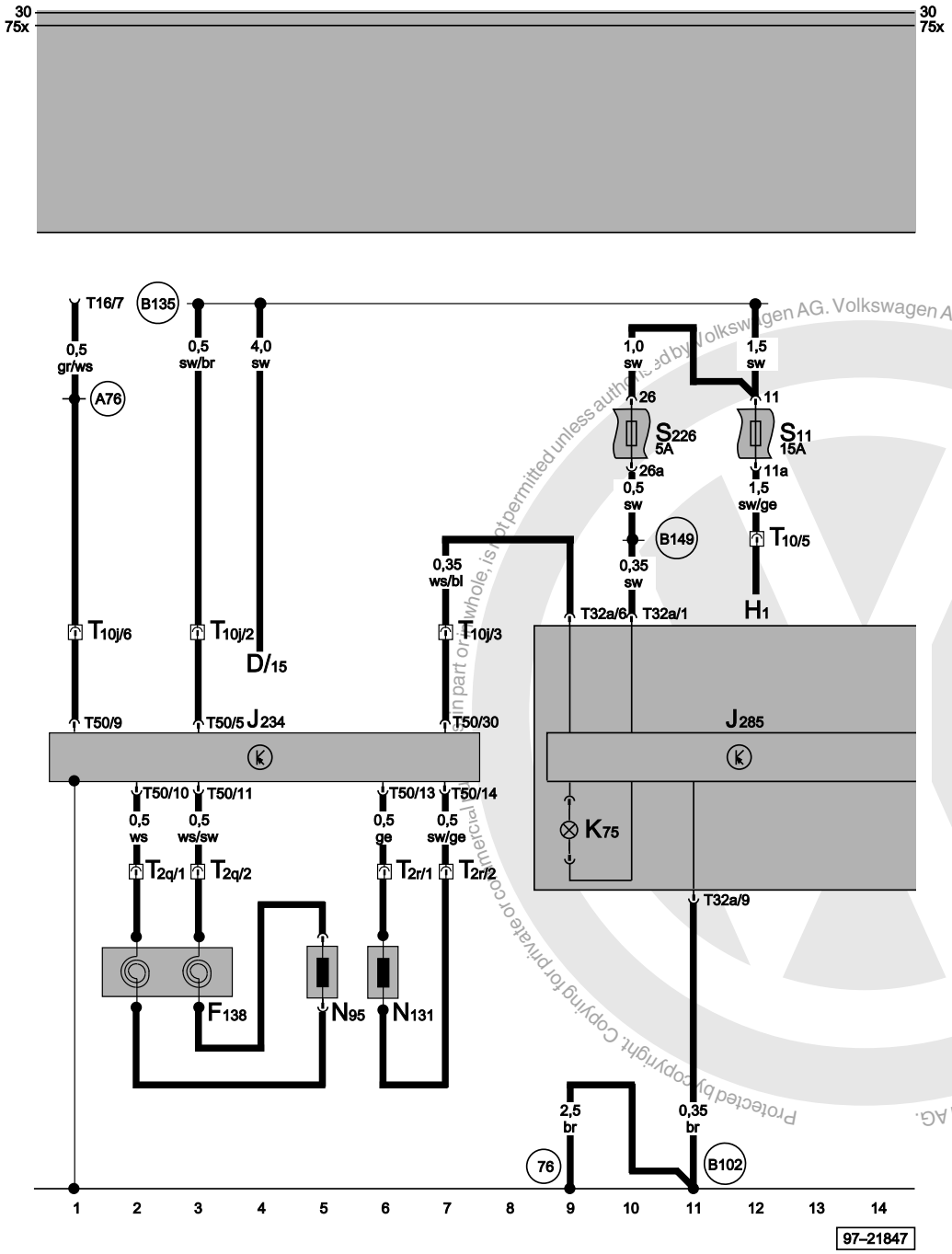

Airbag control unit, airbag warning lamp, airbag igniter, airbag coil connector, self-diagnosis connector

D	Ignition/starter switch
F138	Coil spring for airbag
H1	Horn
J234	Airbag control unit, behind console
J285	Control unit with display in dash panel insert
K75	Airbag warning lamp
N95	Airbag igniter, driver side
N131	Airbag igniter 1, front passenger side
S11	Fuse in relay plate fuse box
S226	Fuse in fuse holder
T2q	2-pin connector, black, behind steering column switch trim
T2r	2-pin connector, black, right behind dash panel
T10	10-pin connector, white, near relay station
T10j	10-pin connector, yellow, near relay station
T16	16-pin connector, self-diagnosis connection, right in glove compartment
T32a	32-pin connector, blue
T50	50-pin connector, black
76	Earth point, near selector mechanism
A76	Connection (diagnosis wire K), in dash panel wiring harness
B102	Earth connection, in front left interior wiring harness
B135	Connection (15a), in interior wiring harness
B149	Positive connection -2- (15a), in interior wiring harness

ws	=	white
sw	=	black
ro	=	red
br	=	brown
gn	=	green
bl	=	blue
gr	=	grey
li	=	purple
ge	=	yellow
or	=	orange
rs	=	pink

Protected by copyright. Copying for private or commercial purposes, in part or in whole, is not permitted unless authorised by Volkswagen AG. Volkswagen AG does not guarantee or accept any liability with respect to the correctness of information in this document. Copyright by Volkswagen AG.

satelettronica

Exterior mirror, heated and adjustable

From May 1997

For alternatives to relay and fuse positions as well as multi-pin connector wiring - see "Fitting locations" section.

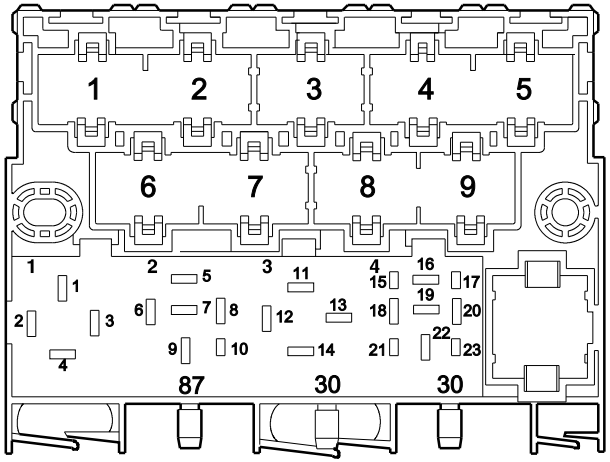

97--20672

Fuse colours

30 A - green
25 A - white
20 A - yellow
15 A - blue
10 A - red
7.5 A - brown
5 A - beige
3 A - lilac

Protected by copyright. Copying for private or commercial purposes, in part or in whole, is not permitted unless authorised by Volkswagen AG. Volkswagen AG does not guarantee or accept any liability with respect to the correctness of information in this document. Copyright by Volkswagen AG.

satelettronica

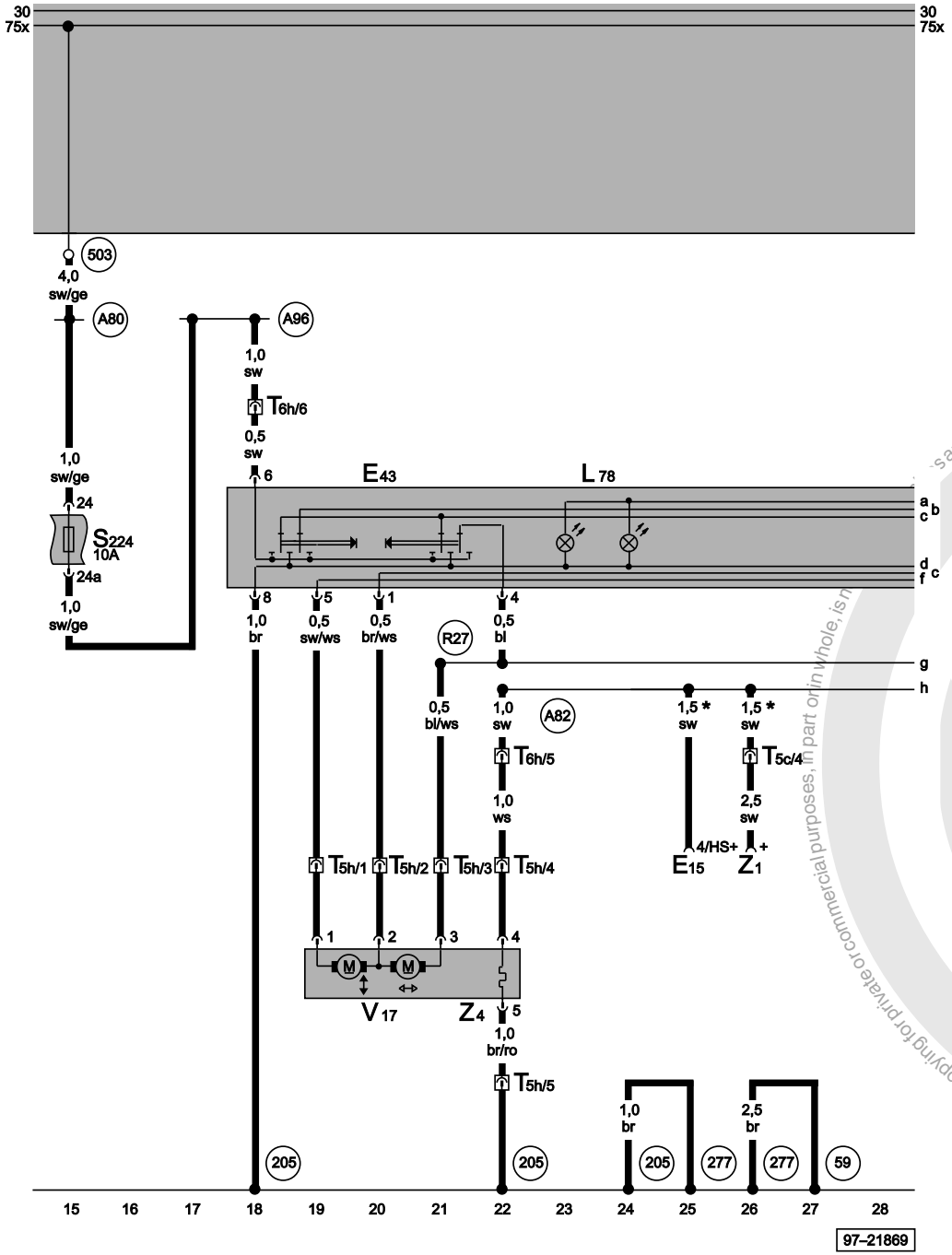

Mirror adjustment switch, mirror adjustment motor (driver's side), heated exterior mirror (driver's side)

E15	Heated rear window switch
E43	Mirror adjustment switch
L78	Mirror adjustment switch illumination
S224	Fuse in fuse holder
T5c	5-pin connector, black, in tailgate wiring harness - feeder
T5h	5-pin connector, black, in driver's door
T6h	pin connector, black, left on lower A-pillar
V17	Mirror adjustment motor, driver's side
Z1	Heated rear window
Z4	Heated exterior mirror, driver's side
59	Earth point, near left-hand tail light
205	Earth connection, in driver's door wiring harness
277	Earth connection -3-, in interior wiring harness
503	Screw connection (75x), on relay plate
A80	Connection -1- (X), in dash panel wiring harness
A82	Connection (windscreen heater), in dash panel wiring harness
A96	Connection (53a), in dash panel wiring harness
R27	Connection (mirror adjustment), in driver's door wiring harness
*	2.5 mm² cross section from model year 1998

ws	=	white
sw	=	black
ro	=	red
br	=	brown
gn	=	green
bl	=	blue
gr	=	grey
li	=	purple
ge	=	yellow
or	=	orange
rs	=	pink

satelettronica

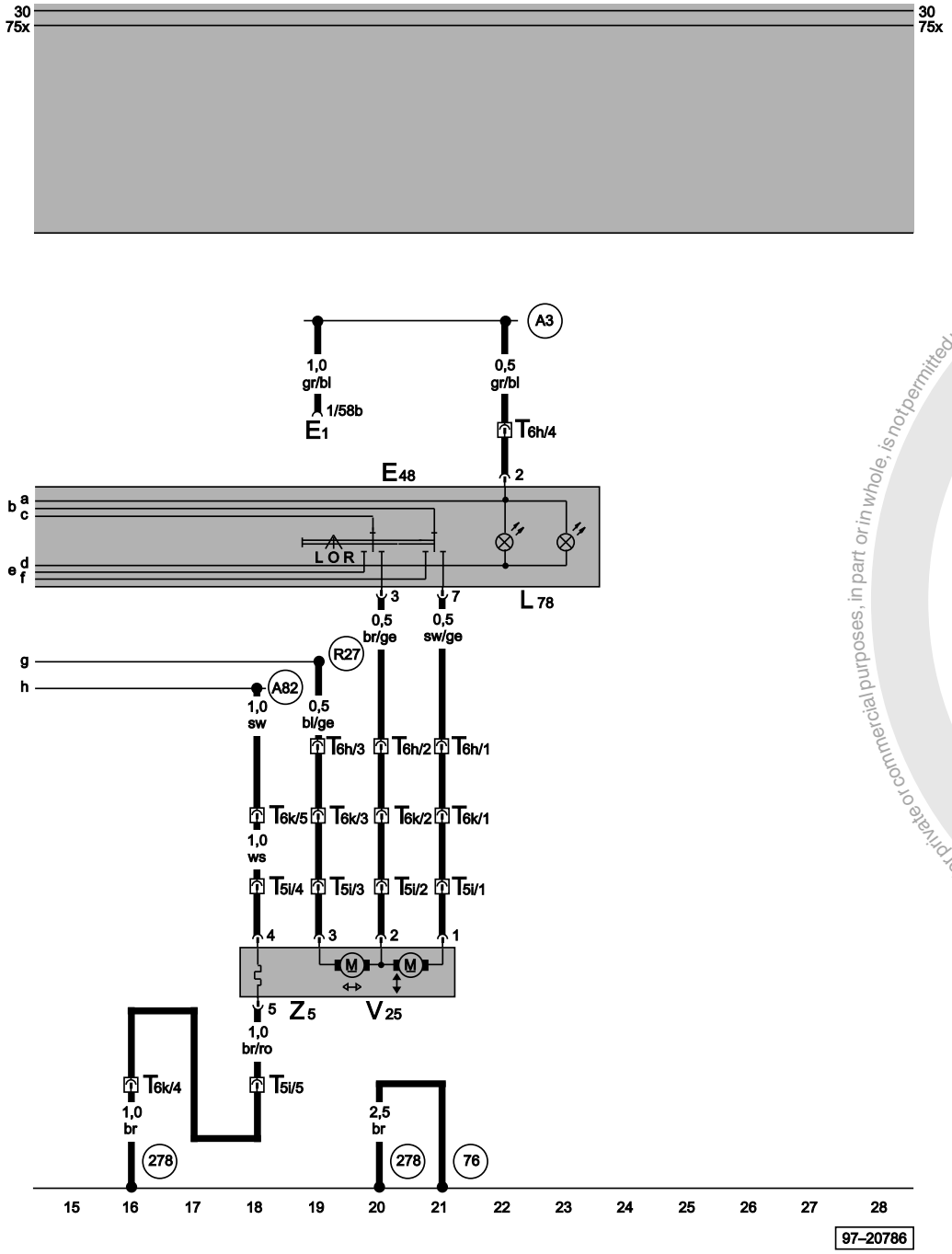

Mirror adjustment change-over switch, mirror adjustment motor (passenger's side), heated exterior mirror (passenger's side)

E1	Lighting switch
E48	Mirror adjustment change-over switch
L78	Mirror adjustment switch illumination
T5i	5-pin connector, black, in passenger's door
T6h	pin connector, black, left on lower A-pillar
T6k	Single connector, black, right on lower A-pillar
V25	Mirror adjustment motor, front passenger side
Z5	Heated exterior mirror, front passenger's side
76	Earth point, near selector mechanism
278	Earth connection -4-, in interior wiring harness
A3	Positive (+) connection (58), in dash panel wiring harness
A82	Connection (windscreen heater), in dash panel wiring harness
R27	Connection (mirror adjustment), in driver's door wiring harness

ws	=	white
sw	=	black
ro	=	red
br	=	brown
gn	=	green
bl	=	blue
gr	=	grey
li	=	purple
ge	=	yellow
or	=	orange
rs	=	pink

Protected by copyright. Copying for private or commercial purposes, in part or in whole, is not permitted unless authorised by Volkswagen AG. Copyright by Volkswagen AG. No liability will be accepted for the correctness of information in this document.
satelettronica

Fabric sunroof

From May 1997

For alternatives to relay and fuse positions as well as multi-pin connector wiring - see "Fitting locations" section.

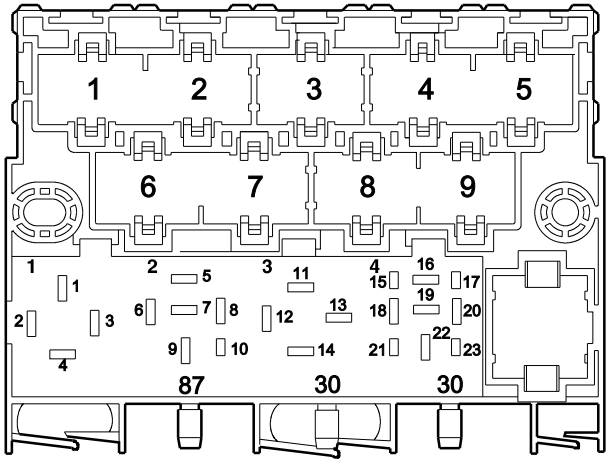

97--20672

Protected by copyright. Copying for private or commercial purposes, in part or in whole, is not permitted unless authorised by Volkswagen AG. Volkswagen AG does not guarantee or accept any liability with respect to the correctness of information in this document. Copyright by Volkswagen AG.

satelettronica

Fuse colours

30 A - green
25 A - white
20 A - yellow
15 A - blue
10 A - red
7.5 A - brown
5 A - beige
3 A - lilac

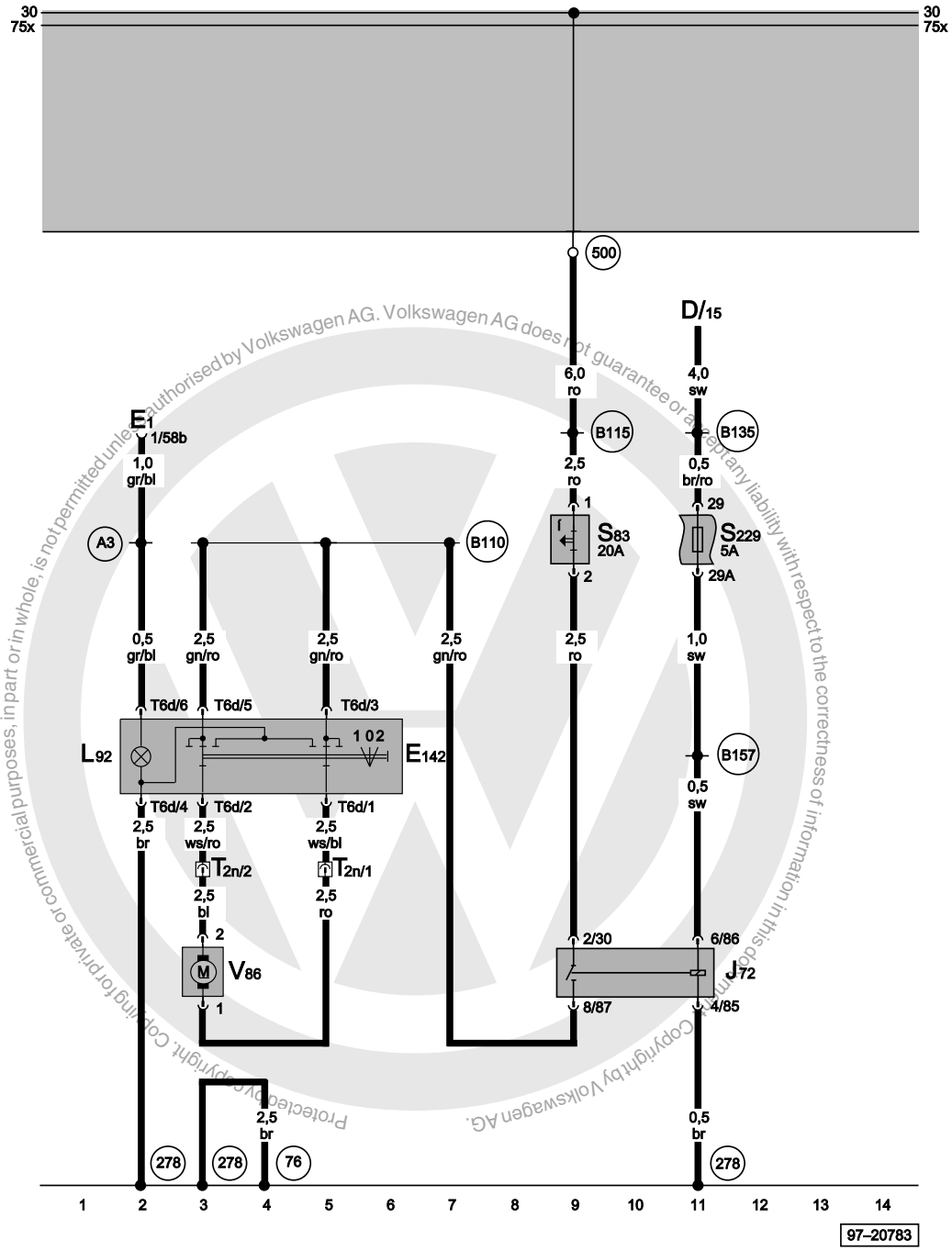

Folding sliding roof switch, folding sliding roof motor, folding sliding roof relay

D	Ignition/starter switch
E1	Lighting switch
E142	Fabric sunroof switch
J72	Sliding sunroof relay
L92	Folding fabric sunroof switch illumination
S83	Sliding sunroof thermo-fuse
S229	Fuse in fuse holder
T2n	2-pin connector, black, left behind dash panel
T6d	6-pin connector, black
V86	Folding fabric sunroof motor
76	Earth point, near selector mechanism
278	Earth connection -4-, in interior wiring harness
500	Screw connection -1- (30), on relay plate
A3	Positive (+) connection (58), in dash panel wiring harness
B110	Connection (30, electric windows), in interior wiring harness
B115	Positive connection (30, central electrics), in interior wiring harness
B135	Connection (15a), in interior wiring harness
B157	Positive connection -3- (15a), in interior wiring harness

ws	=	white
sw	=	black
ro	=	red
br	=	brown
gn	=	green
bl	=	blue
gr	=	grey
li = purple
ge = yellow
or = orange
rs = pink

Protected by copyright. Copying for private or commercial purposes, in part or in whole, is not permitted unless authorised by Volkswagen AG. Volkswagen AG does not guarantee or accept any liability with respect to the correctness of information in this document. Copyright by Volkswagen AG.

satelettronica

Window lifter, front

From May 1997

For alternatives to relay and fuse positions as well as multi-pin connector wiring - see "Fitting locations" section.

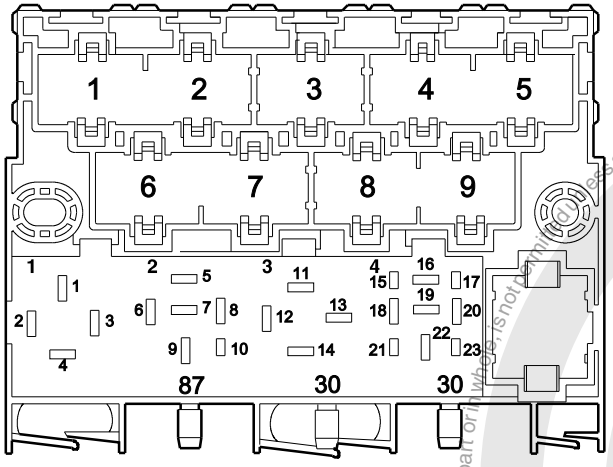

97--20672

Fuse colours

30 A - green
25 A - white
20 A - yellow
15 A - blue
10 A - red
7.5 A - brown
5 A - beige
3 A - lilac

Protected by copyright. Copying for private or commercial purposes, in part or in whole, is not permitted unless authorised by Volkswagen AG. Volkswagen AG does not guarantee or accept any liability with respect to the correctness of information in this document. Copyright by Volkswagen AG.

satelettronica

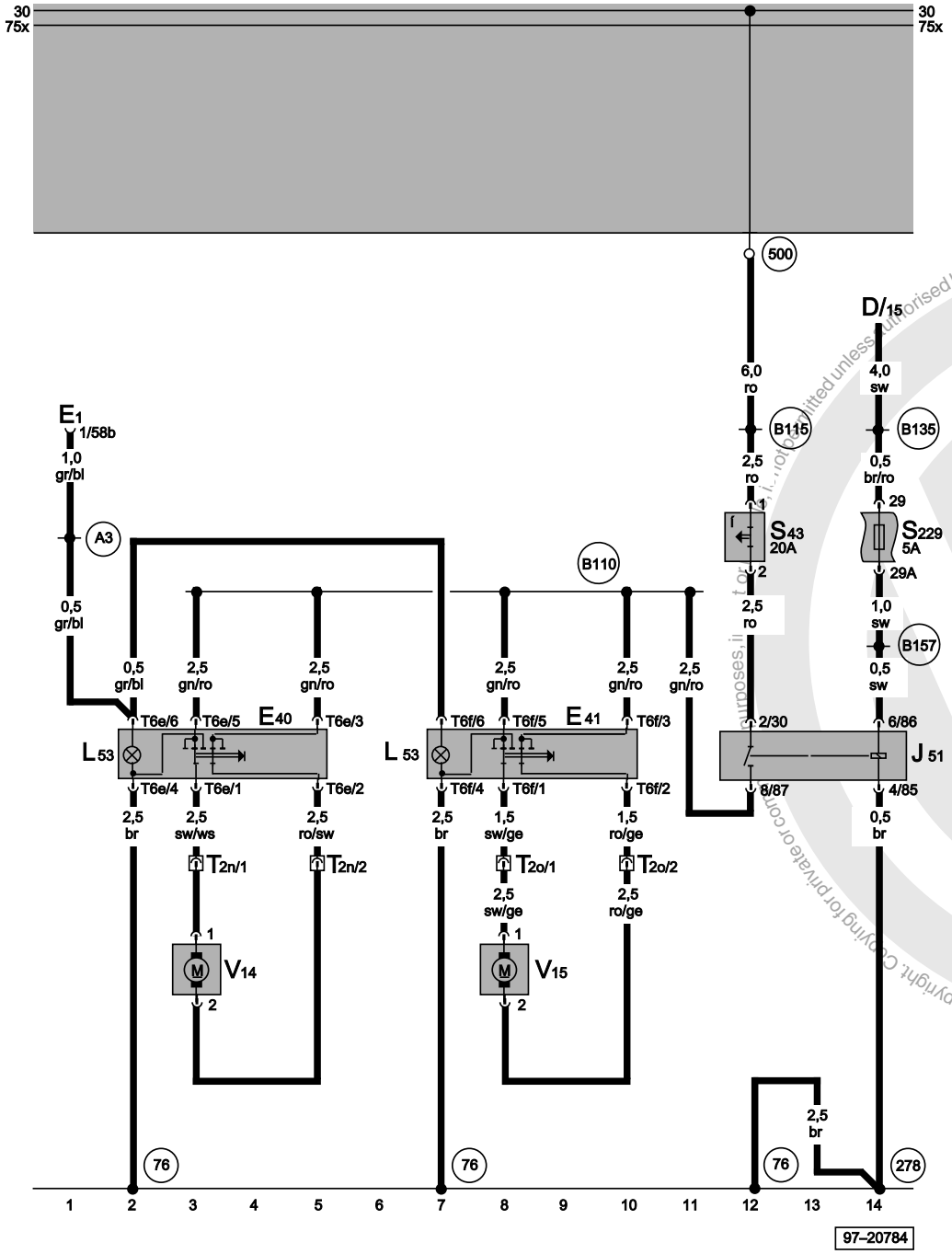

Window lifter, front

D	Ignition/starter switch
E1	Lighting switch
E40	Front left electric window switch
E41	Electric window switch, front right
J51	Electric window relay, next to relay plate
L53	Electric window switch light bulb
S43	Electric window thermo-fuse
S229	Fuse in fuse holder
T2n	2-pin connector, black, left on lower A-pillar
T2o	2-pin connector, black, right on lower A-pillar
T6e	6-pin connector, black
T6f	6-pin connector, black
V14	Electric window motor, left
V15	Electric window motor, right
76	Earth point, near selector mechanism
278	Earth connection -4-, in interior wiring harness
500	Screw connection -1- (30), on relay plate
A3	Positive (+) connection (58), in dash panel wiring harness
B110	Connection (30, electric windows), in interior wiring harness
B115	Positive connection (30, central electrics), in interior wiring harness
B135	Connection (15a), in interior wiring harness
B157	Positive connection -3- (15a), in interior wiring harness

ws	=	white
sw	=	black
ro	=	red
br	=	brown
gn	=	green
bl	=	blue
gr	=	grey
li = purple
ge = yellow
or = orange
rs = pink

satelettronica

Air conditioning system

From May 1997

Notes:

For information concerning

- Relay and fuse assignment
- Multi-pin connectors
- Control units and relays
- Earth connections

⇒ Overview of Fitting Locations!

For information concerning

- Fault Finding Programs

⇒ Guided Fault Finding

Protected by copyright. Copying for private or commercial purposes, in part or in whole, is not permitted unless authorised by Volkswagen AG. Volkswagen AG does not guarantee or accept any liability with respect to the correctness of information in this document. Copyright by Volkswagen AG.

satelettronica

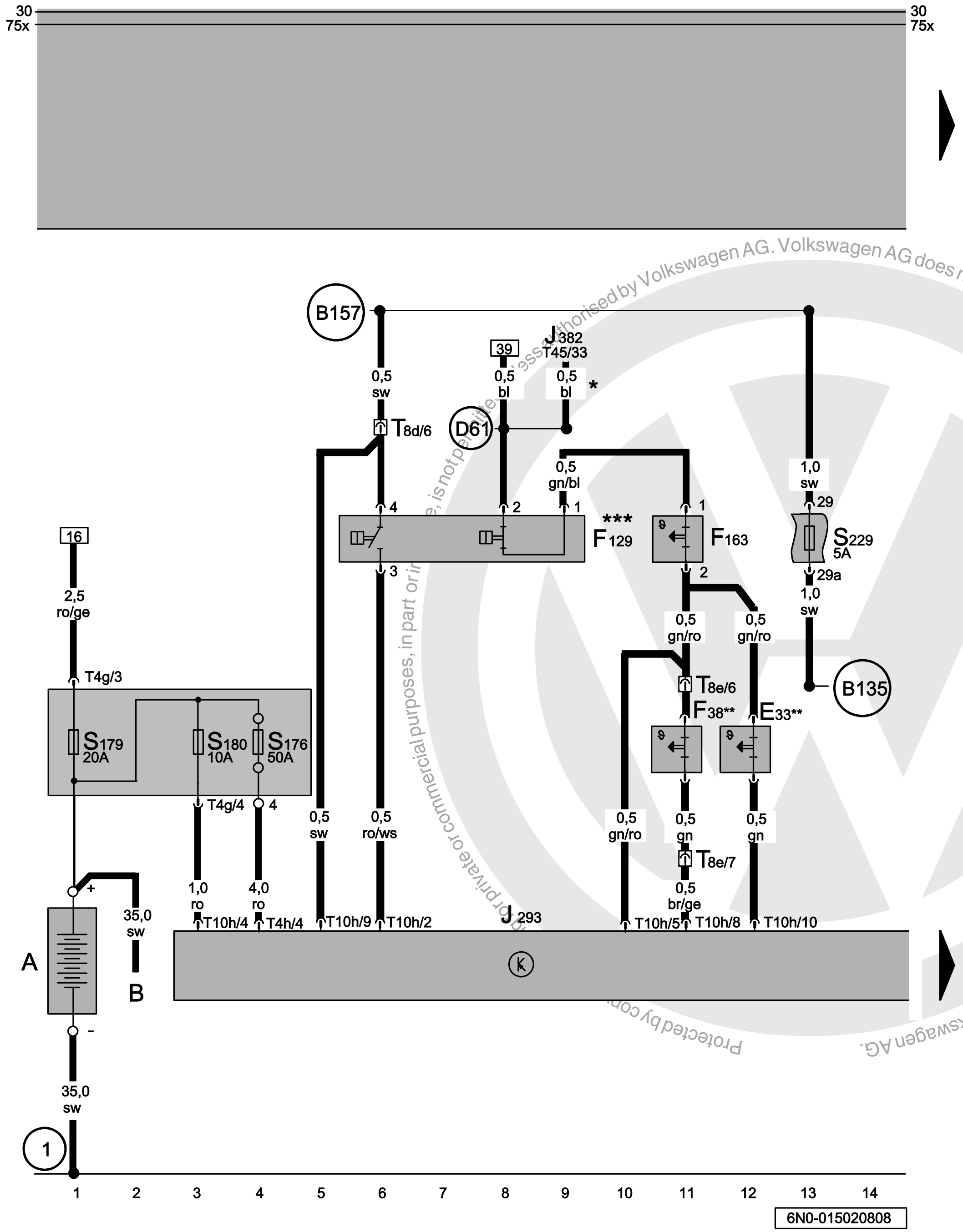

Radiator fan control unit, air conditioning system pressure switch, ambient temperature sender

A	Battery
B	Starter
E33	Temperature switch for evaporator, in air conditioner unit
F38	Ambient temperature switch, in plenum chamber
F129	Air conditioning system pressure switch
F163	Air conditioning system shut-off thermal switch, on engine
J293	Radiator fan control unit, in front left of engine compartment
J382	1AV injection system control unit
S176	Fuse 4 (30), on battery fuse holder
S179	Fuse 7 (30), on battery fuse holder
S180	Fuse 8 (30), on battery fuse holder
S229	Fuse on fuse holder
T4g	4-pin connector, black, near battery
T4h	4-pin connector, black
T8d	8-pin connector, black, behind dash panel
T8e	8-pin connector, black
T10h	10-pin connector, black
T45	45-pin connector
1	Earth strap, battery - body
B135	Connection 1 (15a), in interior wiring harness
B157	Positive connection 3 (15a), in interior wiring harness
D61	Connection (air conditioning system), in engine compartment wiring harness
*	Not for engine code AER
**	Optional installation
***	Up to September 1999

ws	=	white
sw	=	black
ro	=	red
br	=	brown
gn	=	green
bl	=	blue
gr	=	grey
li	=	purple
ge	=	yellow
or	=	orange
rs	=	pink

satelettronica

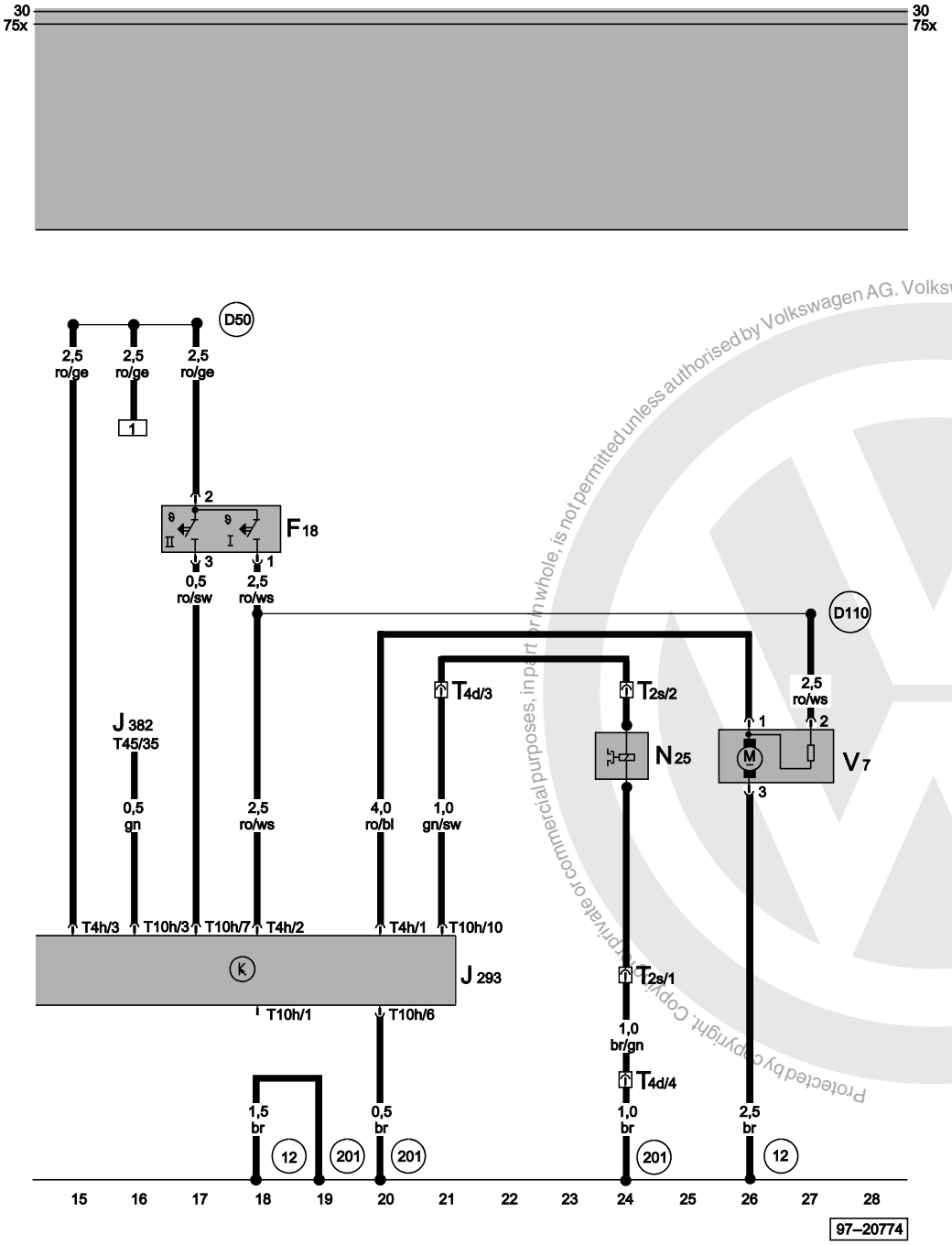

Radiator fan control unit, magnetic coupling for radiator fan

F18	Thermal switch for radiator fan
J293	Radiator fan control unit, in front left of engine compartment
J382	1AV injection system control unit, right in plenum chamber
N25	Air conditioning system magnetic clutch
T4d	4-pin connector, black, on gearbox
T2s	2-pin connector, black, near compressor
T4h	4-pin connector, black
T10h	10-pin connector, black
T45	45-pin connector, black
V7	Radiator fan
12	Earth point, on left in engine compartment
201	Earth connection 5, in engine compartment wiring harness
D50	Positive connection (30), in engine compartment wiring harness
D110	Connection 8, in engine compartment wiring harness

ws	=	white
sw	=	black
ro	=	red
br	=	brown
gn	=	green
bl	=	blue
gr	=	grey
li	=	purple
ge	=	yellow
or	=	orange
rs	=	pink

Protected by copyright. Copyright by Volkswagen AG.
Volkswagen AG does not guarantee or accept any liability with respect to the correctness of information in this document. Copyright by Volkswagen AG.
Protected by copyright. Copyright by Volkswagen AG.
Reproduction, in part or in whole, is not permitted unless authorised by Volkswagen AG. Volkswagen AG does not guarantee or accept any liability with respect to the correctness of information in this document. Copyright by Volkswagen AG.
Reproduction for private or commercial purposes, in part or in whole, is not permitted unless authorised by Volkswagen AG. Volkswagen AG does not guarantee or accept any liability with respect to the correctness of information in this document. Copyright by Volkswagen AG.
satelettronica

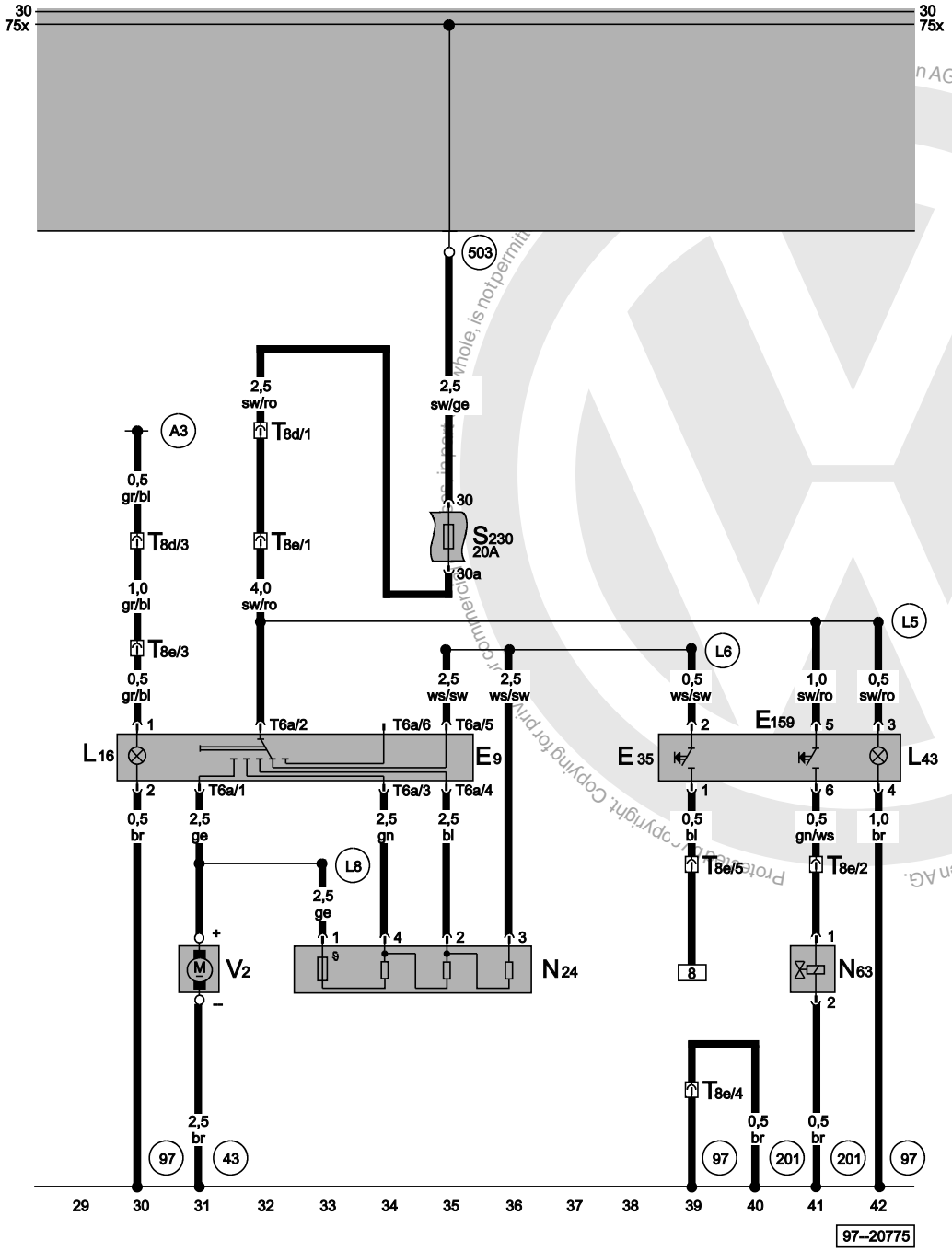

Fresh air blower switch, air conditioning system switch, fresh air/recirculated air flap switch

E9	Fresh air blower switch
E35	Air conditioning system switch
E159	Fresh air/air recirculation flap switch
L16	Fresh air regulator illumination bulb
L43	Air conditioning system switch illumination bulb
N24	Fresh air blower series resistor with overheating fuse
N63	Fresh air/air recirculation flap two-way valve
S230	Fuse on fuse holder
T6a	6-pin connector, black
T8d	8-pin connector, black, behind dash panel
T8e	8-pin connector, black, on left behind console
V2	Fresh air blower
43	Earth point, lower part of right A-pillar
97	Earth connection 1, in air conditioning system wiring harness
201	Earth connection 5, in engine compartment wiring harness
503	Screw connection (75x), on relay plate
A3	Positive connection (58), in dash panel wiring harness
L5	Connection 1, in evaporator housing unit wiring harness
L6	Connection 2, in evaporator housing unit wiring harness
L8	Connection 4, in evaporator housing unit wiring harness

ws	=	white
sw	=	black
ro	=	red
br	=	brown
gn	=	green
bl	=	blue
gr	=	grey
li	=	purple
ge	=	yellow
or	=	orange
rs	=	pink

satelettronica

Seat heating, driver's and passenger's side

From May 1997

For alternatives to relay and fuse positions as well as multi-pin connector wiring - see "Fitting locations" section.

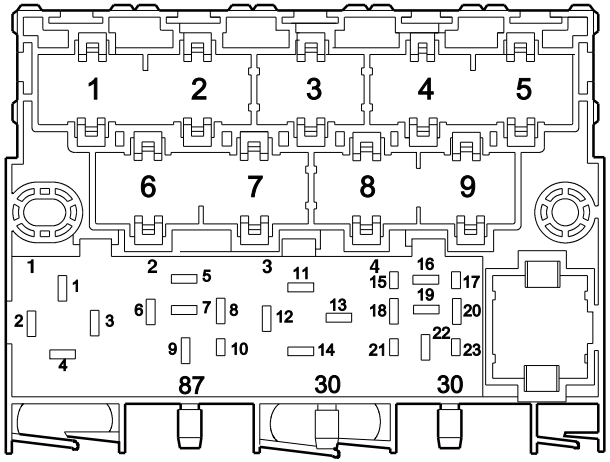

97--20672

Fuse colours

30 A - green
25 A - white
20 A - yellow
15 A - blue
10 A - red
7.5 A - brown
5 A - beige
3 A - lilac

Protected by copyright. Copying for private or commercial purposes, in part or in whole, is not permitted unless authorised by Volkswagen AG. Volkswagen AG does not guarantee or accept any liability with respect to the correctness of information in this document. Copyright by Volkswagen AG.

satelettronica

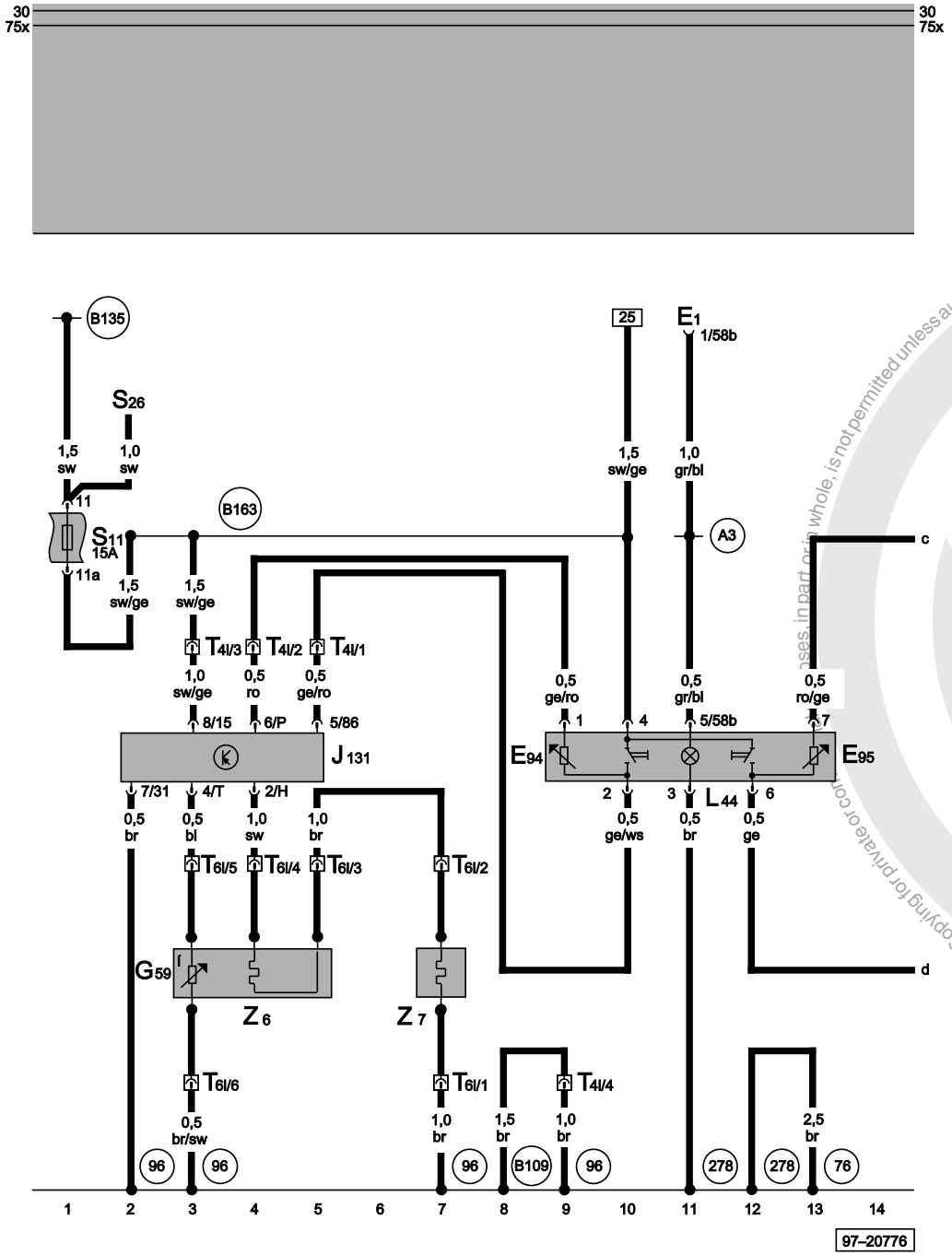

Driver's seat heating

E1	Lighting switch
E94	Heated driver seat adjuster
E95	Heated front passenger seat adjuster
G59	Driver`s seat temperature sensor
J131	Heated driver's seat control unit, under driver's seat
L44	Seat heating switch light bulb
S11	Fuse in relay plate fuse box
S26	Fuse in relay plate fuse box
T4l	4-pin connector, black, under driver's seat
T6l	6-pin connector, black, under driver's seat
Z6	Heated driver's seat
Z7	Heated driver's seat backrest
76	Earth point, near selector mechanism
96	Earth connection -1-, in seat heating wiring harness
278	Earth connection -4-, in interior wiring harness
A3	Positive (+) connection (58), in dash panel wiring harness
B109	Earth connection, in rear left interior wiring harness
B135	Connection (15a), in interior wiring harness
B163	Positive connection -1- (15a), in interior wiring harness

ws	=	white
sw	=	black
ro	=	red
br	=	brown
gn	=	green
bl	=	blue
gr	=	grey
li	=	purple
ge	=	yellow
or	=	orange
rs	=	pink

Reproduced by copyright. Copyright by Volkswagen AG. Copying for private or commercial purposes, in part or in whole, is not permitted unless authorised by Volkswagen AG. Volkswagen AG does not guarantee or accept any liability with respect to the correctness of information in this document. Copyright by Volkswagen AG.
satelettronica

Front passenger's seat heating

G60	Front passenger`s seat temperature sensor
J132	Heated front passenger's seat control unit, under front passenger's seat
T4m	4-pin connector, black, under front passenger's seat
T6m	6-pin connector, black, under front passenger's seat
Z8	Heated front passenger's seat
Z9	Heated front passenger seat backrest
59	Earth point, near left-hand tail light
136	Earth connection -2-, in seat heating wiring harness
B109	Earth connection, in rear left interior wiring harness

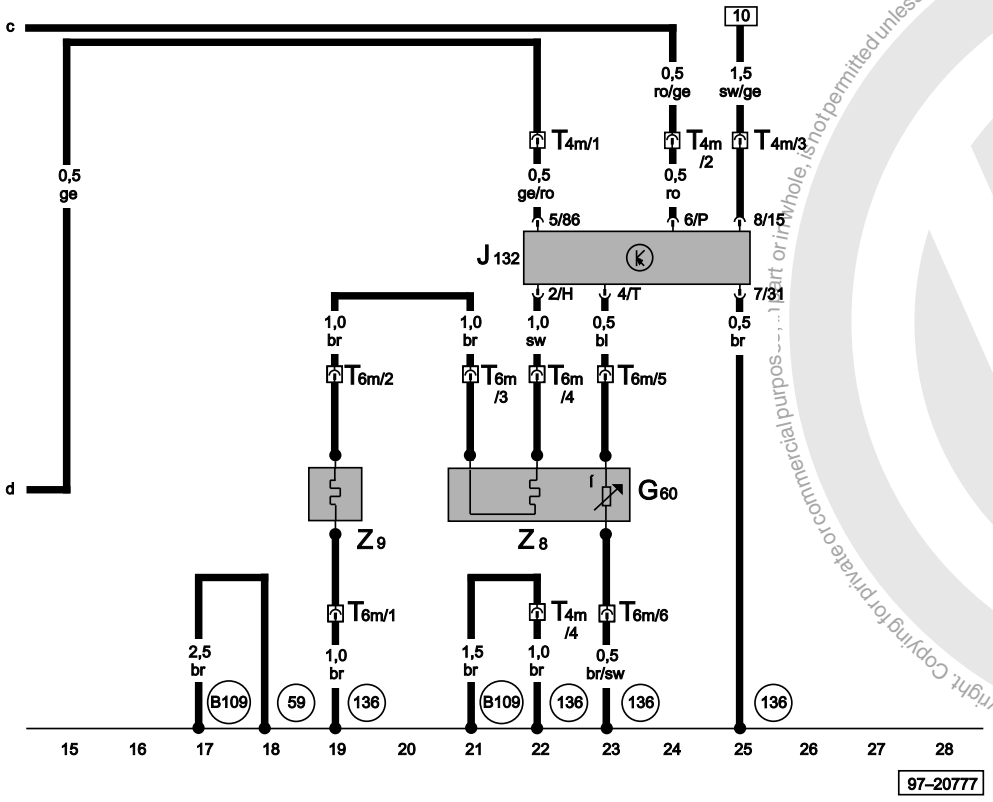

ws	=	white
sw	=	black
ro	=	red
br	=	brown
gn	=	green
bl	=	blue
gr	=	grey
li	=	purple
ge	=	yellow
or	=	orange
rs	=	pink

Protected by copyright. Copying for private or commercial purposes, in part or in whole, is not permitted unless authorised by Volkswagen AG. Volkswagen AG does not guarantee or accept any liability with respect to the correctness of information in this document. Copyright by Volkswagen AG.

satelettronica

Headlight washer system

From May 1997

For alternatives to relay and fuse positions as well as multi-pin connector wiring - see "Fitting locations" section.

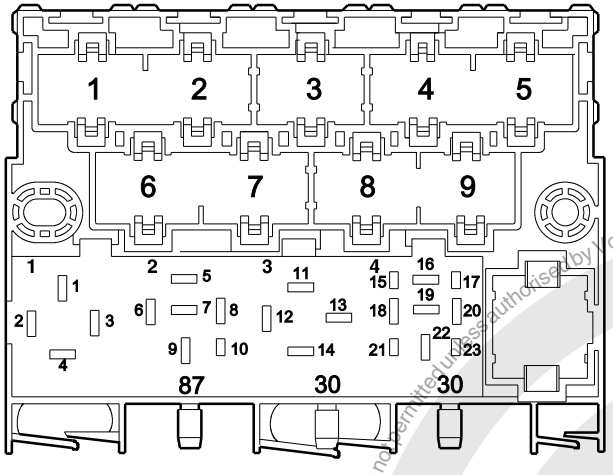

97--20672

Fuse colours

30 A - green
25 A - white
20 A - yellow
15 A - blue
10 A - red
7.5 A - brown
5 A - beige
3 A - lilac

Protected by copyright. Copying for private or commercial purposes, in part or in whole, is not permitted unless authorised by Volkswagen AG. Volkswagen AG does not guarantee or accept any liability with respect to the correctness of information in this document. Copyright by Volkswagen AG.

satelettronica

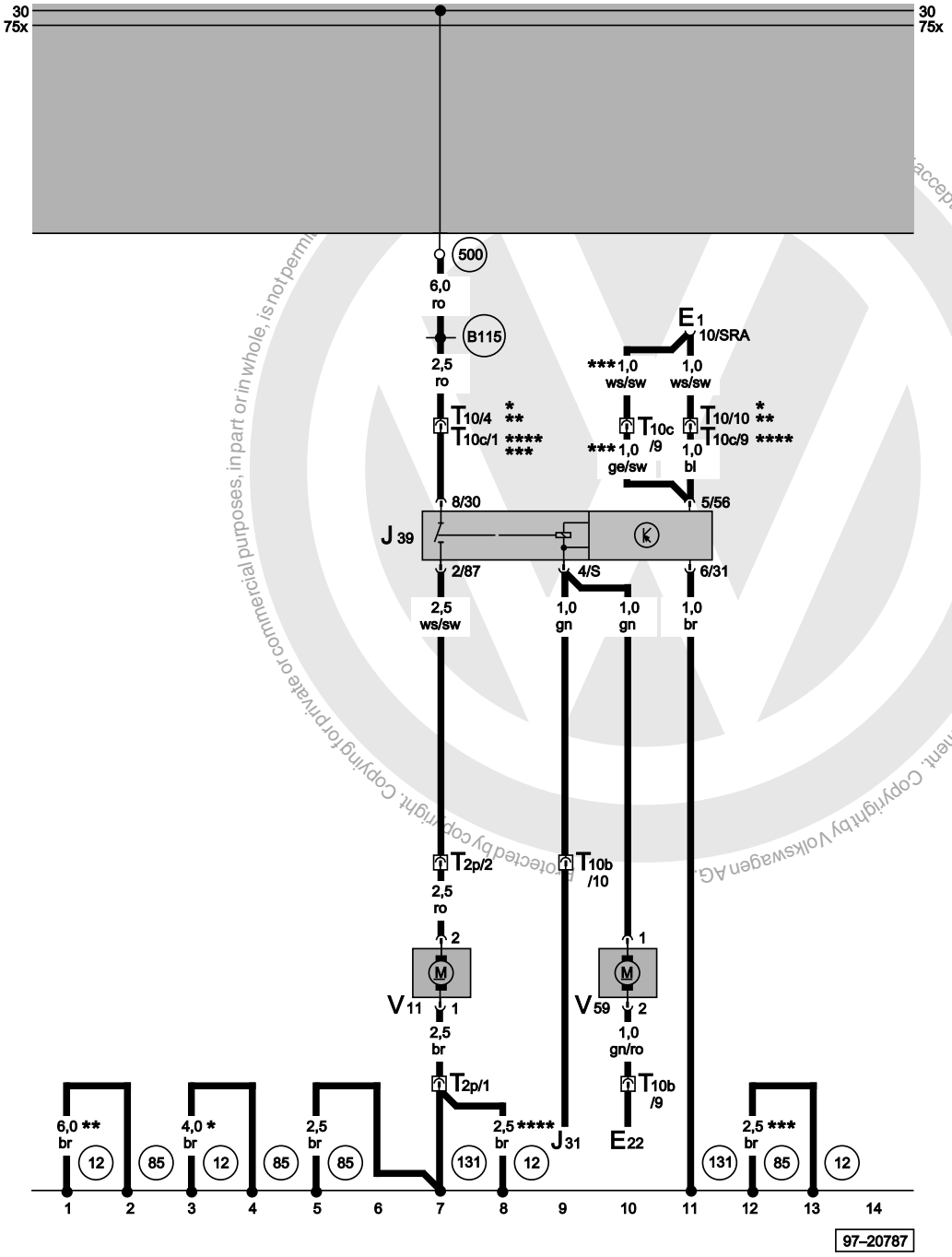

Headlight washer system

E1	Lighting switch
E22	Intermittent wiper switch
J31	Automatic intermittent wash/wipe relay, relay station
J39	Headlight washer system relay, front in engine compartment
T2p	2-pin connecctor, black, near headlight washer pump
T10	10-pin connector, white, near relay station
T10b	10-pin connector, black, near relay station
T10c	10-pin connector, blue, near relay station
V11	Headlight washer system pump
V59	Windscreen and rear window washer pump
12	Earth point, in engine compartment, left
85	Earth connection -1-, in engine compartment wiring harness
131	Earth connection -3-, in engine compartment wiring harness
500	Screw connection -1- (30), on relay plate
B115	Positive connection (30, central electrics), in interior wiring harness
*	For petrol engine with manual gearbox only
**	For petrol engine with automatic gearbox only
***	For engine codes AGD and AHG only
****	For engine code AEF only

ws	=	white
sw	=	black
ro	=	red
br	=	brown
gn	=	green
bl	=	blue
gr	=	grey
li	=	purple
ge	=	yellow
or	=	orange
rs	=	pink

satelettronica

Daylight driving lights

From May 1997

For alternatives to relay and fuse positions as well as multi-pin connector wiring - see "Fitting locations" section.

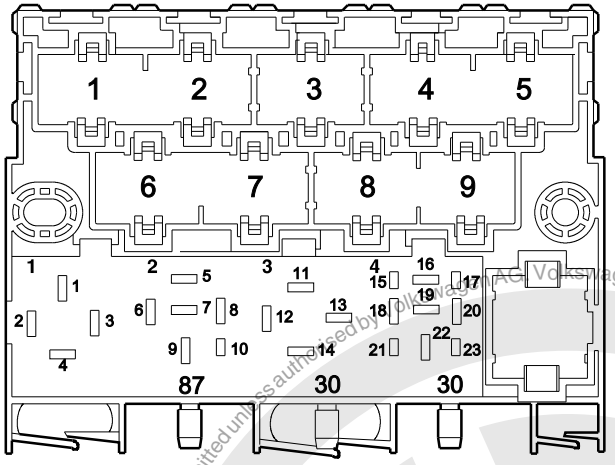

97--20672

Fuse colours

30 A - green
25 A - white
20 A - yellow
15 A - blue
10 A - red
7.5 A - brown
5 A - beige
3 A - lilac

Protected by copyright. Copying for private or commercial purposes, in part or in whole, is not permitted unless authorised by Volkswagen AG. Copyright by Volkswagen AG. Volkswagen AG does not guarantee or accept any liability with respect to the correctness of information in this document.

satelettronica

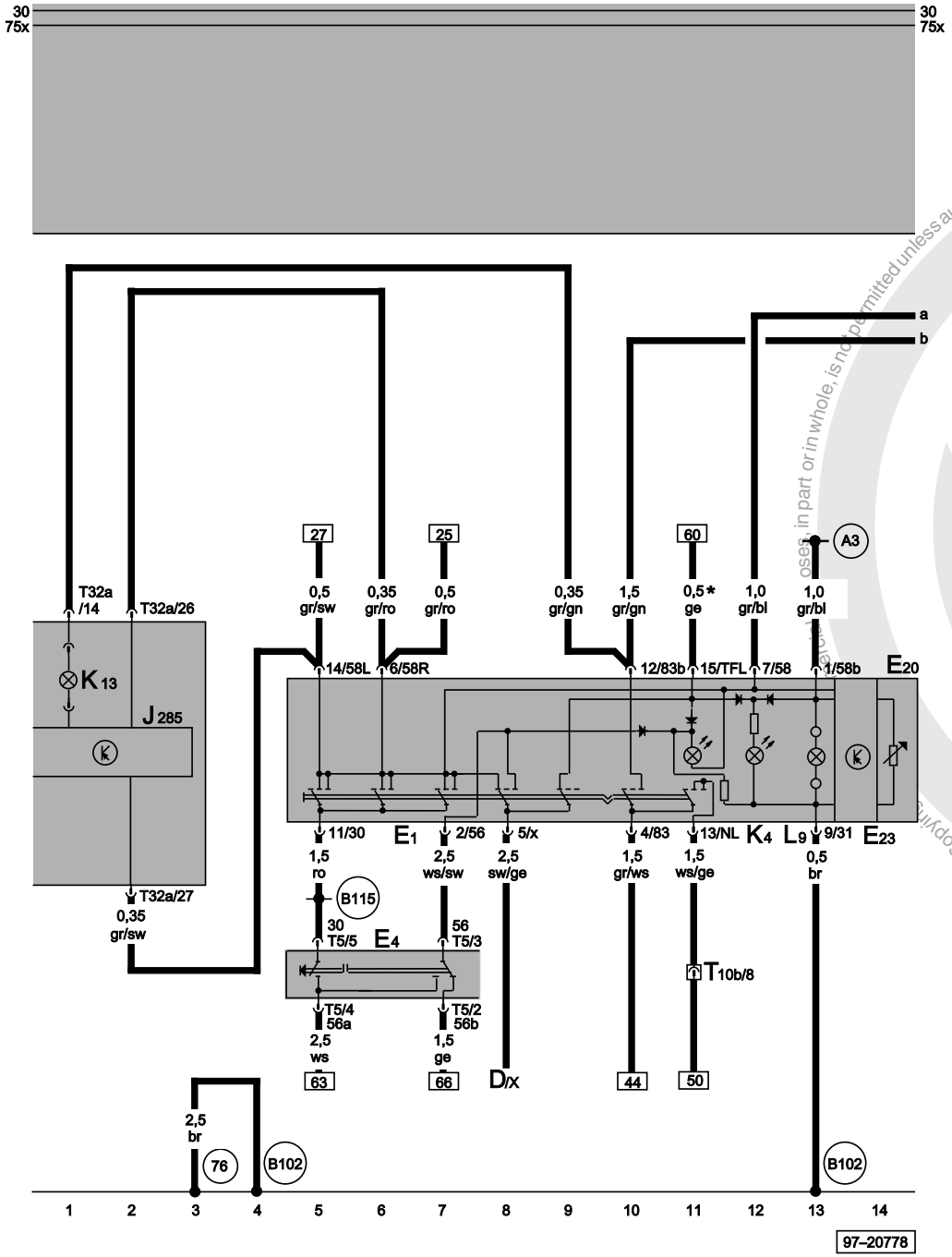

Lighting switch, switches and instruments - lighting control, dash panel insert, rear fog light warning lamp, headlight dipper/flasher switch

D	Ignition/starter switch
E1	Lighting switch
E4	Headlight dipper/flasher switch
E20	Switches and instruments - lighting control
E23	Front and rear fog light switch
J285	Control unit with display in dash panel insert
K4	Side light warning lamp
K13	Rear fog light warning lamp
L9	Lighting switch light bulb
T5	5-pin connector, black, behind steering column switch trim
T10b	10-pin connector, black, near relay station
T32a	32-pin connector, blue, on dash panel insert
76	Earth point, near selector mechanism
A3	Positive (+) connection (58), in dash panel wiring harness
B102	Earth connection, in front left interior wiring harness
B115	Positive connection (30, central electrics), in interior wiring harness
*	Resistance wire

ws	=	white
sw	=	black
ro	=	red
br	=	brown
gn	=	green
bl	=	blue
gr	=	grey
li	=	purple
ge	=	yellow
or	=	orange
rs	=	pink

Protected by copyright. Copyright by Volkswagen AG. Copying in part or in whole, is not permitted unless authorised by Volkswagen AG. Volkswagen AG does not guarantee or assume any liability with respect to the correctness of information in this document.

satelettronica

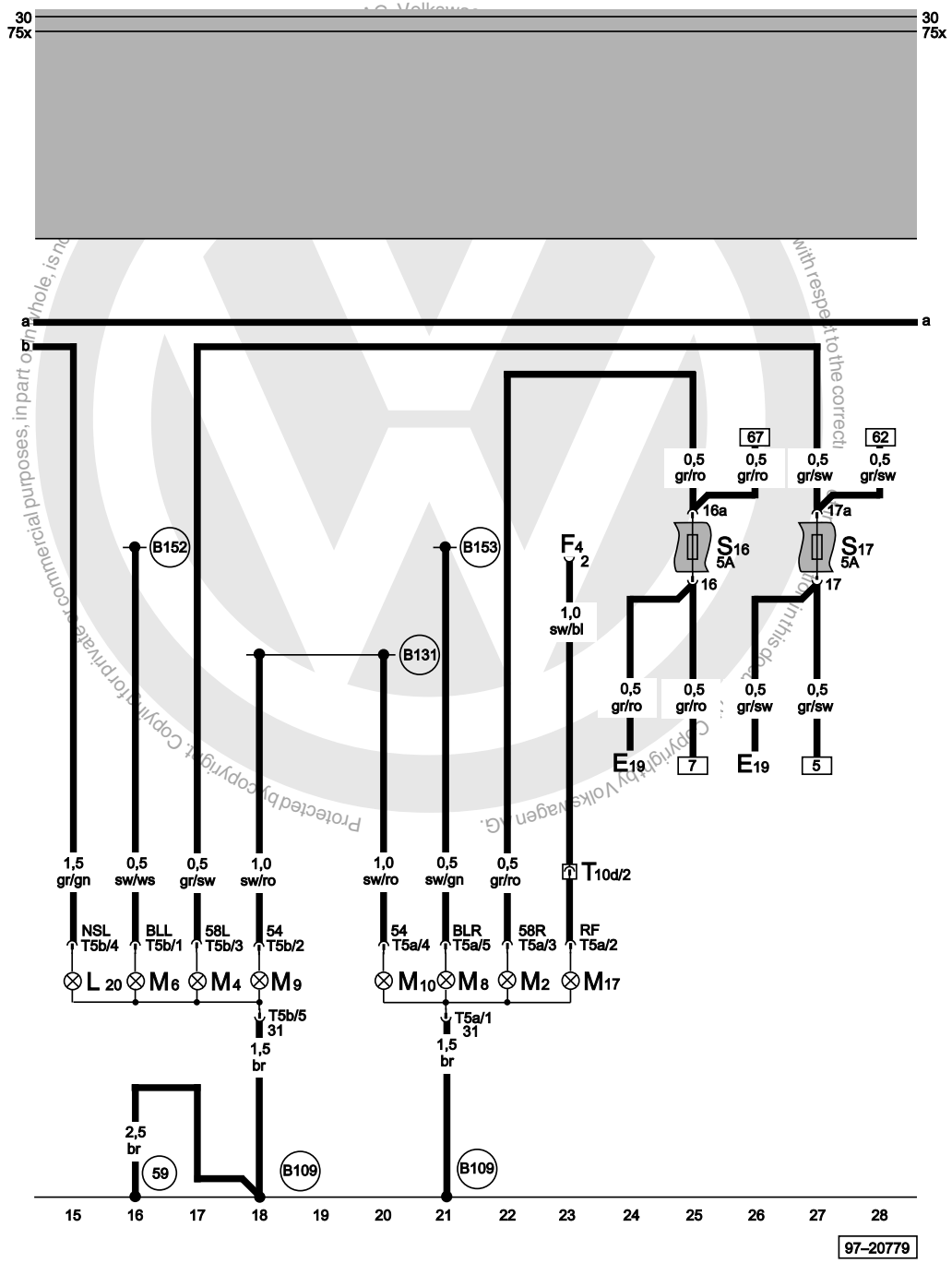

Tail light, brake light, rear fog light, rear turn signal

E19	Parking light switch
F4	Reversing light switch
L20	Rear fogl ight bulb
M2	Tail light bulb, right
M4	Tail light bulb, left
M6	Turn signal bulb, rear left
M8	Turn signal bulb, rear right
M9	Brake light bulb, left
M10	Brake light bulb, right
M17	Reversing light bulb, right
S16	Fuse in relay plate fuse box
S17	Fuse in relay plate fuse box
T5a	5-pin connector, black, right on tail light
T5b	5-pin connector, black, left on tail light
T10d	10-pin connector, red, near relay station
59	Earth point, near left-hand tail light
B109	Earth connection, in rear left interior wiring harness
B131	Connection (54), in interior wiring harness
B152	Connection (BL), in interior wiring harness
B153	Connection (BR), in interior wiring harness

ws	=	white
sw	=	black
ro	=	red
br	=	brown
gn	=	green
bl	=	blue
gr	=	grey
li	=	purple
ge	=	yellow
or	=	orange
rs	=	pink

satelettronica

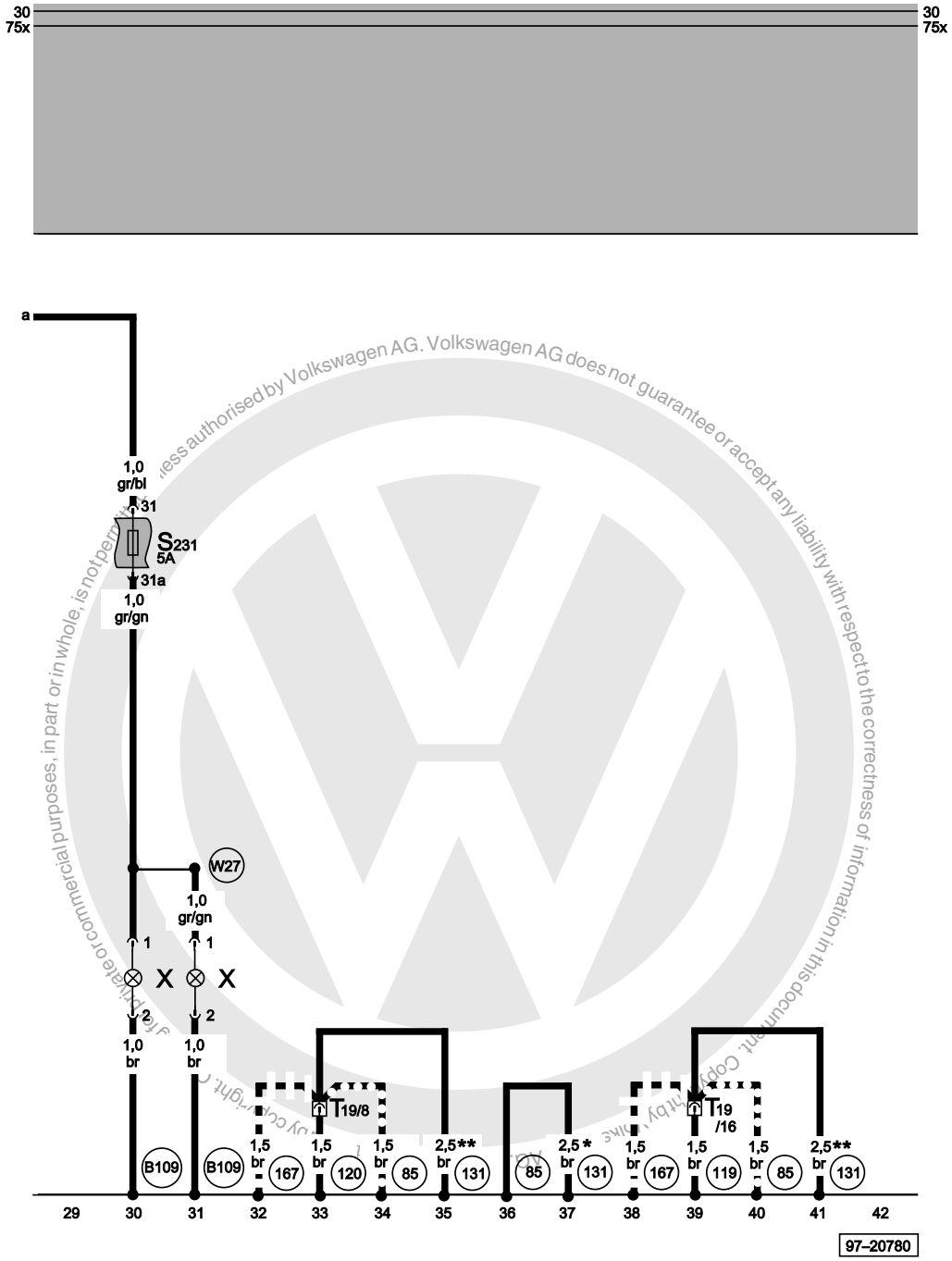

Number plate light

S231	Fuse in fuse holder
T19	19-pin connector, black, front left in engine compartment
X	Number plate light
85	Earth connection -1-, in engine compartment wiring harness
119	Earth connection -1-, in headlight wiring harness
120	Earth connection -2-, in headlight wiring harness
131	Earth connection -3-, in engine compartment wiring harness
167	Earth connection -4-, in engine compartment wiring harness
B109	Earth connection, in rear left interior wiring harness
W27	Positive connection (58), in tail light wiring harness
*	For petrol engine only
**	For diesel engine only
<fo:external-graphic src="/../PDOC/samba/tools/png-convert/out//slp/ft_icons/m_m_m2.png" content-width="20pt" scaling="uniform"/>	For petrol engine with automatic gearbox only
<fo:external-graphic src="/../PDOC/samba/tools/	For petrol engine with manual gearbox only

ws = white

satelettronica

sw	=	black	
ro	=	red	
br	=	brown	
gn	=	green	
bl	=	blue	
gr	=	grey	
li	=	purple	
ge	=	yellow	
or	=	orange	
rs	=	pink	

png-
convert/
out//slp/
ft_icons/
kkk_inv.p
ng"
content-
width="2
0pt"
scaling="
uniform"/
>

Protected by copyright. Copying for private or commercial purposes, in part or in whole, is not permitted unless authorised by Volkswagen AG. Volkswagen AG does not guarantee or accept any liability with respect to the correctness of information in this document. Copyright by Volkswagen AG.

satelettronica

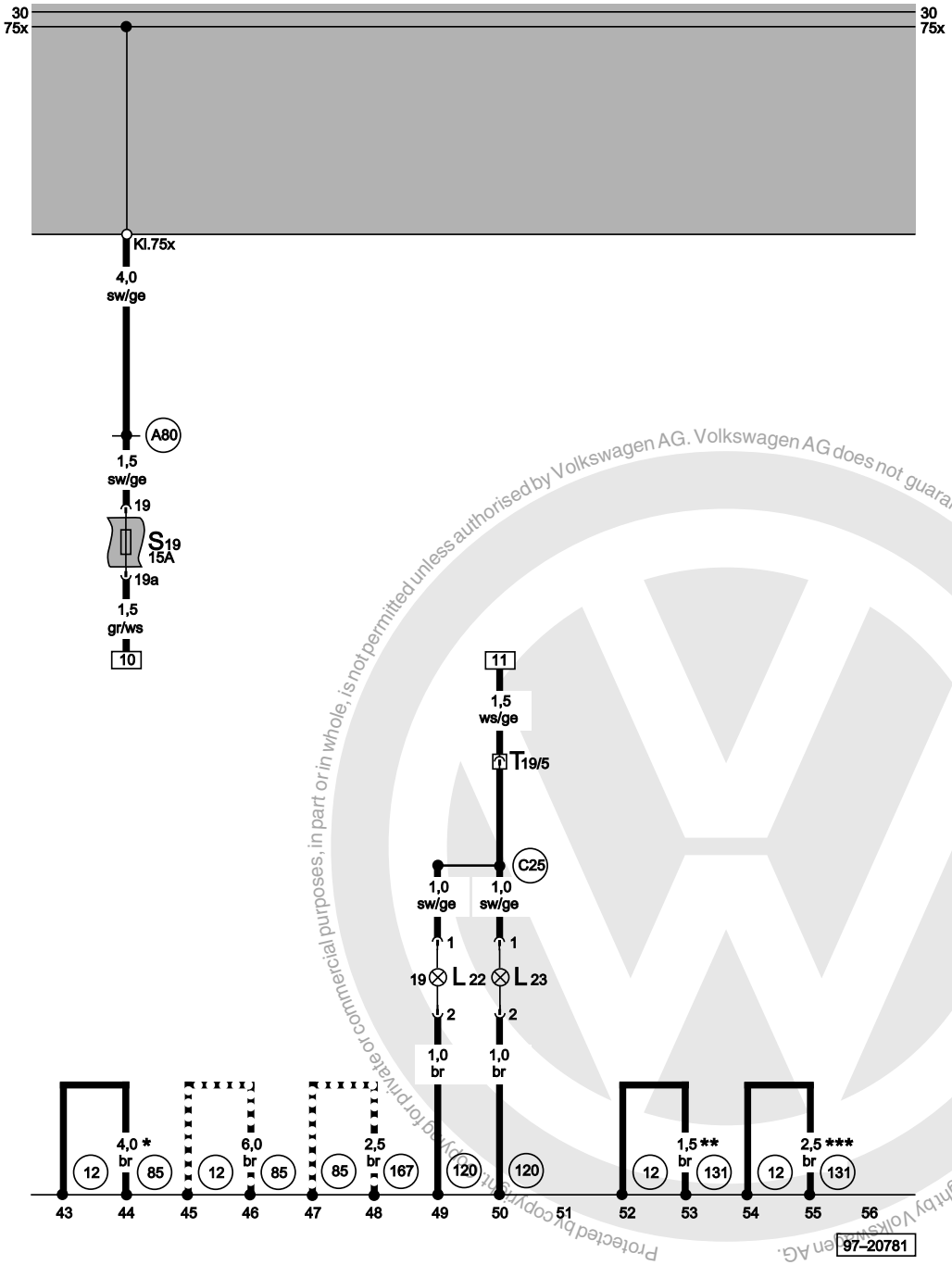

Fog light bulbs

L22	Rear fog light bulb
L23	Rear fog light bulb
S19	Fuse in relay plate fuse box
T19	19-pin connector, black, front left in engine compartment
12	Earth point, in engine compartment, left
85	Earth connection -1-, in engine compartment wiring harness
120	Earth connection -2-, in headlight wiring harness
131	Earth connection -3-, in engine compartment wiring harness
167	Earth connection -4-, in engine compartment wiring harness
A80	Connection -1- (X), in dash panel wiring harness
C25	Connection (fog light), in front lighting wiring harness
*	For petrol engine with manual gearbox only
**	For engine codes AGD and AHG only
***	For engine code AEF only
<fo:external-graphic src="/../PDOC/samba/tools/png-convert/out//slp/ft_icons/kkk_inv.png" content-width="20pt" scaling="uniform"/>	For petrol engine with automatic gearbox only

ws	=	white
sw	=	black
ro	=	red
br	=	brown
gn	=	green
bl	=	blue
gr	=	grey
li	=	purple
ge	=	yellow
or	=	orange
rs	=	pink

Protected by copyright. Copying for private or commercial purposes, in part or in whole, is not permitted unless authorised by Volkswagen AG. Volkswagen AG does not guarantee or accept any liability with respect to the correctness of information in this document. Copyright by Volkswagen AG.

satelettronica

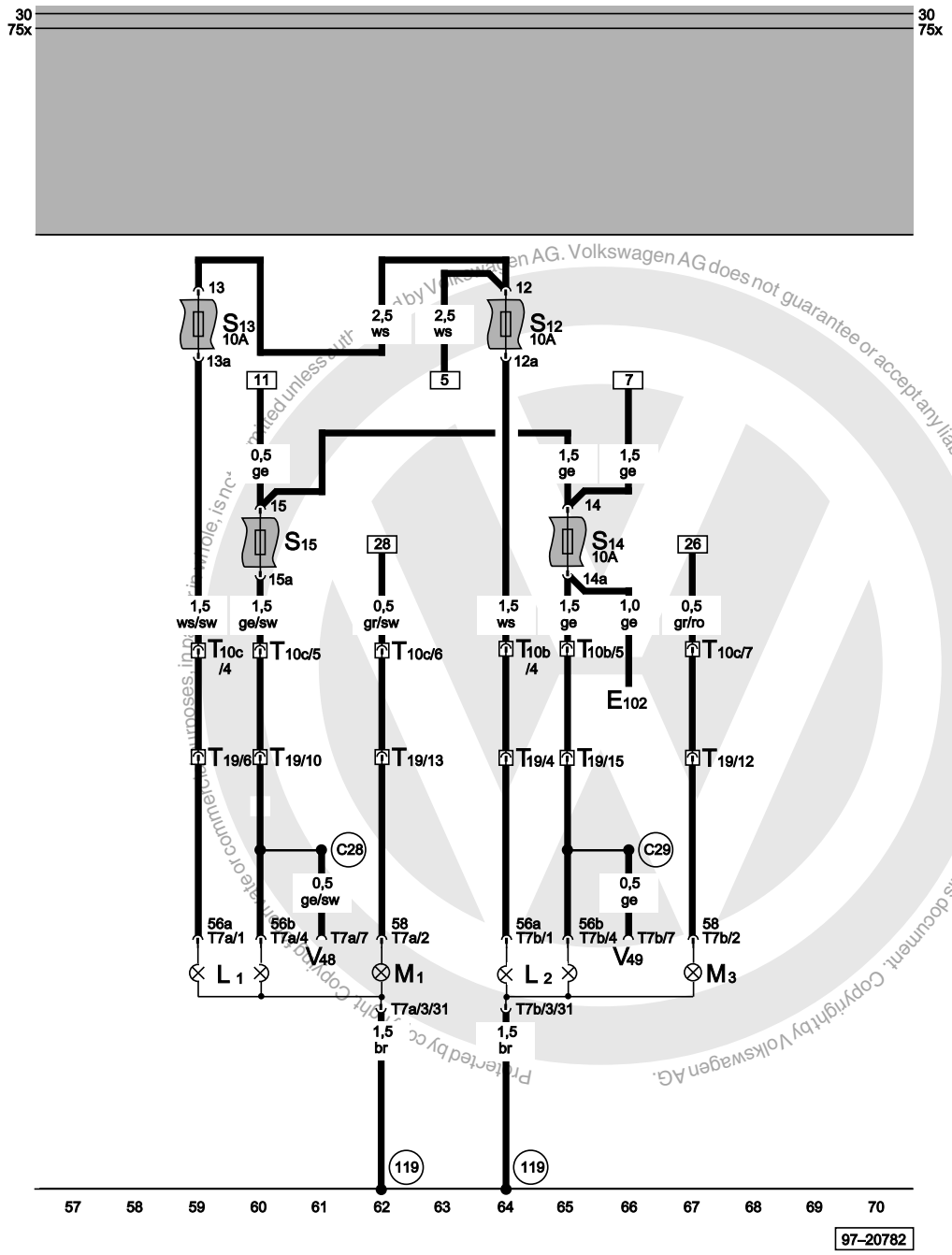

Front bulbs

E102	Headlight range control adjuster
K1	Main beam warning lamp
L1	Twin filament bulb/sealed beam insert, left
L2	Twin filament bulb/sealed beam insert, right
M1	Side light bulb, left
M3	Side light bulb, right
S12	Fuse in relay plate fuse box
S13	Fuse in relay plate fuse box
S14	Fuse in relay plate fuse box
S15	Fuse in relay plate fuse box
T7a	7-pin connector, black, near left headlight
T7b	7-pin connector, black, near right headlight
T10b	10-pin connector, black, near relay station
T10c	10-pin connector, blue, near relay station
T19	19-pin connector, black, front left in engine compartment
V48	Headlight range control motor, left
V49	Headlight range control motor, right
119	Earth connection -1-, in headlight wiring harness
C28	Connection -1- (56b), in headlight wiring harness
C29	Connection -2- (56b), in headlight wiring harness
*	Resistance wire

ws	=	white
sw	=	black
ro	=	red
br	=	brown
gn	=	green
bl	=	blue
gr	=	grey
li	=	purple
ge	=	yellow
or	=	orange
rs	=	pink

satelettronica

Central locking system

From May 1997

For alternatives to relay and fuse positions as well as multi-pin connector wiring - see "Fitting locations" section.

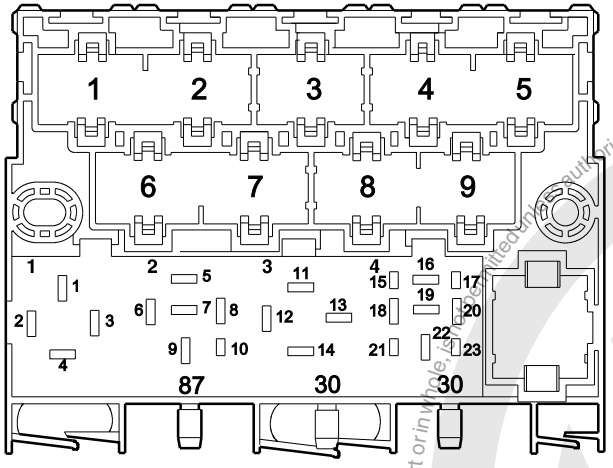

97--20672

Fuse colours

30 A - green
25 A - white
20 A - yellow
15 A - blue
10 A - red
7.5 A - brown
5 A - beige
3 A - lilac

Protected by copyright. Copying for private or commercial purposes, in part or in whole, is not permitted unless authorised by Volkswagen AG. Volkswagen AG does not guarantee or accept any liability with respect to the correctness of information in this document. Copyright by Volkswagen AG.

satelettronica

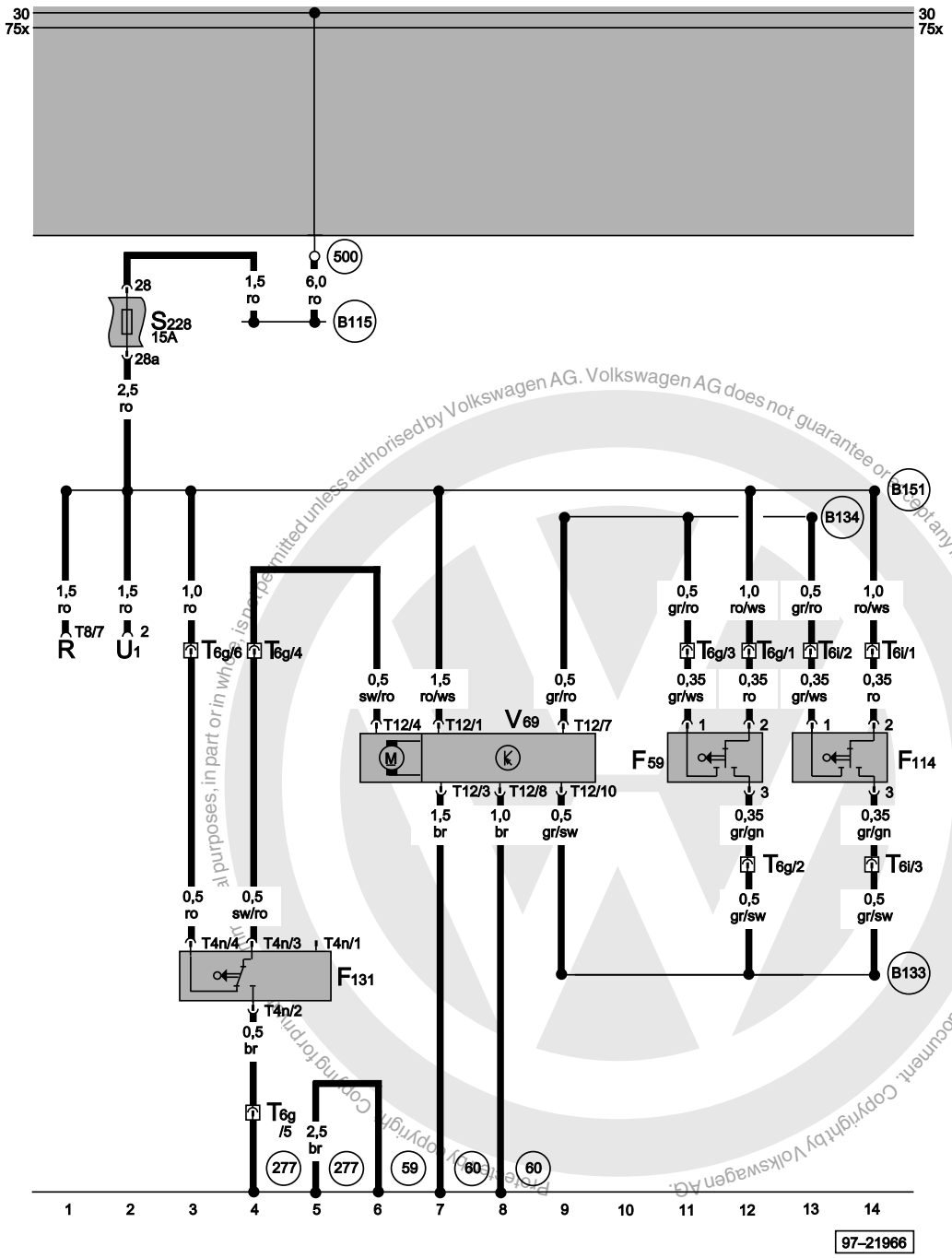

Central locking, heater element for left lock cylinder

F59	Central locking switch (driver's side)
F114	Central locking switch (front passenger's side)
F131	Central locking actuator, front left
S228	Fuse in fuse holder
T4n	4-pin connector, black
T6g	pin connector, black, near left lower A-pillar
T6i	pin connector, black, near right lower A-pillar
T8	8-pin connector, black, on radio
T12	12-pin connector, black
R	Radio
U1	Cigarette lighter
Z22	Heater element, left lock cylinder
V69	Central locking pump with control unit
59	Earth point, near left-hand tail light
60	Earth point -2-, near right tail light
277	Earth connection -3-, in interior wiring harness
500	Screw connection -1- (30), on relay plate
B115	Positive connection (30, central electrics), in interior wiring harness
B133	Connection (central locking open), in interior wiring harness
B134	Connection (central locking closed), in interior wiring harness
B151	Positive connection -3- (30a), in interior wiring harness

ws	=	white
sw	=	black
ro	=	red
br	=	brown
gn	=	green
bl	=	blue
gr	=	grey
li	=	purple
ge	=	yellow
or	=	orange
rs	=	pink

Reproduction of copyright. Copyright by Volkswagen AG. Copying for private and commercial purposes, in part or in whole, is not permitted unless authorised by Volkswagen AG. Volkswagen AG does not guarantee or accept any liability with respect to the correctness of information in this document.

satelettronica

1.9 l/47 kW - diesel engine, engine code AGD
From May 1996

1.7 l/42 kW - diesel engine, engine code AHG
From May 1996

1.7 l/44 kW - diesel engine, engine code AKU
from September 1997

Notes:
For information concerning
- Relay and fuse assignment
- Multi-pin connectors
- Control units and relays
- Earth connections

⇒ Overview of Fitting Locations!
For information concerning
- Fault Finding Programs

⇒ Guided Fault Finding

Protected by copyright. Copying for private or commercial purposes, in part or in whole, is not permitted unless authorised by Volkswagen AG. Volkswagen AG does not guarantee or accept any liability with respect to the correctness of information in this document. Copyright by Volkswagen AG.

satelettronica

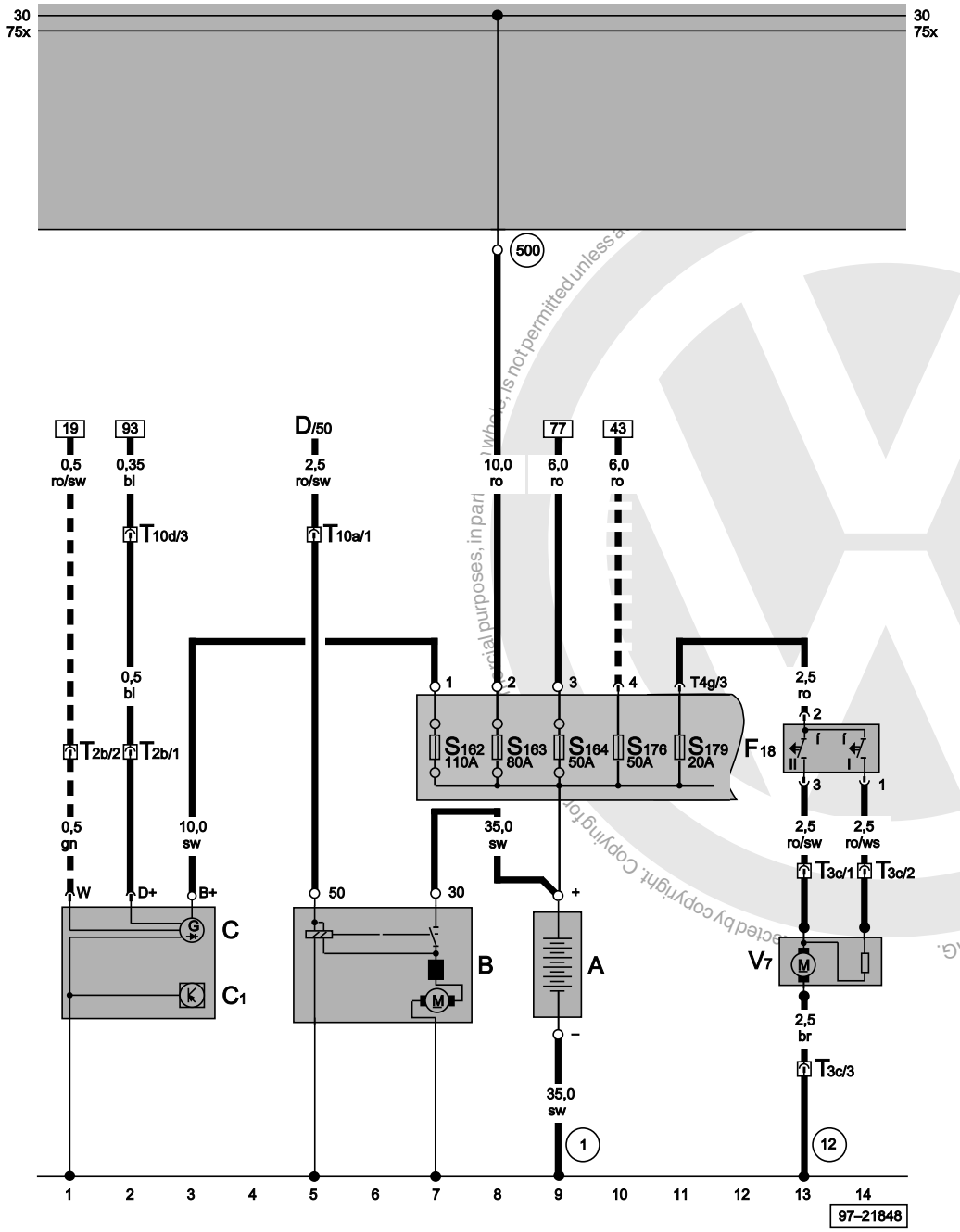

Battery, starter, alternator, radiator fan

A	Battery
B	Starter
C	Alternator
C1	Voltage regulator
D	Ignition/starter switch
F18	Thermal switch for radiator fan
S162	Fuse 1 (30), on battery fuse holder
S163	Fuse 2 (30), on battery fuse holder
S164	Fuse 2 (30), on battery fuse holder
S176	Fuse 4 (30), on battery fuse holder
S179	Fuse 7 (30), on battery fuse holder
T2b	2-pin connector, black, near starter
T3c	3-pin connector, black, on radiator fan
T4g	4-pin connector, black, near battery
T10a	10-pin connector, green, near relay station
T10d	10-pin connector, red, near relay station
V7	Radiator fan
(1)	Earth strap, battery - body
(12)	Earth point, on left in engine compartment
(500)	Screw connection 1 (30), on relay plate
	Only models with coolant heater element

ws	=	white
sw	=	black
ro	=	red
br	=	brown
gn	=	green
bl	=	blue
gr	=	grey
li	=	purple
ge	=	yellow
or	=	orange
rs	=	pink

AG does not guarantee or accept any liability with respect to the correctness of information in this document. Copyright by Volkswagen AG.
Copyrighted by copyright. Copying for private or commercial purposes, in part or in whole, is not permitted unless authorized by AG.
satelettronica

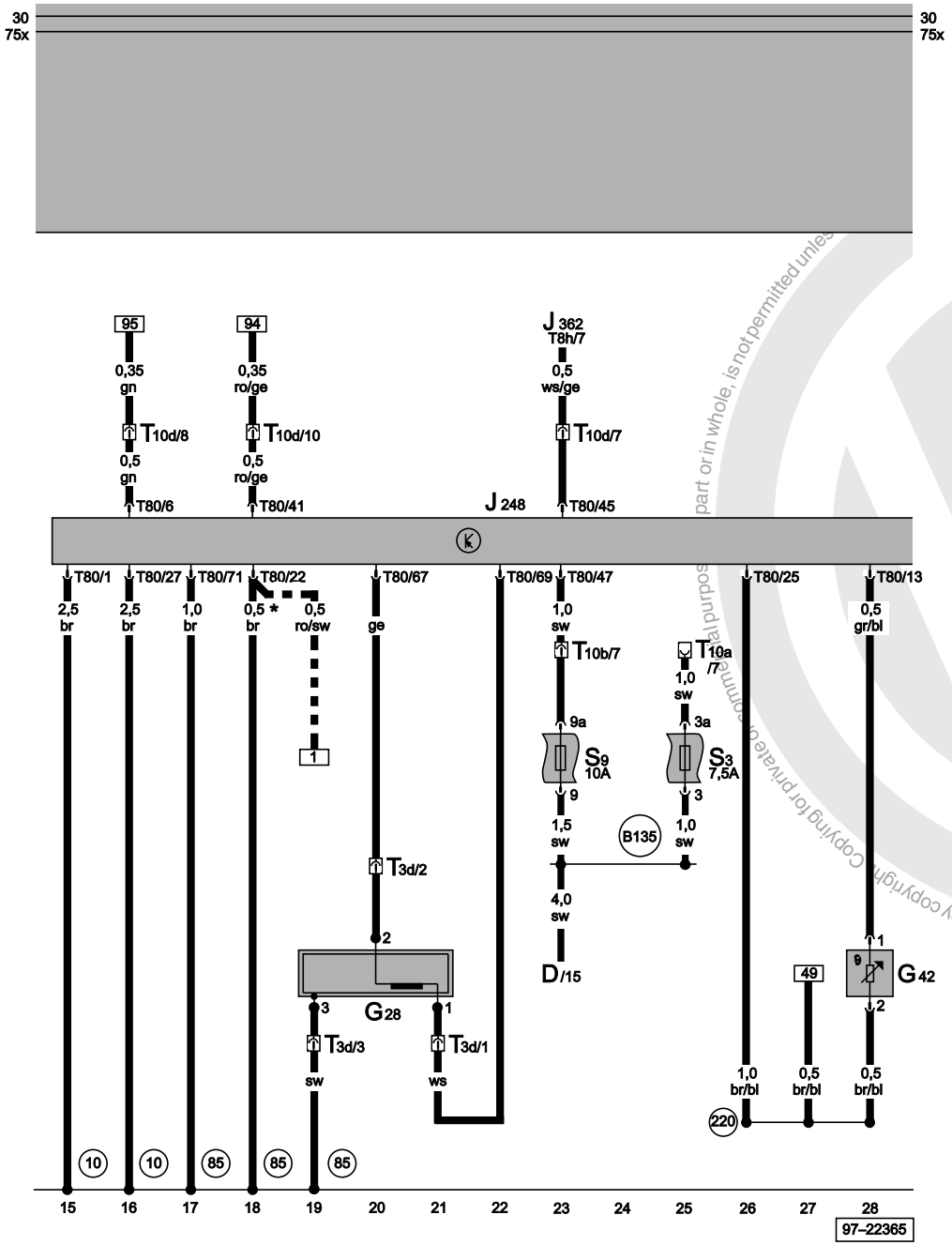

Diesel direct injection system control unit, engine speed sender, intake air temperature sender

D	Ignition/starter switch
G28	Engine speed sender (00513)
G42	Intake air temperature sender (00523)
J248	Diesel direct injection system control unit, on right in plenum chamber
J362	Immobilizer control unit, next to steering column
S3	Fuse on fuse holder
S9	Fuse on fuse holder
T3d	3-pin connector, black, on left on cylinder head
T8h	8-pin connector, black, on immobilizer control unit
T10a	10-pin connector, green, near relay station
T10b	10-pin connector, black, near relay station
T10d	10-pin connector, red, near relay station
T80	80-pin connector, black
(10)	Earth point, in plenum chamber
(85)	Earth connection 1, in engine compartment wiring harness
(220)	Earth connection (sender earth), in engine wiring harness
(B135)	Connection (15a), in interior wiring harness
<fo:external-graphic src="/../PDOC/samba/tools/png-convert/out//slp/ft_icons/m_m_m3.png" content-width="20pt" scaling="uniform"/>	Only models with coolant heater element
*	Not with coolant heater element

ws	=	white
sw	=	black
ro	=	red
br	=	brown
gn	=	green
bl	=	blue
gr	=	grey
li	=	purple
ge	=	yellow
or	=	orange
rs	=	pink

Protected by copyright. Copying for private or commercial purposes, in part or in whole, is not permitted unless authorised by Volkswagen AG. Volkswagen AG does not guarantee or accept any liability with respect to the correctness of information in this document. Copyright by Volkswagen AG.
satelettronica

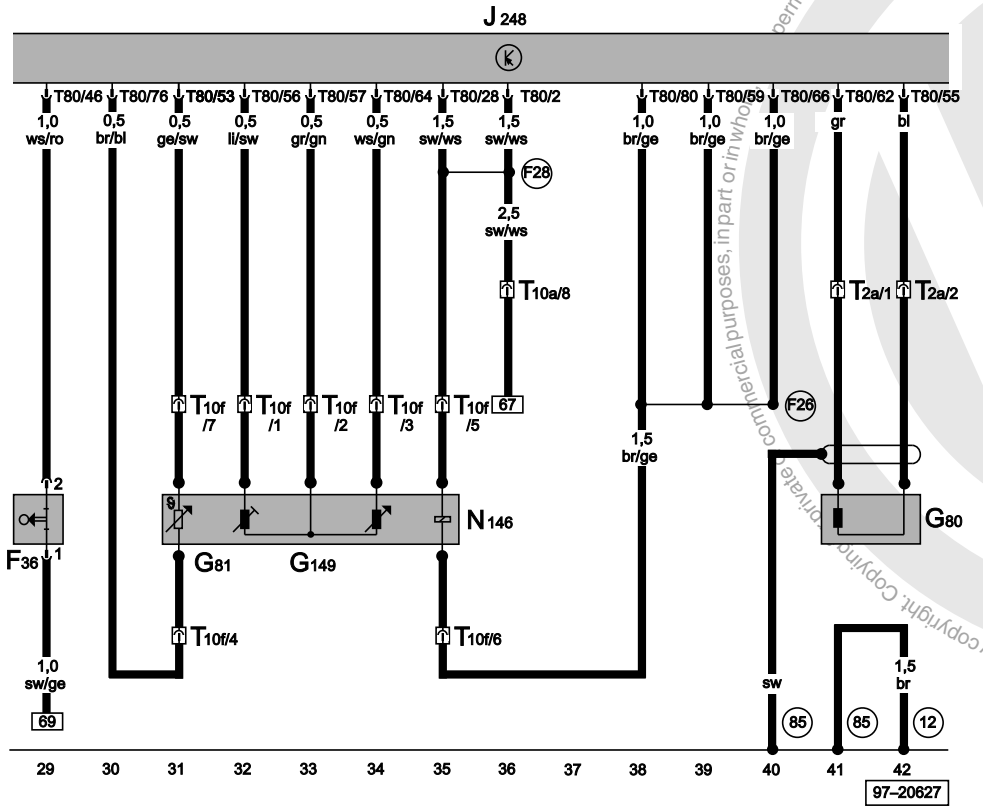

Diesel direct injection system control unit, metering adjuster, needle lift sender, fuel temperature sender, modulating piston movement sender

F36	Clutch pedal switch (00650)
G80	Needle lift sender (00542)
G81	Fuel temperature sender (00539)
G149	Modulating piston movement sender (00765)
J248	Diesel direct injection system control unit, on right in plenum chamber
N146	Metering adjuster (01268)
T2a	2-pin connector, brown, on left on cylinder head near injector pump
T10a	10-pin connector, green, near relay station
T10f	10-pin connector, black, on injection pump
T80	80-pin connector, black
12	Earth point, on left in engine compartment
85	Earth connection 1, in engine compartment wiring harness
F26	Connection 2, in diesel direct injection system wiring harness
F28	Connection 3, in diesel direct injection system wiring harness

ws	=	white
sw	=	black
ro	=	red
br	=	brown
gn	=	green
bl	=	blue
gr	=	grey
li	=	purple
ge	=	yellow
or	=	orange
rs	=	pink

Protected by copyright. Copyright by Volkswagen AG. Copying for private or commercial purposes, in part or in whole, is not permitted unless authorised by Volkswagen AG. Volkswagen AG does not guarantee or accept any liability with respect to the correctness of information in this document.
satelettronica

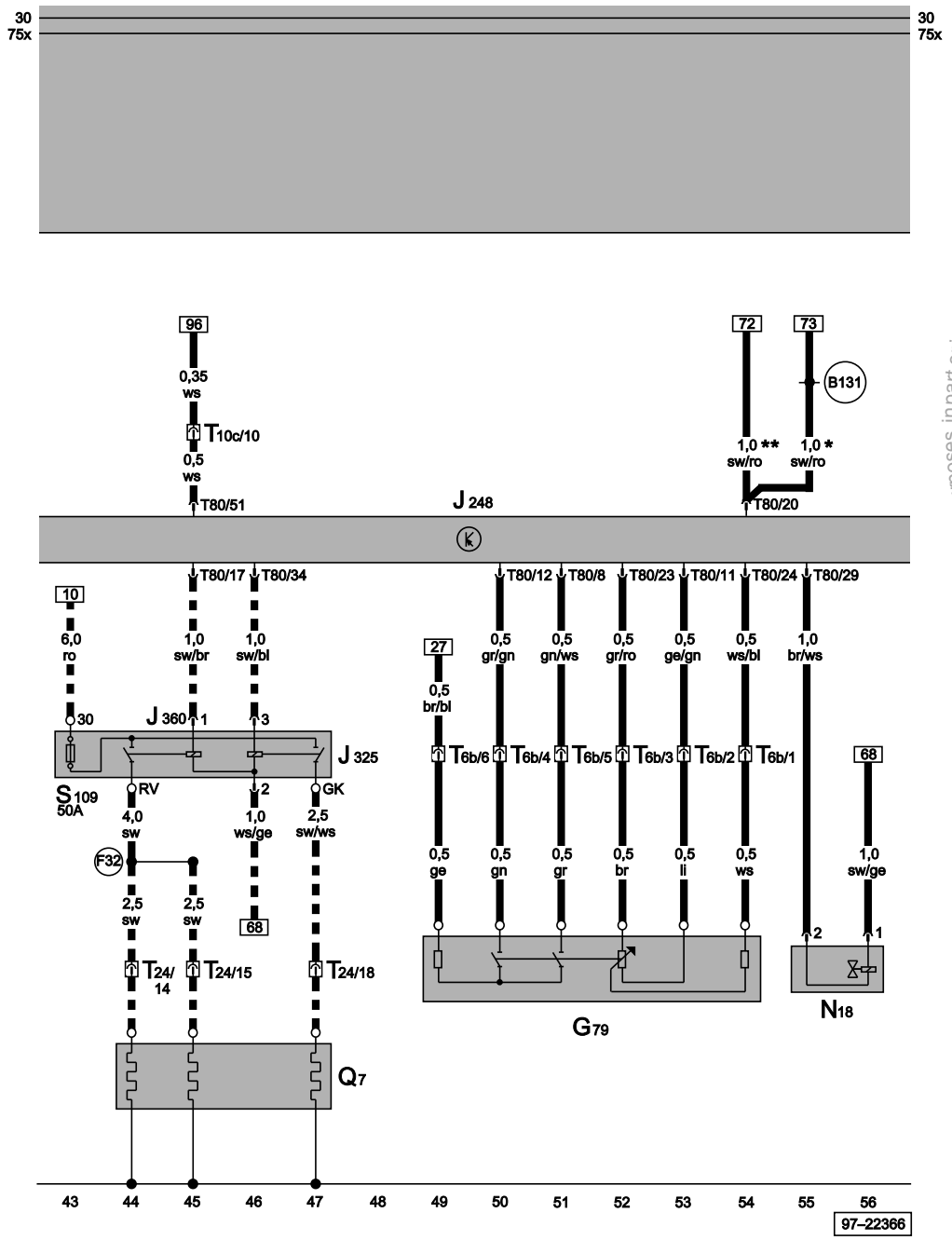

Diesel direct injection system control unit, accelerator position sender, coolant heater element relay, coolant heater element, exhaust gas recirculation valve

G79	Accelerator position sender (00777)
J248	Diesel direct injection system control unit, on right in plenum chamber
J325	Coolant heater element relay, on coolant circuit (01160)
J360	High heat output relay, on centre of bulkhead (01194)
N18	Exhaust gas recirculation valve (01265)
Q7	Glow plugs, coolant
S109	Glow plug fuse - (coolant)
T6b	6-pin connector, black, behind relay plate
T10c	10-pin connector, blue, near relay station
T24	24-pin connector, black, on engine
T80	80-pin connector, black
B131	Connection (54), in interior wiring harness
F32	Connection (glow plugs, coolant) in diesel direct injection system wiring harness
<fo:external-graphic src="/../PDOC/samba/tools/png-convert/out//slp/ft_icons/m_m_m3.png" content-width="20pt" scaling="uniform"/>	Only models with coolant heater element
*	Only models with ABS with EDL
**	Not models with ABS with EDL

ws	=	white
sw	=	black
ro	=	red
br	=	brown
gn	=	green
bl	=	blue
gr	=	grey
li	=	purple
ge	=	yellow
or	=	orange
rs	=	pink

satelettronica

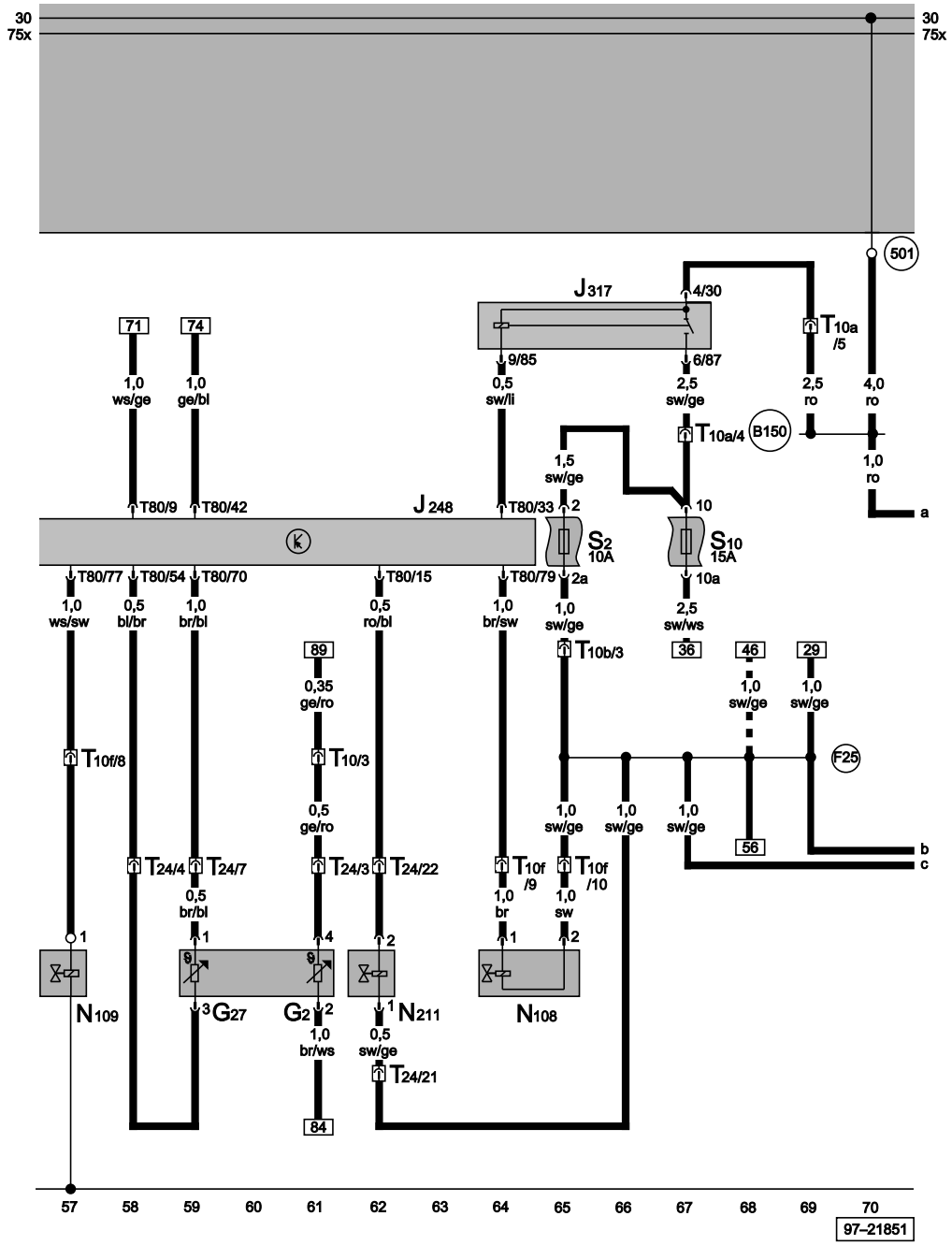

Diesel direct injection system control unit, engine temperature sender, coolant temperature sender, fuel shut-off valve, terminal 30 voltage supply relay, commencement of injection valve, throttle valve module valve

G2	Coolant temperature sender
G27	Engine temperature sender (01204)
J248	Diesel direct injection system control unit, on right in plenum chamber
J317	Terminal 30 voltage supply relay, on relay carrier (01054)
N108	Commencement of injection valve (01269)
N109	Fuel switch-off valve (01237)
N211	Throttle butterfly valve
S2	Fuses on fuse holder
S10	Fuses on fuse holder
T10	10-pin connector, white, near relay station
T10a	10-pin connector, green, near relay station
T10b	10-pin connector, black, near relay station
T10f	10-pin connector, black, on injection pump
T24	24-pin connector, black, on engine
T80	80-pin connector, black
501	Screw connection 2 (30), on relay plate
B150	Positive connection 2 (30a), in interior wiring harness
F25	Connection 1, in diesel direct injection system wiring harness
<fo:external-graphic src="/../PDOC/samba/tools/png-convert/outl/slp/ft_icons/m_m_m3.png" content-width="20pt" scaling="uniform"/>	Only models with coolant heater element

ws	=	white
sw	=	black
ro	=	red
br	=	brown
gn	=	green
bl	=	blue
gr	=	grey
li	=	purple
ge	=	yellow
or	=	orange
rs	=	pink

Protected by copyright. Copying for private or commercial purposes, in part or in whole, is not permitted unless authorised by Volkswagen AG. Volkswagen AG does not guarantee or accept any liability with respect to the correctness of information in this document. Copyright by Volkswagen AG.
satelettronica

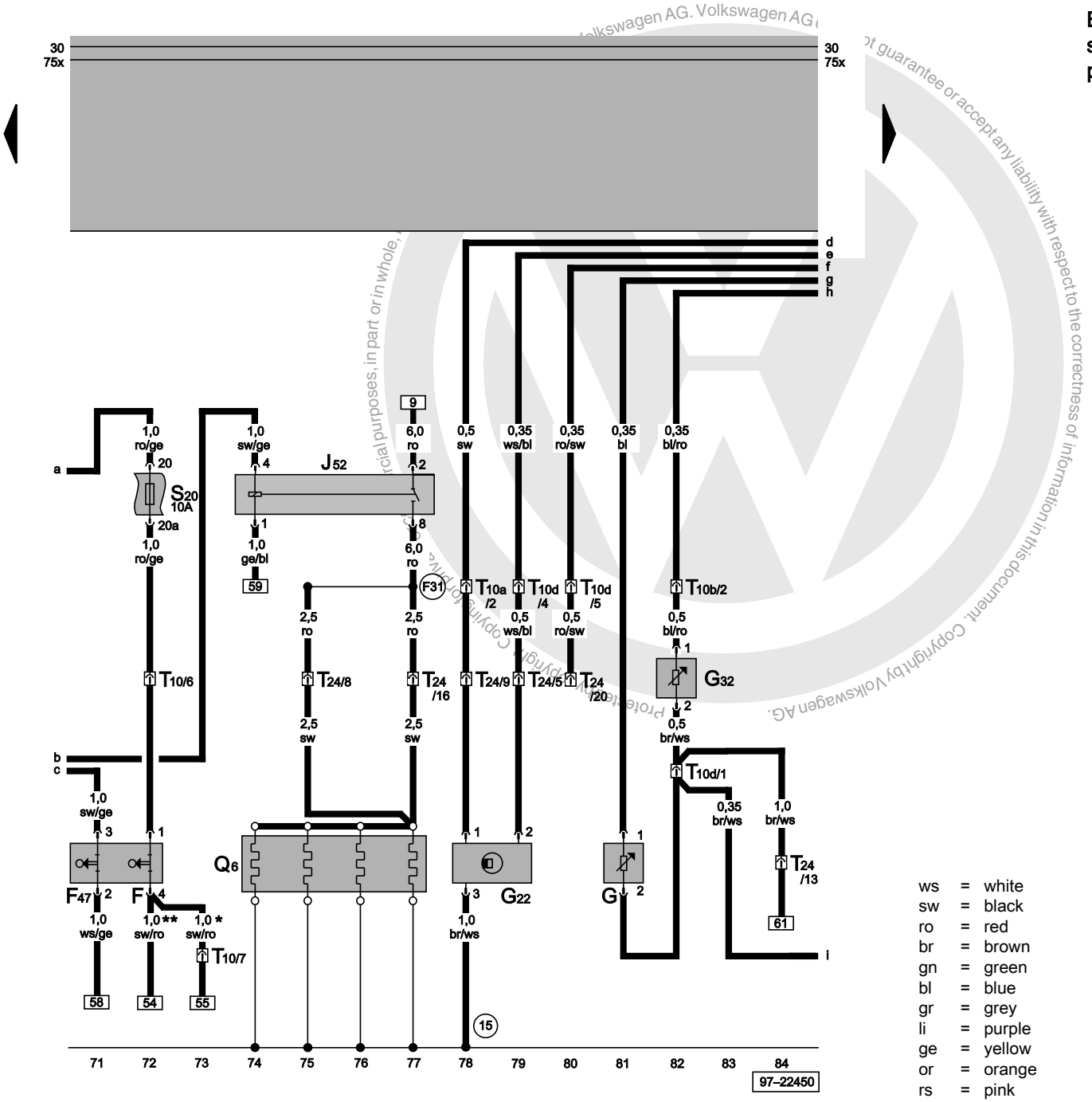

Brake light switch, speedometer sender, fuel gauge sender, coolant shortage indicator sender, engine glow plugs

F	Brake light switch (00526)
F47	Cruise control system brake pedal switch/diesel direct injection system (00629)
G	Fuel gauge sender
G22	Speedometer sender (Hall sender on gearbox)
G32	Coolant shortage indicator sender
J52	Glow plug relay (01266)
Q6	Engine glow plugs
S20	Fuses on fuse holder
T10	10-pin connector, white, near relay station
T10a	10-pin connector, green, near relay station
T10b	10-pin connector, black, near relay station
T10d	10-pin connector, red, near relay station
T24	24-pin connector, black, on engine
15	Earth point, on cylinder head
F31	Connection (engine glow plugs), in diesel direct injection system wiring harness
*	Only models with ABS with EDL
**	Not models with ABS with EDL

ws	=	white
sw	=	black
ro	=	red
br	=	brown
gn	=	green
bl	=	blue
gr	=	grey
li	=	purple
ge	=	yellow
or	=	orange
rs	=	pink

satelettronica

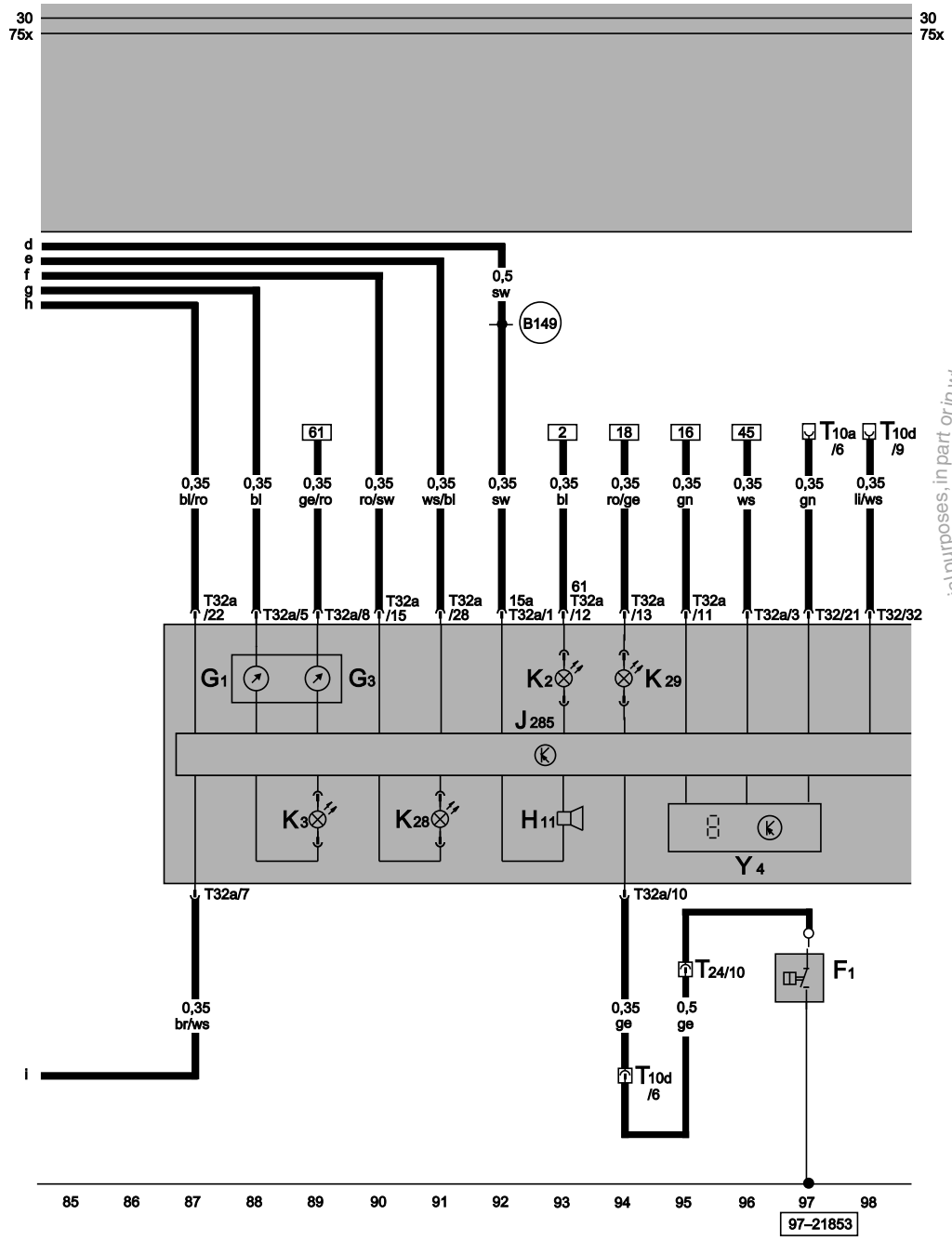

Dash panel insert, fuel gauge, coolant shortage and coolant temperature indicator, optical and acoustic oil pressure warning, odometer

F1	Oil pressure switch
G1	Fuel gauge
G3	Coolant temperature gauge
H11	Oil pressure warning buzzer
J285	Control unit with display in dash panel insert
K2	Alternator warning lamp
K3	Oil pressure warning lamp
K28	Coolant temperature/coolant shortage warning lamp
K29	Glow period warning lamp (00626)
T10a	10-pin connector, green, near relay station
T10d	10-pin connector, red, near relay station
T24	24-pin connector, black, on engine
T32	32-pin connector, black, on dash panel insert
T32a	32-pin connector, blue, on dash panel insert
Y4	Trip counter
B149	Positive connection 2 (15a), in interior wiring harness

ws	=	white
sw	=	black
ro	=	red
br	=	brown
gn	=	green
bl	=	blue
gr	=	grey
li	=	purple
ge	=	yellow
or	=	orange
rs	=	pink

Protected by copyright. Copying for private or commercial purposes, in part or in whole, is not permitted unless authorised by Volkswagen AG. Volkswagen AG does not guarantee or accept any liability with respect to the correctness of information in this document. Copyright by Volkswagen AG.
satelettronica

Basic equipment

from September 1997

Notes:

For information concerning

- Relay and fuse assignment
- Multi-pin connectors
- Control units and relays
- Earth connections

⇒ Overview of Fitting Locations!

For information concerning

- Fault Finding Programs

⇒ Guided Fault Finding

Protected by copyright. Copying for private or commercial purposes, in part or in whole, is not permitted unless authorised by Volkswagen AG. Volkswagen AG does not guarantee or accept any liability with respect to the correctness of information in this document. Copyright by Volkswagen AG.

satelettronica

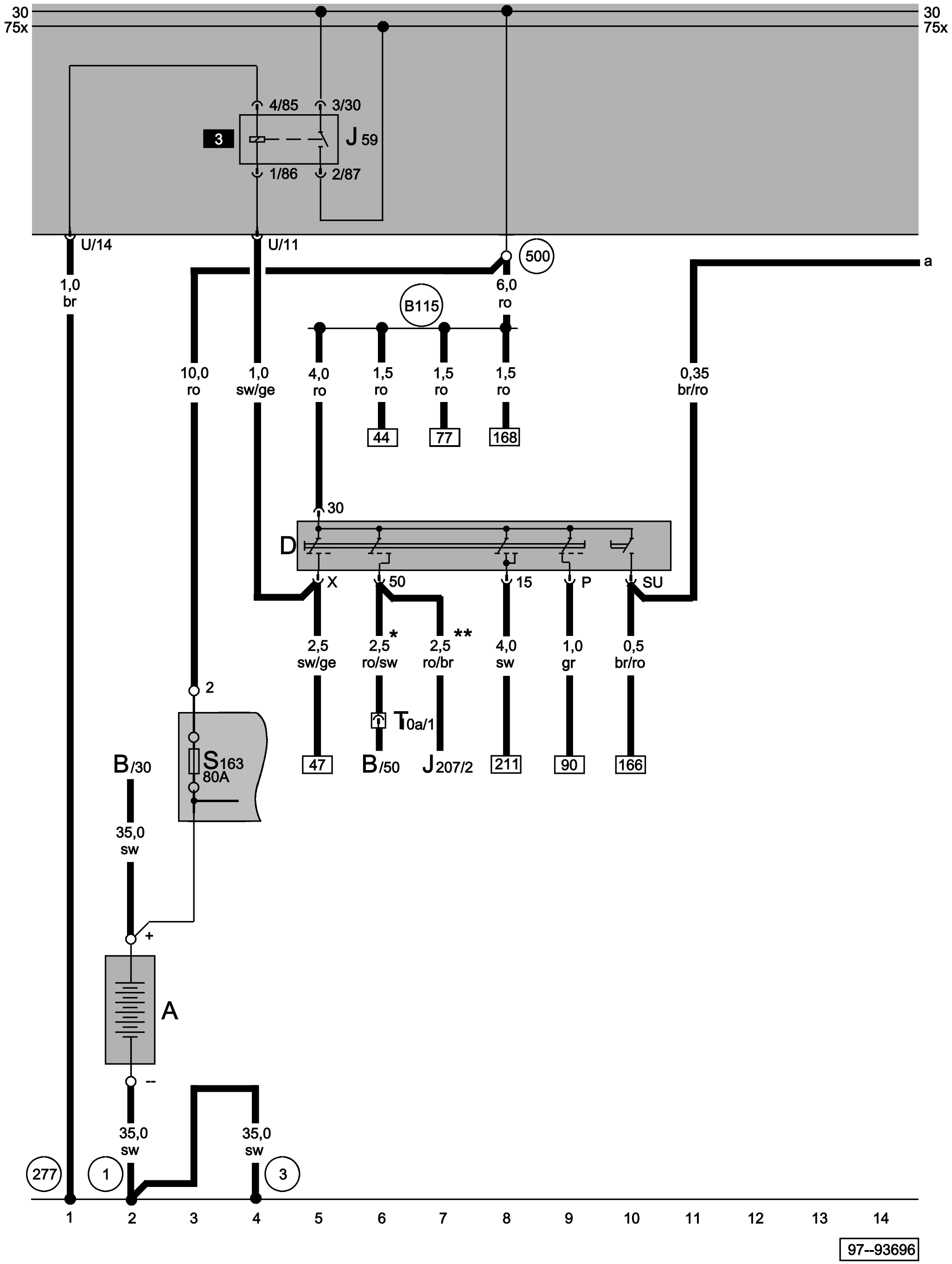

Battery, ignition/starter switch, X-contact relief relay

A	Battery
B	Starter
D	Ignition/starter switch
J59	X-contact relief relay
J207	Starter inhibitor relay, next to relay plate
S163	Fuse 2 (30), on battery fuse holder
T10a	10-pin connector, green, near relay station
1	Earth strap, battery - body
3	Earth strap, engine - body
277	Earth connection 3, in interior wiring harness
500	Screw connection 1 (30), on relay plate
B115	Positive connection, (30, central electrics), in interior wiring harness
*	Not with automatic gearbox
**	With automatic gearbox

ws = white
sw = black
ro = red
br = brown
gn = green
bl = blue
gr = grey
li = purple
ge = yellow
or = orange
rs = pink

Protected by copyright. Copying for private or commercial purposes, in part or in whole, is not permitted unless authorised by Volkswagen AG. Volkswagen AG does not guarantee or accept any liability with respect to the correctness of information in this document. Copyright by Volkswagen AG.
satelettronica

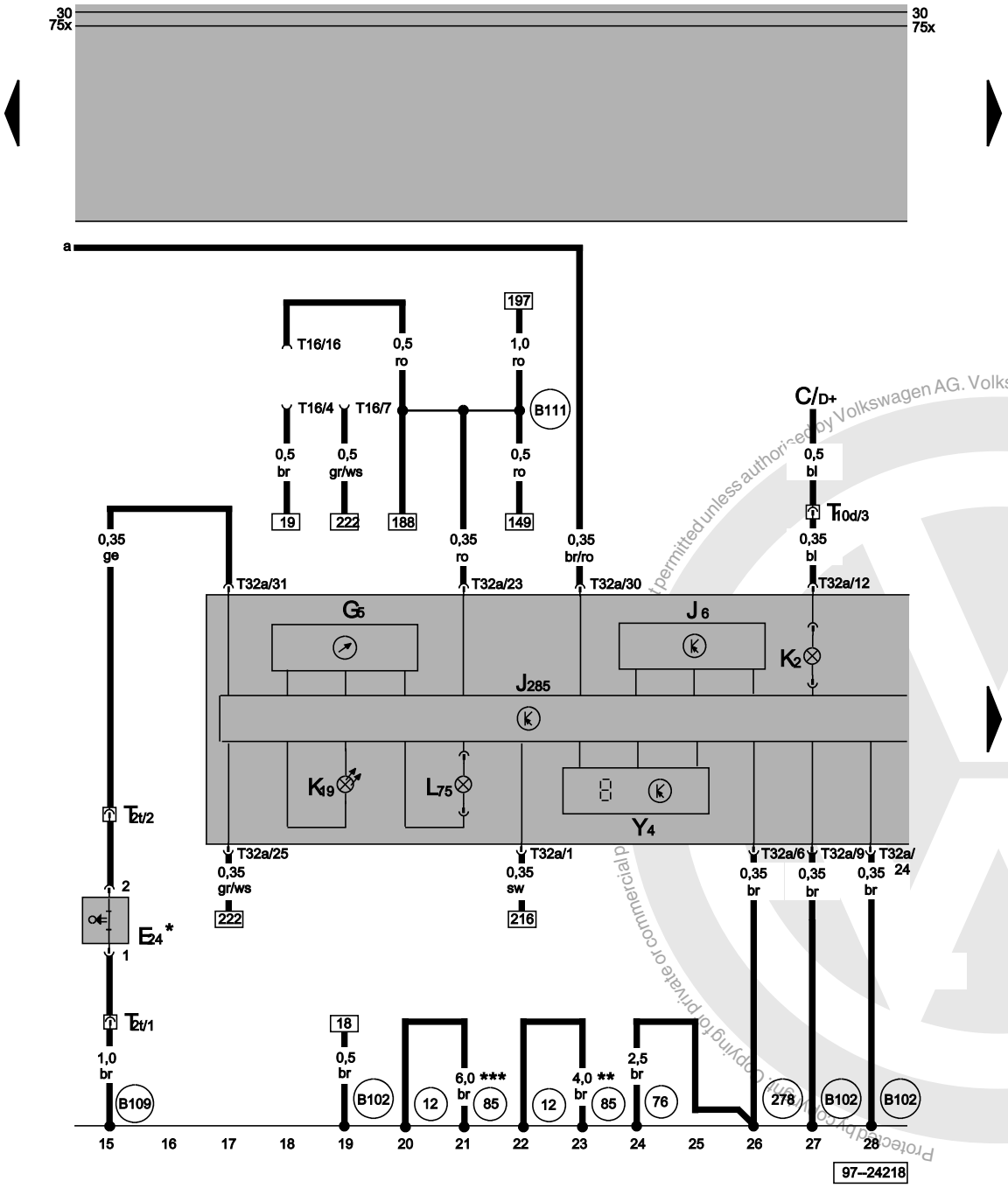

Dash panel insert, rev. counter, self-diagnosis connection, odometer, seat belt warning system

C	Alternator
E24	Driver side belt switch
G5	Rev. counter (00662)
J6	Voltage stabiliser
J285	Control unit with display in dash panel insert (01317)
K2	Alternator warning lamp
K19	Seat belt warning system warning lamp
L75	Digital display illumination bulb
T2t	2-pin connector, under driver seat
T10d	10-pin connector, red, relay station
T16	16-pin connector, self-diagnosis connection, on right in glove compartment
T32a	32-pin connector, blue, on dash panel insert
Y4	Trip counter
12	Earth point, on left in engine compartment
76	Earth point, near selector mechanism
85	Earth connection 1, in engine compartment wiring harness
278	Earth connection 4, in interior wiring harness
B102	Earth connection, in front left interior wiring harness
B109	Earth connection, in rear left interior wiring harness
B111	Positive connection 1 (30a), in interior wiring harness
*	Not with all levels of equipment
**	Only petrol engine models with manual gearbox
***	Only petrol engine models with automatic gearbox

ws	=	white
sw	=	black
ro	=	red
br	=	brown
gn	=	green
bl	=	blue
gr	=	grey
li	=	purple
ge	=	yellow
or	=	orange
rs	=	pink

Protected by copyright. Copying for private or commercial purposes, in part or in whole, is not permitted unless authorised by Volkswagen AG. Volkswagen AG does not guarantee or accept any liability with respect to the correctness of information in this document. Copyright by Volkswagen AG.

satelettronica

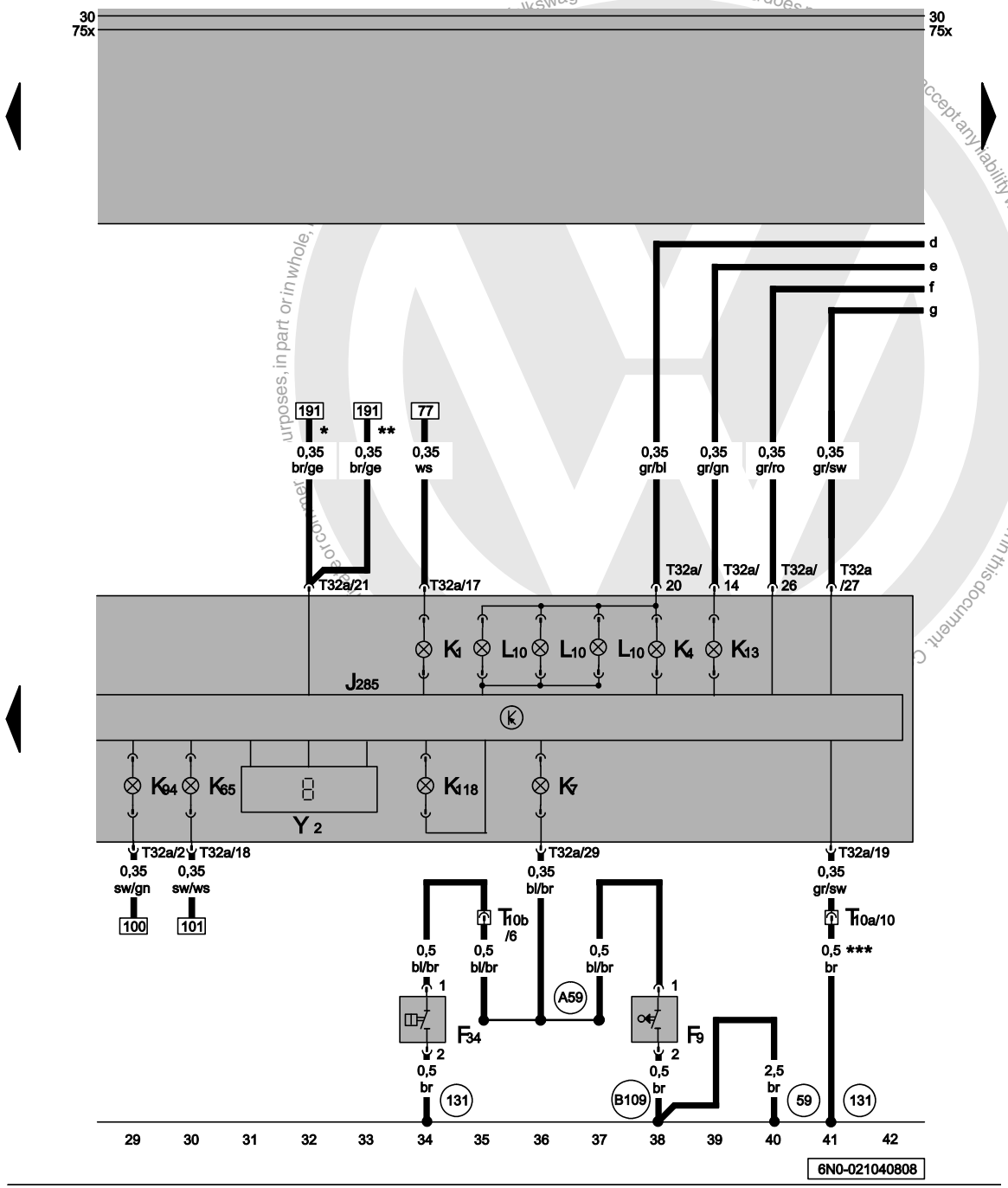

Dash panel insert, digital clock, main beam warning lamp, side light warning lamp, turn signal indicator lamp, handbrake warning, brake fluid level warning contact

F9	Handbrake warning switch (01114)
F34	Brake fluid level warning contact
J285	Control unit with display in dash panel insert (01317)
K1	Main beam warning lamp
K4	Side light warning lamp
K7	Dual circuit brakes/handbrake warning lamp (01047)
K13	Rear fog light warning lamp
K65	Left turn signal warning lamp
K94	Right turn signal warning lamp
K118	Brake system warning lamp
L10	Dash panel insert illumination bulb
T10a	10-pin connector, green, near relay station
T10b	10-pin connector, black, near relay station
T32a	32-pin connector, blue, on dash panel insert
Y2	Digital clock
59	Earth point, near left tail light
131	Earth connection 2, in engine compartment wiring harness
B109	Earth connection, in rear left interior wiring harness
A59	Connection (sender), in dash panel wiring harness
*	Only models with a petrol engine
**	Only models with a diesel engine
***	Not for ABS

ws	=	white
sw	=	black
ro	=	red
br	=	brown
gn	=	green
bl	=	blue
gr	=	grey
li	=	purple
ge	=	yellow
or	=	orange
rs	=	pink

satelettronica

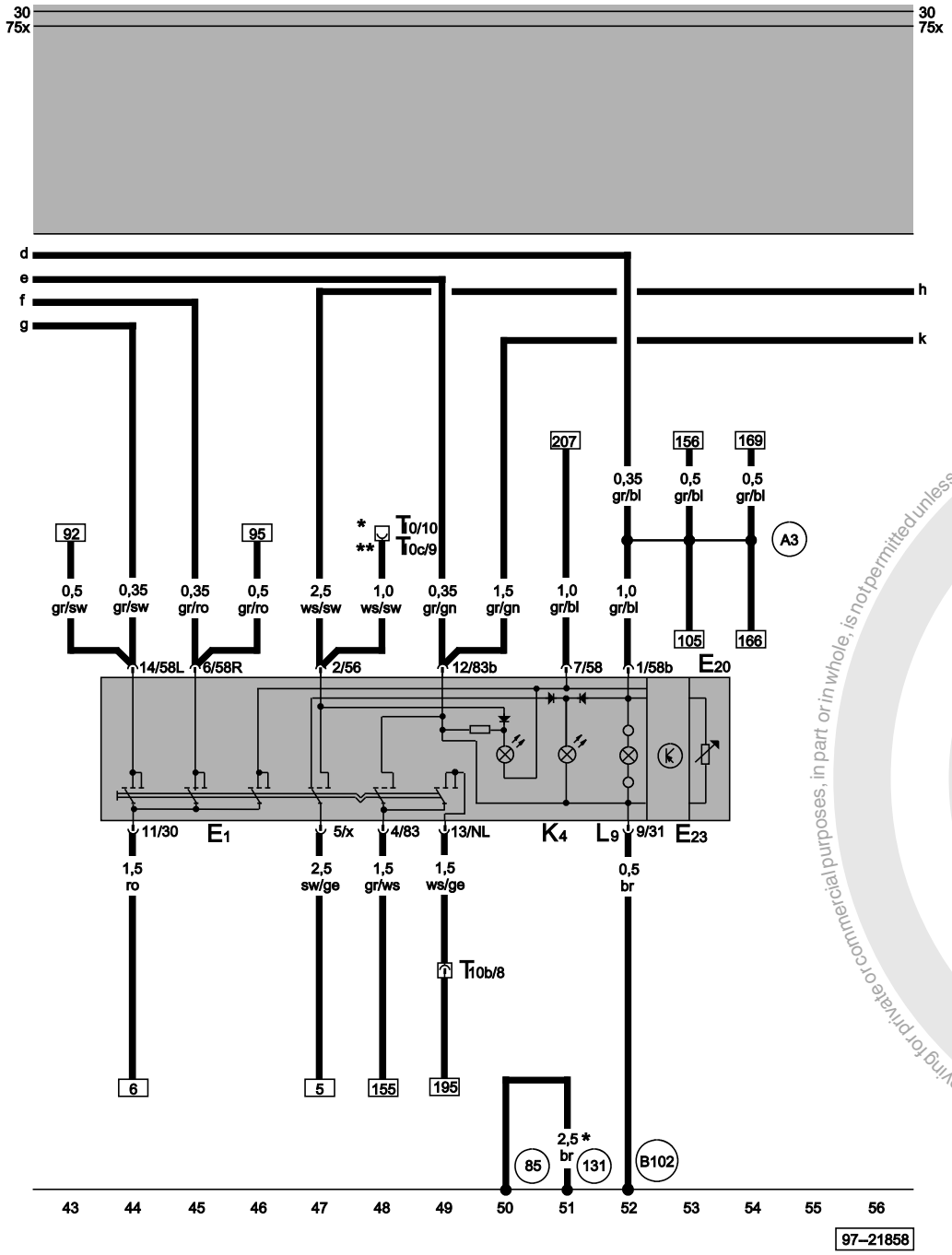

Light switch, switch and instrument illumination regulator

E1	Light switch
E20	Switch and instrument illumination regulator
E23	Front and rear fog light switch
K4	Side light warning lamp
L9	Light switch illumination bulb
T10	10-pin connector, white, near relay station
T10b	10-pin connector, black, near relay station
T10c	10-pin connector, blue, near relay station
85	Earth connection 1, in engine compartment wiring harness
131	Earth connection 2, in engine compartment wiring harness
A3	Positive connection (58), in dash panel wiring harness
B102	Earth connection, in front left interior wiring harness
*	Only models with a petrol engine
**	Only models with a diesel engine

ws	=	white
sw	=	black
ro	=	red
br	=	brown
gn	=	green
bl	=	blue
gr	=	grey
li	=	purple
ge	=	yellow
or	=	orange
rs	=	pink

Copyright by Volkswagen AG. Copying for private or commercial purposes, in part or in whole, is not permitted unless authorised by Volkswagen AG. Volkswagen AG does not guarantee or accept any liability with respect to the correctness of information in this document.

satelettronica

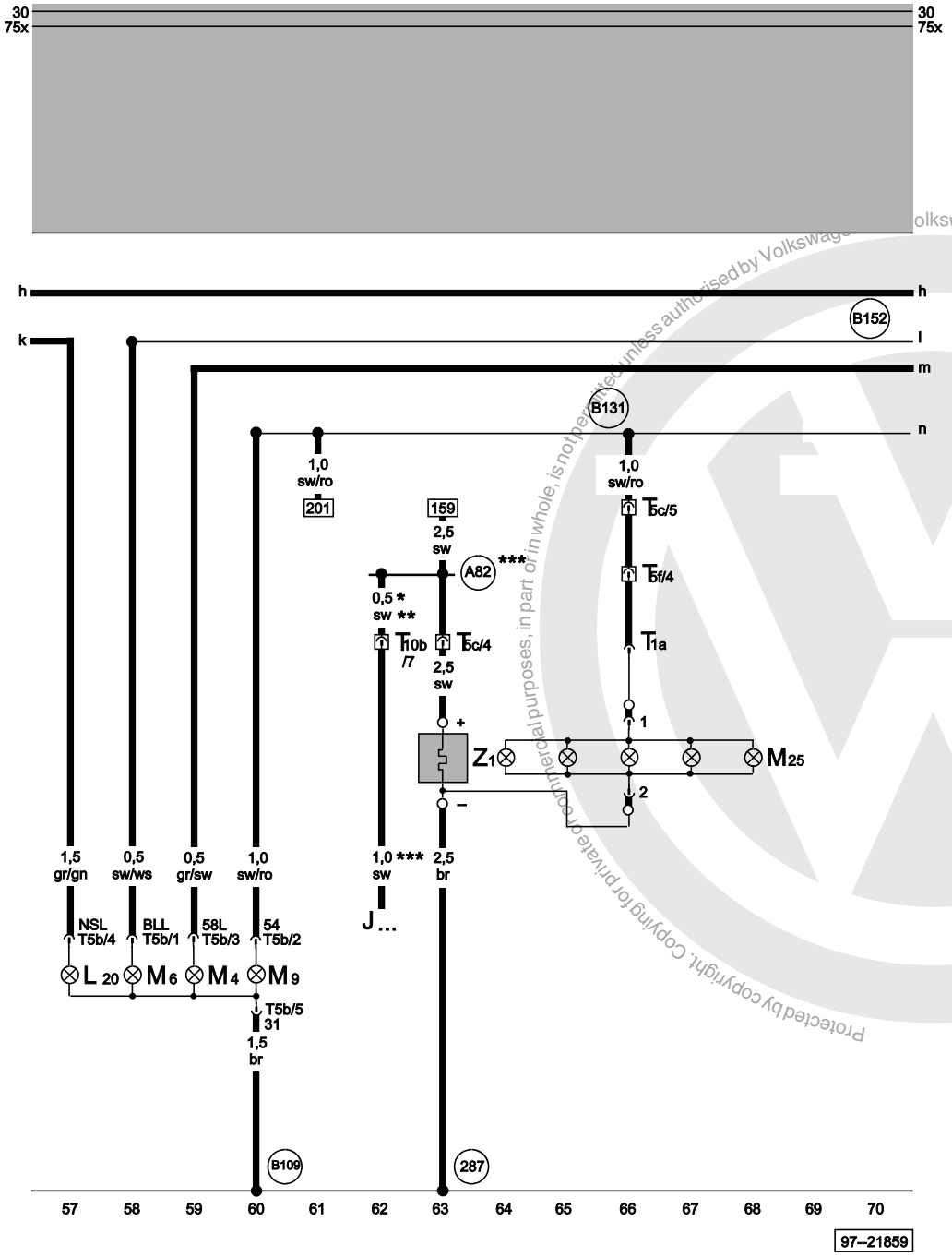

Left tail light, left brake light, rear fog light, heated rear window

J...	Injection system control units
L20	Rear fog light bulb
M4	Left tail light bulb
M6	Rear left turn signal bulb
M9	Left brake light bulb
M25	High level brake light bulb
T1a	1-pin connector, black, in rear lid
T5b	5-pin connector, black, on left rear light
T5c	5-pin connector, black, in rear lid feeder wiring harness
T5f	5-pin connector, black, in rear lid
T10b	10-pin connector, black, near relay station
Z1	Heated rear window
A82	Connection (windscreen heater), in dash panel wiring harness
B109	Earth connection, in rear left interior wiring harness
B131	Connection (54), in interior wiring harness
B152	Connection (BL), in interior wiring harness
287	Earth connection, in rear lid feeder wiring harness
*	Not with all levels of equipment
**	Not models with an automatic gearbox
***	Only models with a petrol engine

ws	=	white
sw	=	black
ro	=	red
br	=	brown
gn	=	green
bl	=	blue
gr	=	grey
li	=	purple
ge	=	yellow
or	=	orange
rs	=	pink

Protected by copyright. Copying for private or commercial purposes, in part or in whole, is not permitted unless authorised by Volkswagen AG. Volkswagen AG does not guarantee or accept any liability with respect to the correctness of information in this document. Copyright by Volkswagen AG.
satelettronica

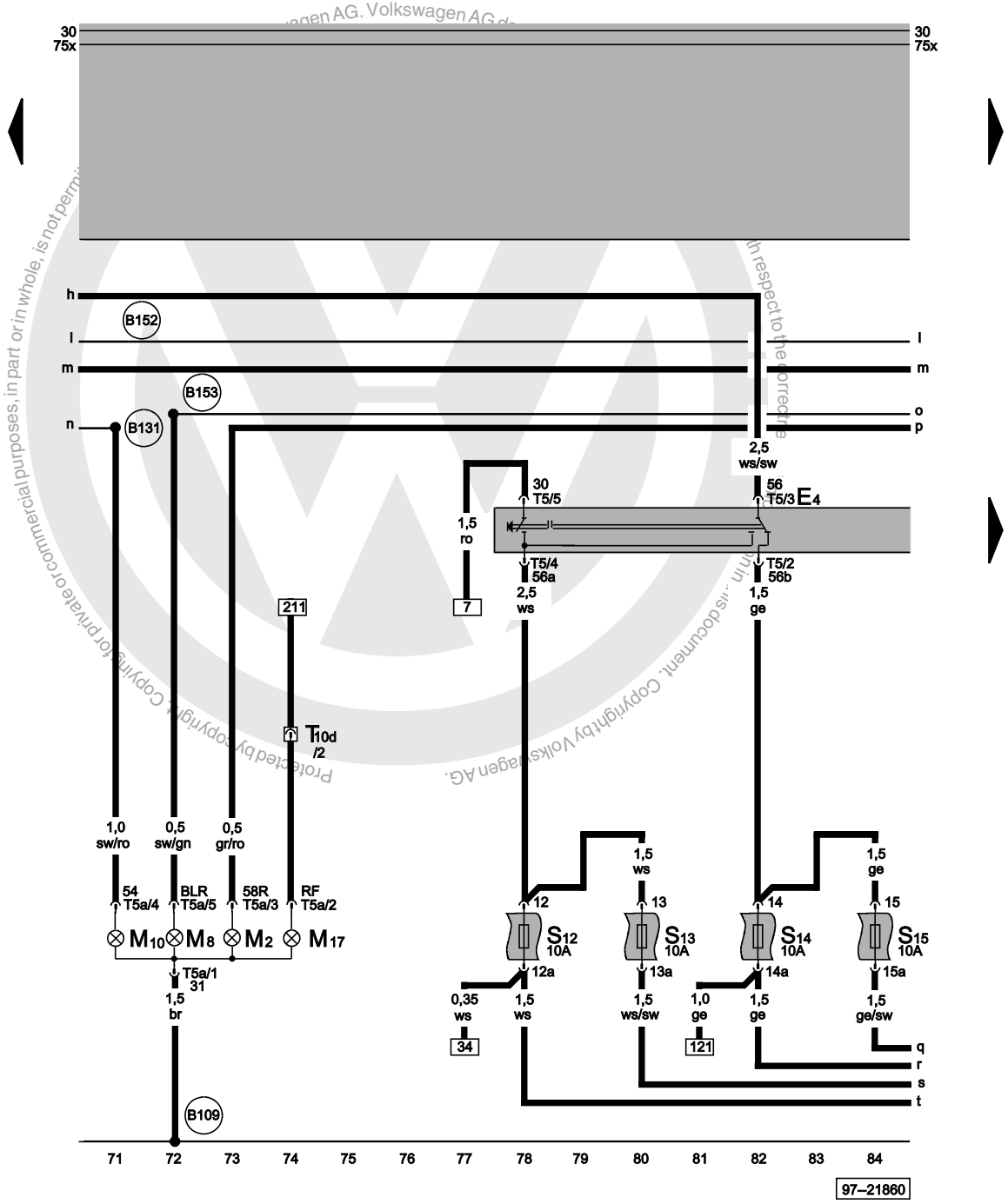

Right tail light, right brake light, reversing light, headlight dipper/flasher switch

E4	Headlight dipper and flasher switch
M2	Right tail light bulb
M8	Rear right turn signal bulb
M10	Right brake light bulb
M17	Right reversing light bulb
S12	Fuse on fuse holder
S13	Fuse on fuse holder
S14	Fuse on fuse holder
S15	Fuse on fuse holder
T5	5-pin connector, black, behind steering column switch trim
T5a	5-pin connector, black, on rear right tail light
T10d	10-pin connector, red, near relay station
B109	Earth connection, in rear left interior wiring harness
B131	Connection (54), in interior wiring harness
B152	Connection (BL), in interior wiring harness
B153	Connection (RTS), in interior wiring harness

ws	=	white
sw	=	black
ro	=	red
br	=	brown
gn	=	green
bl	=	blue
gr	=	grey
li	=	purple
ge	=	yellow
or	=	orange
rs	=	pink

satelettronica

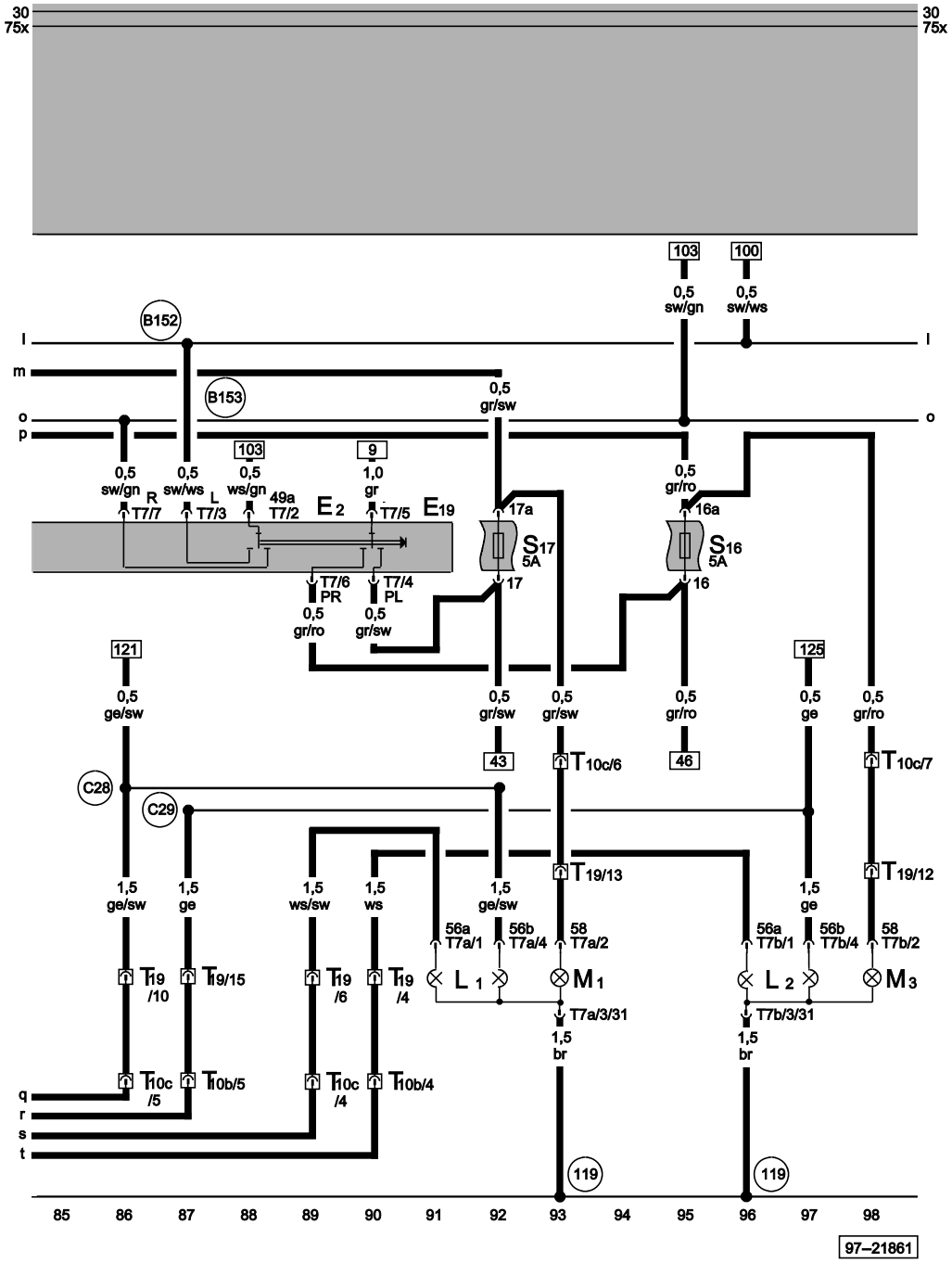

Turn signal switch, parked light switch, front bulbs

E2	Turn signal switch
E19	Parking light switch
L1	Left twin filament bulb
L2	Right twin filament bulb
M1	Left side light bulb
M3	Right side light bulb
S16	Fuse on fuse holder
S17	Fuse on fuse holder
T7	7-pin connector, black, behind steering column switch trim
T7a	7-pin connector, black, near left headlight
T7b	7-pin connector, black, near left headlight
T10b	10-pin connector, black, near relay station
T10c	10-pin connector, blue, near relay station
T19	10-pin connector, black, on front left in engine compartment
119	Earth connection 1, in headlight wiring harness
B152	Connection (BL), in interior wiring harness
B153	Connection (RTS), in interior wiring harness
C28	Connection 1 (56b), in headlight wiring harness
C29	Connection 2 (56b), in headlight wiring harness

ws	=	white
sw	=	black
ro	=	red
br	=	brown
gn	=	green
bl	=	blue
gr	=	grey
li	=	purple
ge	=	yellow
or	=	orange
rs	=	pink

Protected by copyright. Copyright by Volkswagen AG. Copying for private or commercial purposes, in part or in whole, is not permitted unless authorised by Volkswagen AG. Volkswagen AG does not guarantee or accept any liability with respect to the correctness of information in this document.
satelettronica

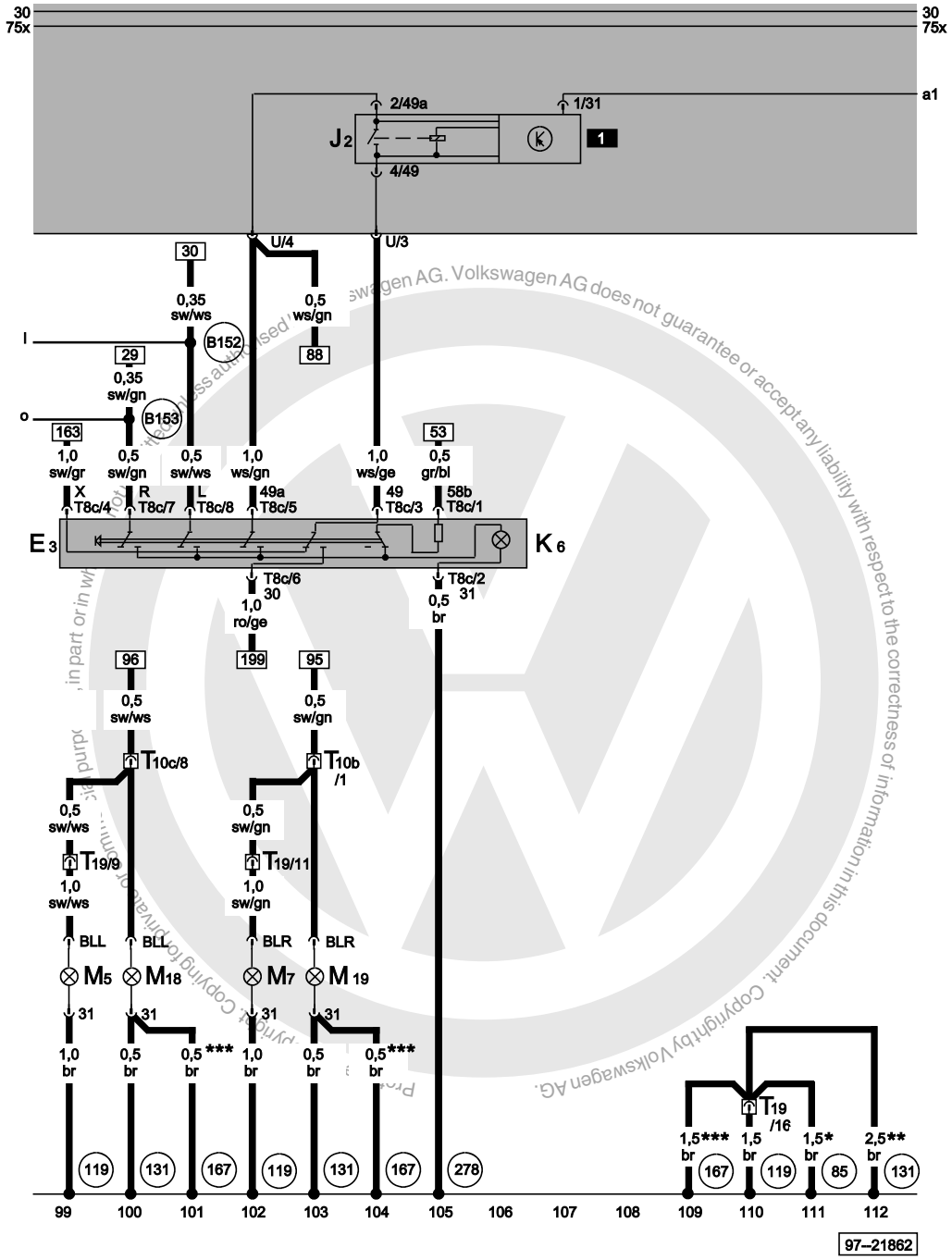

Hazard warning light relay, hazard warning light switch

E3	Hazard warning light switch
J2	Hazard warning light relay
K6	Hazard warning light system warning lamp
M5	Front left turn signal bulb
M7	Front right turn signal bulb
M18	Left side repeater turn signal bulb
M19	Right side repeater turn signal bulb
T8c	8-pin connector, black, on hazard warning light switch
T10b	10-pin connector, black, near relay station
T10c	10-pin connector, blue, near relay station
T19	19-pin connector, black, on front left in engine compartment
85	Earth connection 1, in engine compartment wiring harness
119	Earth connection 1, in headlight wiring harness
131	Earth connection 2, in engine compartment wiring harness
167	Earth connection 4, in engine compartment wiring harness
278	Earth connection 4, in interior wiring harness
B152	Connection (BL), in interior wiring harness
B153	Connection (RTS), in interior wiring harness
*	Only petrol engine models with manual gearbox
**	Only models with a diesel engine
***	Only automatic gearbox

ws	=	white
sw	=	black
ro	=	red
br	=	brown
gn	=	green
bl	=	blue
gr	=	grey
li	=	purple
ge	=	yellow
or	=	orange
rs	=	pink

satelettronica

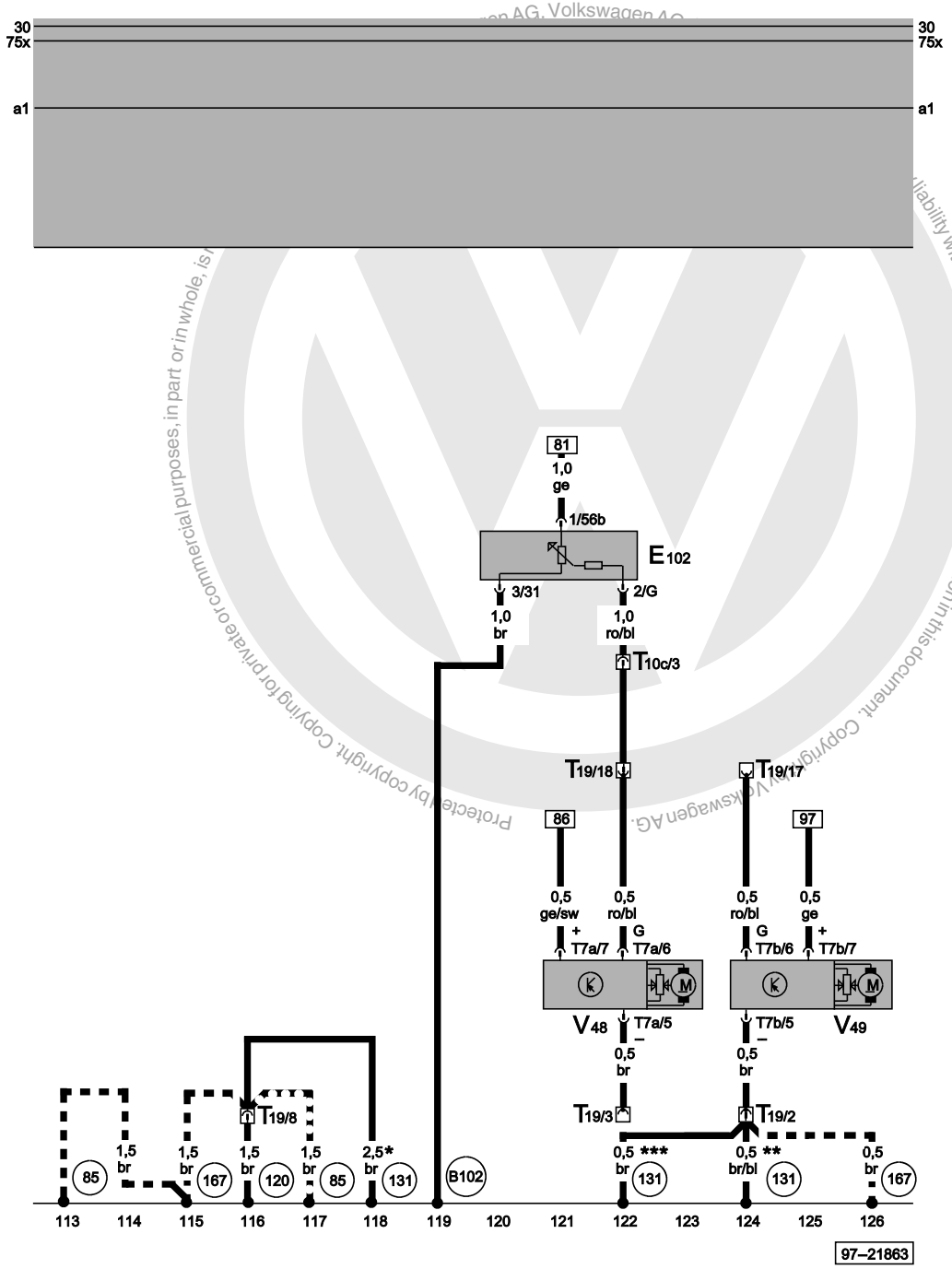

Headlight range control

E102	Headlight range control regulator
T7a	7-pin connector, black, near left headlight
T7b	7-pin connector, black, near left headlight
T10c	10-pin connector, blue, near relay station
T19	19-pin connector, black, on front left in engine compartment
V48	Left headlight range control motor
V49	Right headlight range control motor
12	Earth point, on left in engine compartment
85	Earth connection 1, in engine compartment wiring harness
120	Earth connection 2, in headlight wiring harness
131	Earth connection 2, in engine compartment wiring harness
167	Earth connection 4, in engine compartment wiring harness
B102	Earth connection, in front left interior wiring harness
*	Only models with a diesel engine
**	Only engine codes AGD and AHG
***	Not with engine codes AGD and AHG
<fo:external-graphic src="/../PDOC/samba/tools/png-convert/out//slp/ft_icons/m_m_m3.png" content-width="20pt" scaling="uniform"/>	Only automatic gearbox
<fo:external-graphic src="/../	Only petrol engine models with manual gearbox

ws = white

Protected by copyright. Copying for private or commercial purposes, in part or in whole, is not permitted unless authorised by Volkswagen AG. Volkswagen AG does not guarantee or accept any liability with respect to the correctness of information in this document. Copyright by Volkswagen AG.

satelettronica

sw	=	black
ro	=	red
br	=	brown
gn	=	green
bl	=	blue
gr	=	grey
li	=	purple
ge	=	yellow
or	=	orange
rs	=	pink

PDOC/
samba/
tools/
png-
convert/
out//slp/
ft_icons/
kkk_inv.p
ng"
content-
width="2
0pt"
scaling="
uniform"/
>

Protected by copyright. Copying for private or commercial purposes, in part or in whole, is not permitted unless authorised by Volkswagen AG. Volkswagen AG does not guarantee or accept any liability with respect to the correctness of information in this document. Copyright by Volkswagen AG.

satelettronica

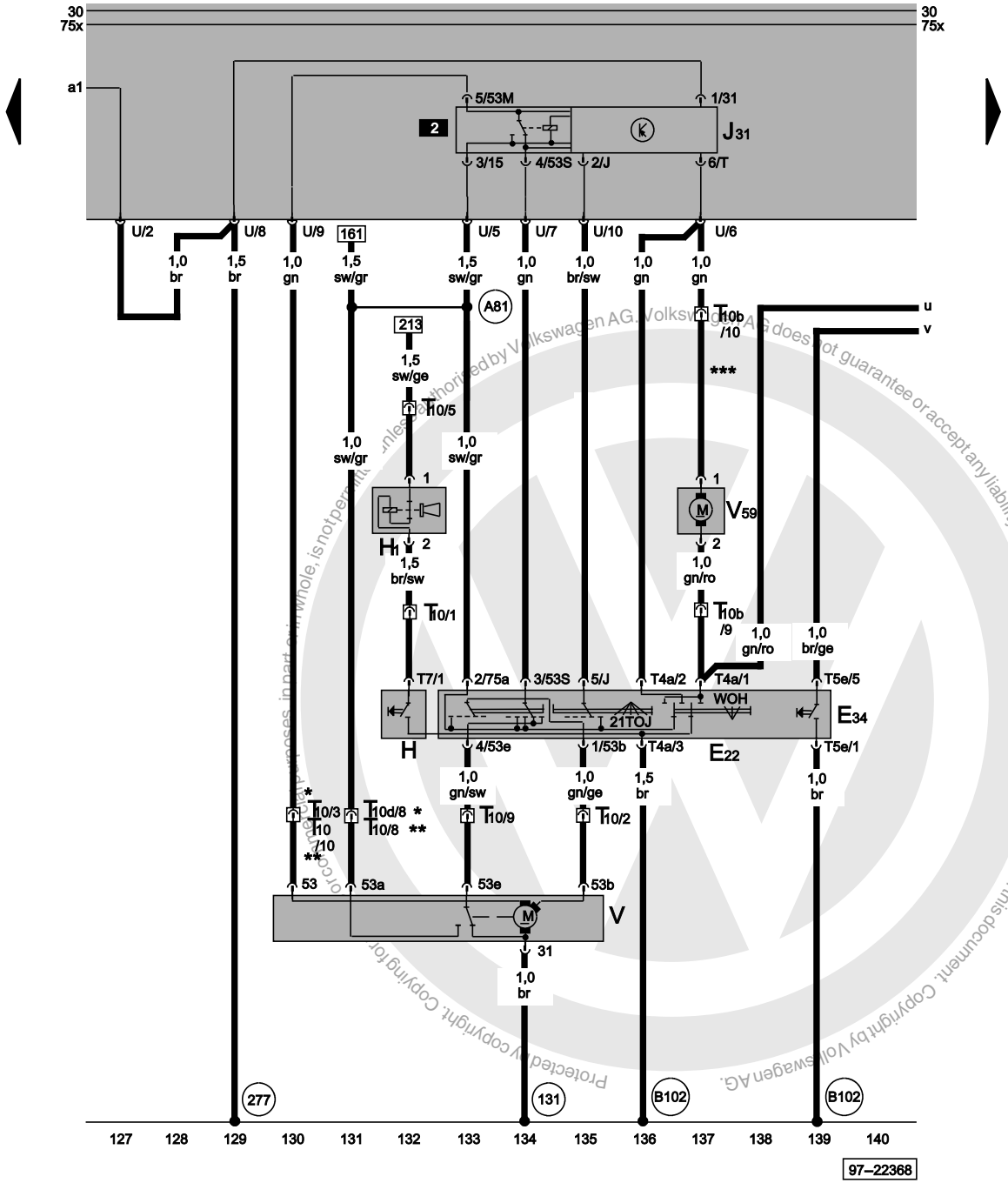

Intermittent wipe wiper switch, wiper motor, front and rear washer pump, intermittent wash and wipe relay, horn

E22	Intermittent wiper switch
E34	Rear wiper switch
H	Horn plate
H1	Horn
J31	Automatic intermittent wash and wipe relay
T4a	4-pin connector, black, behind steering column switch trim
T5e	5-pin connector, black, behind steering column switch trim
T7	7-pin connector, black, behind steering column switch trim
T10	10-pin connector, white, near relay station
T10b	10-pin connector, black, near relay station
T10d	10-pin connector, red, near relay station
V	Windscreen wiper motor
V59	Windscreen and rear window washer pump
131	Earth connection 2, in engine compartment wiring harness
277	Earth connection 3, in interior wiring harness
A81	Connection 2 (X), in dash panel wiring harness
B102	Earth connection, in front left interior wiring harness
*	Only models with a petrol engine
**	Only models with a diesel engine
***	Not with headlight washer system

ws	=	white
sw	=	black
ro	=	red
br	=	brown
gn	=	green
bl	=	blue
gr	=	grey
li	=	purple
ge	=	yellow
or	=	orange
rs	=	pink

satelettronica

Protected by copyright. Copyright by Volkswagen AG. Volkswagen AG does not guarantee or accept any liability with respect to the correctness of information in this document. Copyright by Volkswagen AG, unless authorised by Volkswagen AG, is not permitted for commercial purposes, in part or in whole, is not permitted for commercial purposes, or distribution to third parties.

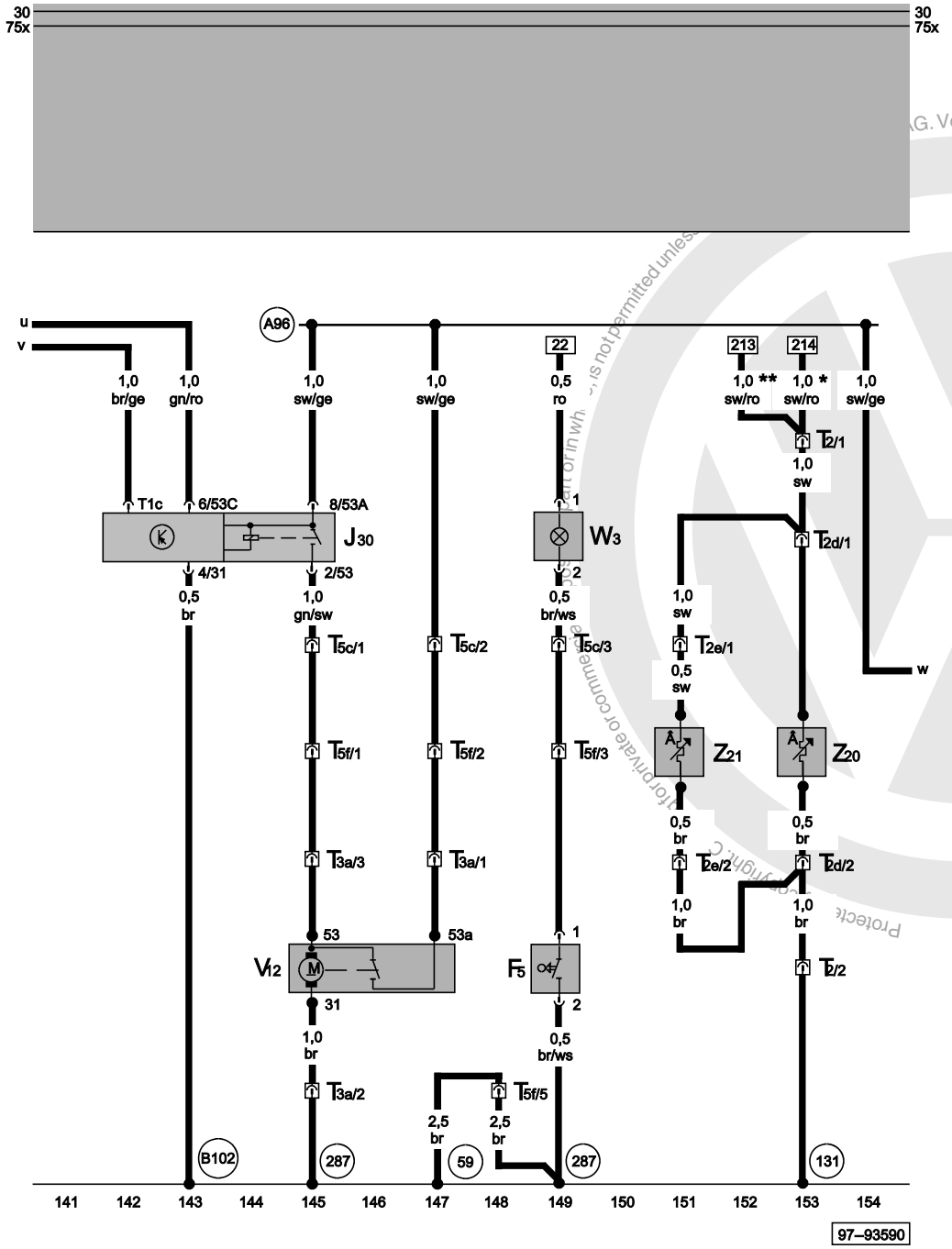

Rear window wiper motor, luggage compartment light, heater element for washer jet

F5	Luggage compartment light switch
J30	Rear window wiper and washer relay
T1c	Single connector, black, in rear wash and wipe system relay
T2	2-pin connector, black, in left plenum chamber
T2d	2-pin connector, black, on left on engine compartment lid
T2e	2-pin connector, black, on right on engine compartment lid
T3a	3-pin connector, black, in rear lid near wiper motor
T5c	5-pin connector, black, in rear lid feeder wiring harness
T5f	5-pin connector, black, in rear lid
V12	Rear window wiper motor
W3	Luggage compartment light
Z20	Left washer jet heater element
Z21	Right washer jet heater element
59	Earth point, near left tail light
131	Earth connection 2, in engine compartment wiring harness
287	Earth connection, in rear lid feeder wiring harness
A96	Connection (53a), in dash panel wiring harness
B102	Earth connection, in front left interior wiring harness
*	Only models with a petrol engine
**	Only models with a diesel engine

ws	=	white
sw	=	black
ro	=	red
br	=	brown
gn	=	green
bl	=	blue
gr	=	grey
li	=	purple
ge	=	yellow
or	=	orange
rs	=	pink

satelettronica

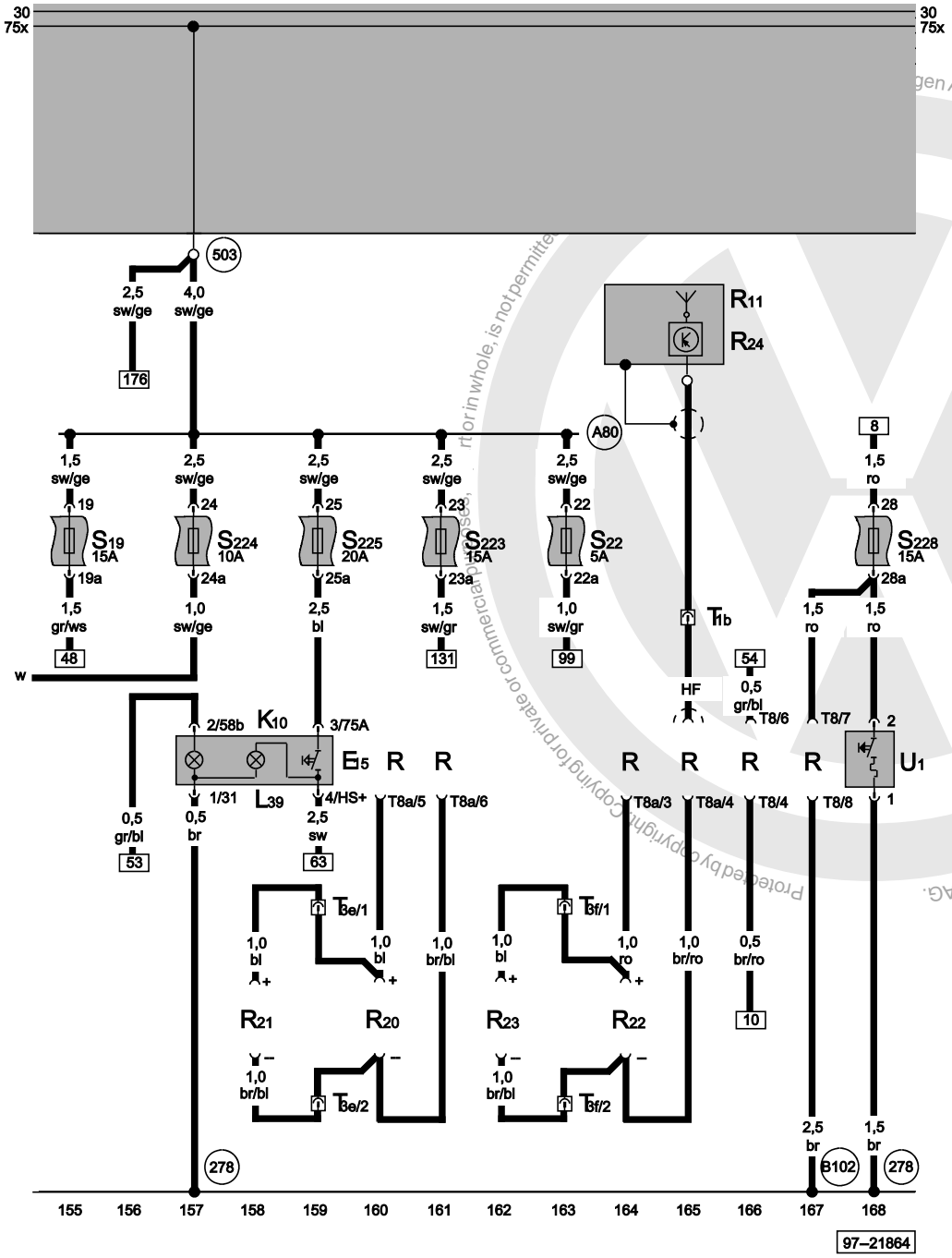

Radio connection, heated rear window switch, cigarette lighter

E15	Heated rear window switch
K10	Heated rear window warning lamp
L39	Heated rear window switch illumination bulb
R	Radio
R11	Aerial
R24	Aerial amplifier
R20	Front left treble loudspeaker
R21	Front left bass loudspeaker
R22	Front right treble loudspeaker
R23	Front right bass loudspeaker
S19	Fuse on fuse holder
S22	Fuse on fuse holder
S223	Fuse on fuse holder
S224	Fuse on fuse holder
S225	Fuse on fuse holder
S228	Fuse on fuse holder
T1b	Single connector, black, on lower part of right A-pillar
T3e	3-connector, black, on lower part of left A-pillar
T3f	3-pin connector, black, on lower part of right A-pillar
T8	8-pin connector, black, on radio
T8a	8-pin connector, brown, on radio
U1	Cigarette lighter
278	Earth connection 4, in interior wiring harness
503	Screw connection (75x), on relay plate
A80	Connection 1 (X), in dash panel wiring harness
B102	Earth connection, in front left interior wiring harness

ws	=	white
sw	=	black
ro	=	red
br	=	brown
gn	=	green
bl	=	blue
gr	=	grey
li	=	purple
ge	=	yellow
or	=	orange
rs	=	pink

Volkswagen AG does not guarantee or accept any liability with respect to the correctness of information in this document. Copyright by Volkswagen AG. Protected by copyright. Copying for private or commercial purposes, in part or in whole, is not permitted unless authorised by Volkswagen AG.

satelettronica

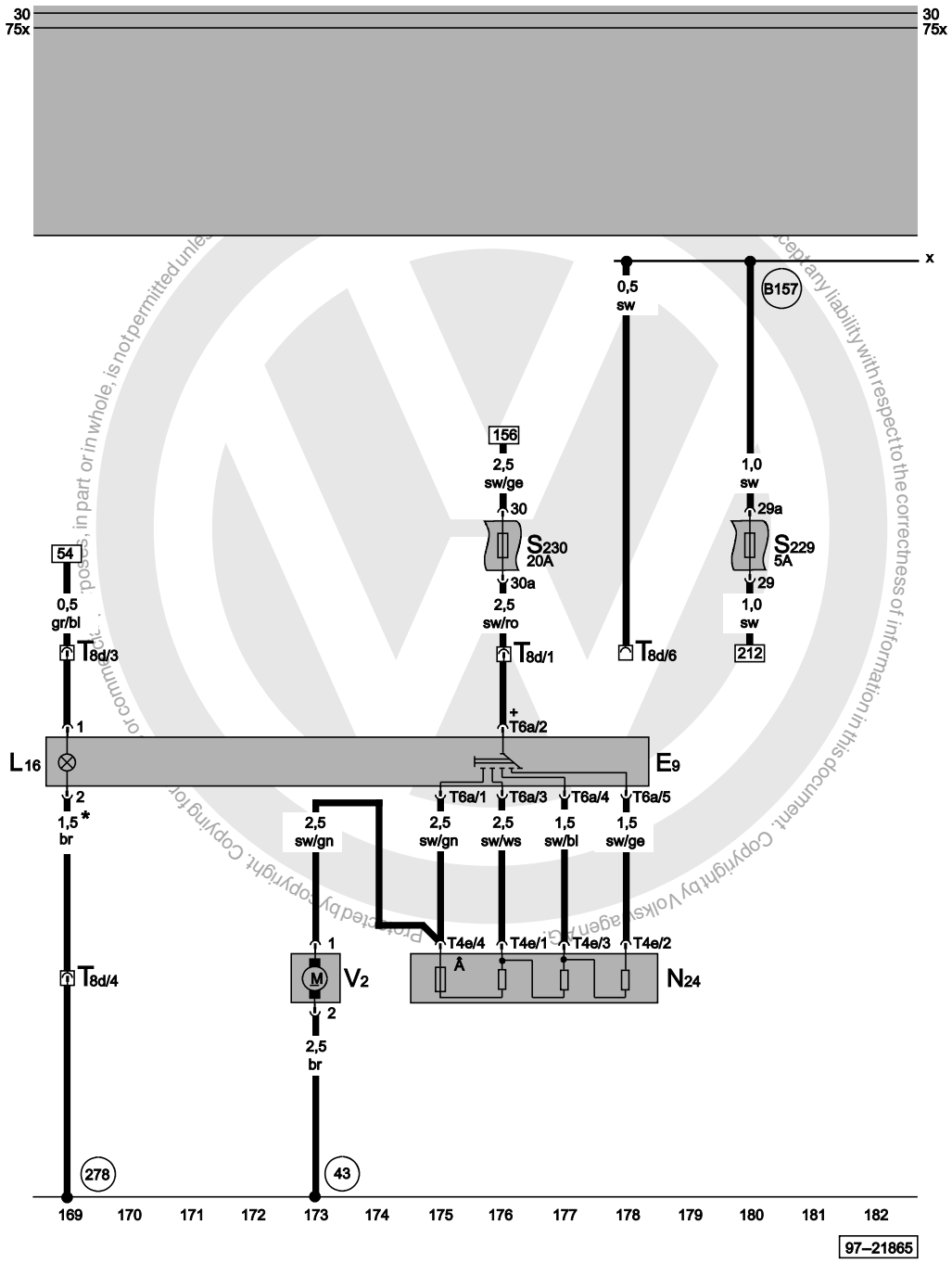

Fresh air blower, fresh air blower switch, fresh air/ recirculated air flap positioning motor

E9	Fresh air blower switch
L16	Fresh air regulator illumination bulb
N24	Fresh air blower series resistor with overheating fuse
S229	Fuse on fuse holder
S230	Fuse on fuse holder
T4e	4-pin connector, black, on fresh air blower series resistor
T6a	6-pin connector, black, on fresh air blower switch
T8d	8-pin connector, black, behind dash panel
V2	Fresh air blower
43	Earth point, lower part of right A-pillar
278	Earth connection 4, in interior wiring harness
B157	Positive connection 3 (15a), in interior wiring harness
*	For Diesel engine 1.0mm²

ws	=	white
sw	=	black
ro	=	red
br	=	brown
gn	=	green
bl	=	blue
gr	=	grey
li	=	purple
ge	=	yellow
or	=	orange
rs	=	pink

satelettronica

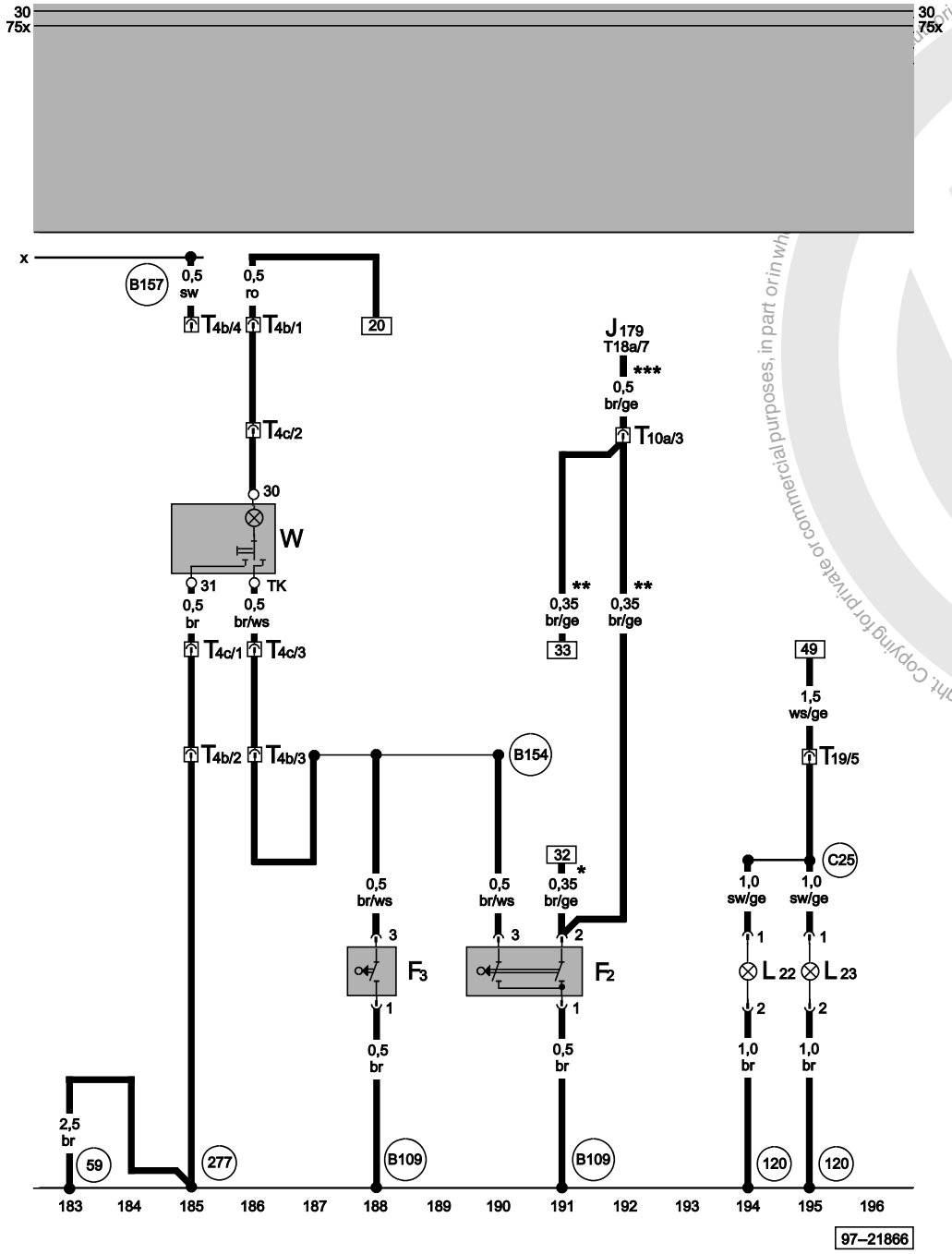

Interior light, door contact switch

F2	Driver door contact switch
F3	Front passenger door contact switch
L22	Left fog light bulb
L23	Right fog light bulb
J179	Automatic glow period control unit, above relay plate
T4b	4-pin connector, black, on left behind dash panel
T4c	4-pin connector, black, in interior light wiring harness
T10a	10-pin connector, near relay station
T18a	18-pin connector, black, on automatic glow period control unit
T19	19-pin connector, black, on front left in engine compartment
W	Front interior light
59	Earth point, left tail light
120	Earth connection 2, in headlight wiring harness
277	Earth connection 3, in interior wiring harness
B109	Earth connection, in rear left interior wiring harness
B154	Connection 1 (DCt), in interior wiring harness
B157	Positive connection 3 (15a), in interior wiring harness
C25	Connection (fog light), in front lighting wiring harness
*	Only models with a petrol engine
**	Only models with a diesel engine
***	Only engine code AEF

ws	=	white
sw	=	black
ro	=	red
br	=	brown
gn	=	green
bl	=	blue
gr	=	grey
li	=	purple
ge	=	yellow
or	=	orange
rs	=	pink

Protected by copyright. Copying for private or commercial purposes, in part or in whole, is not permitted unless authorised by Volkswagen AG. Volkswagen AG does not guarantee or assume any liability with respect to the correctness of information in this document. Copyright by Volkswagen AG.

satelettronica

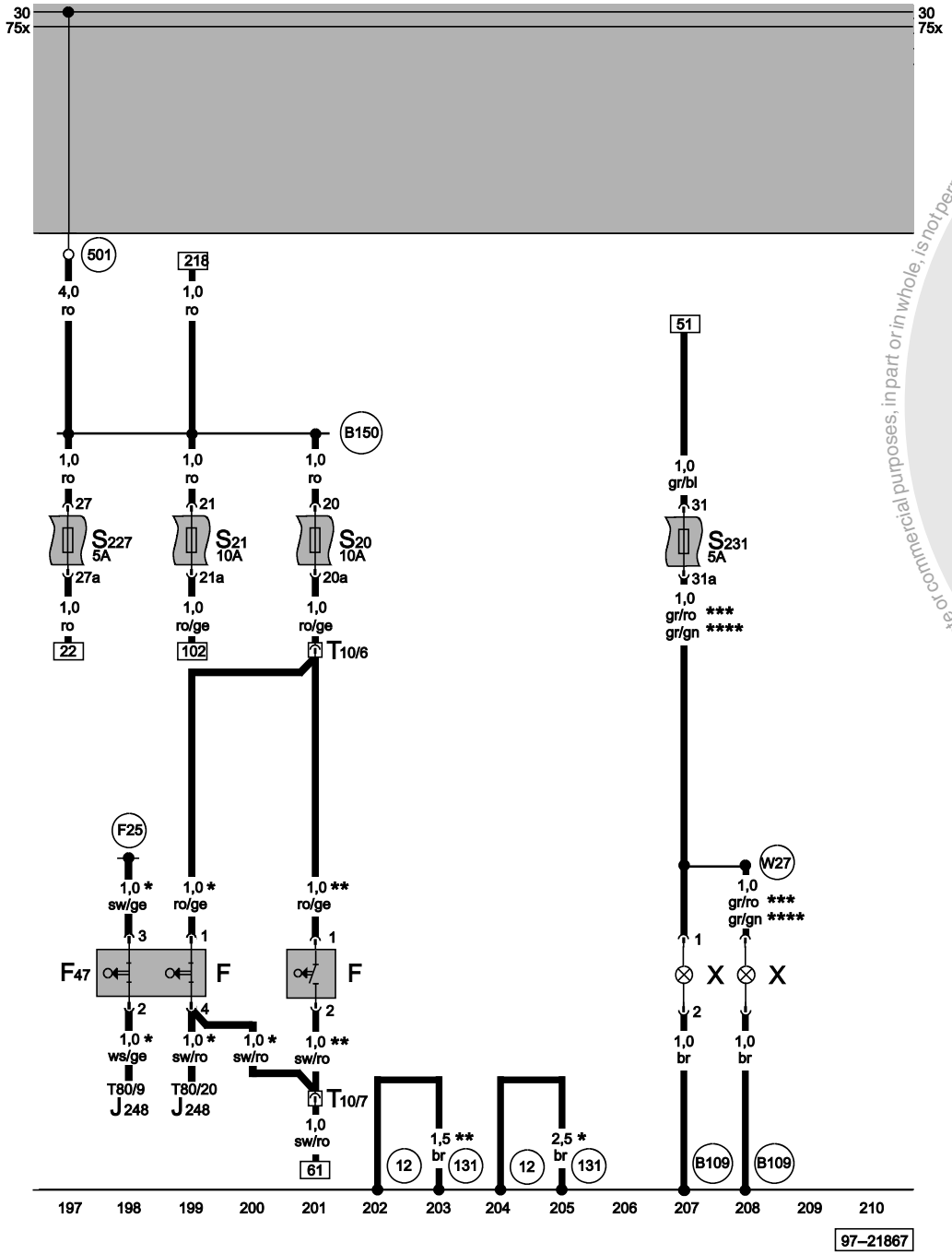

Brake light switch, number plate light

F	Brake light switch (00526)
F47	Brake pedal switch for diesel direct injection system
J248	Diesel direct injection system control unit, on right in plenum chamber
S20	Fuse on fuse holder
S21	Fuse on fuse holder
S227	Fuse on fuse holder
S231	Fuse on fuse holder
T10	10-pin connector, white, near relay station
X	Number plate light
T80	80-pin connector, black
12	Earth point, on left in engine compartment
131	Earth connection 3, in engine compartment wiring harness
501	Screw connection 2 (30), on relay plate
B109	Earth connection, in rear left interior wiring harness
B150	Positive connection 2 (30a), in interior wiring harness
F25	Connection 1, in diesel direct injection system wiring harness
W27	Positive connection (58), in tail lights wiring harness
*	Only engine codes AGD and AHG
**	Only engine code AEF
***	Only models with a petrol engine
****	Only models with a diesel engine

ws	=	white
sw	=	black
ro	=	red
br	=	brown
gn	=	green
bl	=	blue
gr	=	grey
li	=	purple
ge	=	yellow
or	=	orange
rs	=	pink

Protected by copyright. Copying for private or commercial purposes, in part or in whole, is not permitted unless authorised by Volkswagen AG. Volkswagen AG does not guarantee or accept any liability with respect to the correctness of information in this document. Copyright by Volkswagen AG.
satelettronica

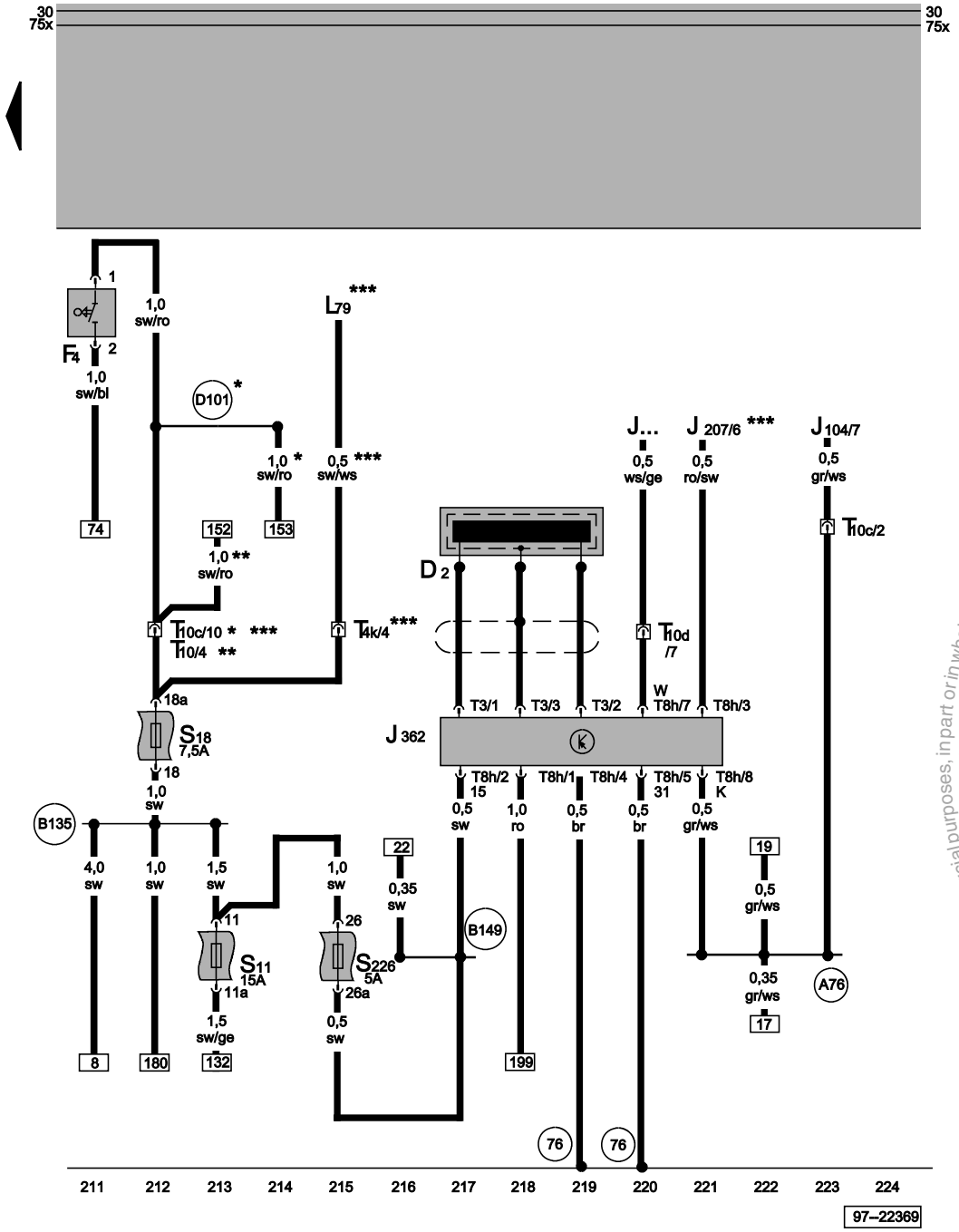

Immobilizer, reversing light switch

D2	Immobilizer reader coil (01128)
F4	Reversing light switch
L79	Selector lever illumination
J...	Injection system control unit, centre on bulkhead
J104	ABS control unit, on left in engine compartment
J207	Starter inhibitor relay, next to relay plate
J362	Immobilizer control unit, next to steering column
S11	Fuse on fuse holder
S18	Fuse on fuse holder
S226	Fuse on fuse holder
T3	3-pin connector, black, on immobilizer control unit
T4k	4-pin connector, black (LHD)
T8h	8-pin connector, black, on immobilizer control unit
T10	10-pin connector, near relay station
T10c	10-pin connector, near relay station
T10d	10-pin connector, red, near relay station
76	Earth point, near selector mechanism
A76	Connection (K-diagnosis wire), in dash panel wiring harness
B135	Connection (15a), in interior wiring harness
B149	Positive connection 2 (15a), in interior wiring harness
D101	Connection 1, in engine compartment wiring harness
*	Only models with a petrol engine
**	Only models with a diesel engine
***	Only models with an automatic gearbox

ws	=	white
sw	=	black
ro	=	red
br	=	brown
gn	=	green
bl	=	blue
gr	=	grey
li	=	purple
ge	=	yellow
or	=	orange
rs	=	pink

Protected by copyright. Copying for private or commercial purposes, in part or in whole, is not permitted unless authorised by Volkswagen AG. Volkswagen AG does not guarantee or accept any liability with respect to the correctness of information in this document. Copyright by Volkswagen AG.

satelettronica

Airbag

From September 1997

For alternatives to relay and fuse positions as well as multi-pin connector wiring - see "Fitting locations" section.

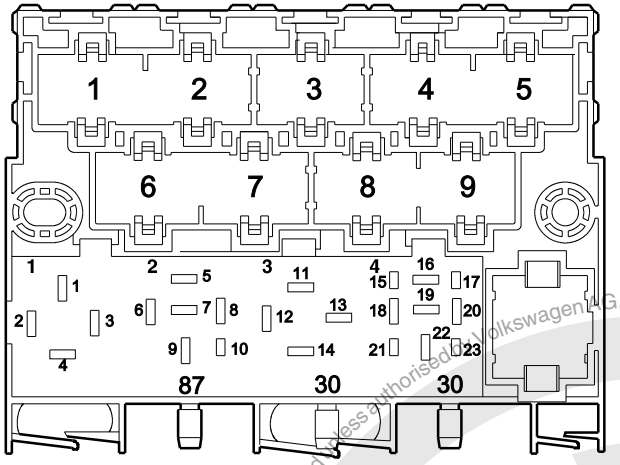

97--20672

Fuse colours

30 A - green
25 A - white
20 A - yellow
15 A - blue
10 A - red
7.5 A - brown
5 A - beige
3 A - lilac

Protected by copyright. Copying for private or commercial purposes, in part or in whole, is not permitted unless authorised by Volkswagen AG. Volkswagen AG does not guarantee or accept any liability with respect to the correctness of information in this document. Copyright by Volkswagen AG.

satelettronica

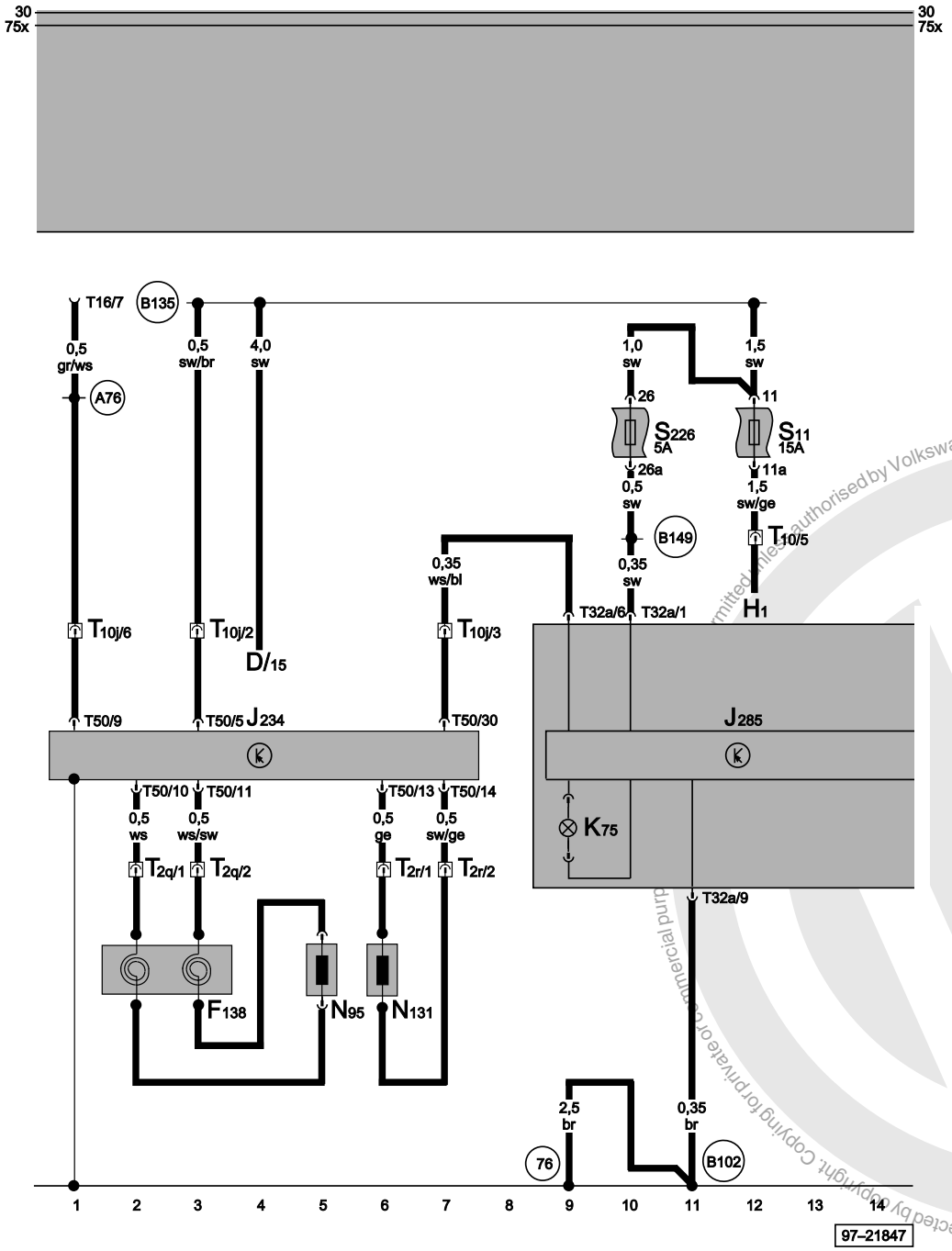

Airbag control unit, airbag warning lamp, airbag igniter, airbag coil connector, self-diagnosis connector

D	Ignition/starter switch
F138	Coil spring for airbag
H1	Signalhorn
J234	Airbag control unit, behind console
J285	Control unit with display in dash panel insert
J429	Central locking control unit
K75	Airbag warning lamp
N95	Airbag igniter, driver side
N131	Airbag igniter 1, front passenger side
S11	Fuse in relay plate fuse box
S226	Fuse in fuse holder
T2q	2-pin connector, black, behind steering column switch trim
T2r	2-pin connector, right behind dash panel
T10	10-pin connector, white, near relay station
T10j	10-pin connector, yellow, near relay station
T16	16-pin connector, violet, self-diagnosis connector
T32a	32-pin connector, blue
T50	50-pin connector, black
76	Earth point, near gear selector mechanism
A76	Connection (diagnosis wire K), in dash panel wiring harness
B102	Earth connection, in front left interior wiring harness
B135	Connection (15a), in interior wiring harness
B149	Positive connection --2- (15a), in interior wiring harness

ws	=	white
sw	=	black
ro	=	red
br	=	brown
gn	=	green
bl	=	blue
gr	=	grey
li	=	purple
ge	=	yellow
or	=	orange
rs	=	pink

satelettronica

Radio system "alpha" with 2 loudspeakers

From October 1997

Notes:

For information concerning

- Relay and fuse assignment
- Multi-pin connectors
- Control units and relays
- Earth connections

⇒ Overview of Fitting Locations!

For information concerning

- Fault Finding Programs

⇒ Guided Fault Finding

Protected by copyright. Copying for private or commercial purposes, in part or in whole, is not permitted unless authorised by Volkswagen AG. Volkswagen AG does not guarantee or accept any liability with respect to the correctness of information in this document. Copyright by Volkswagen AG.

satelettronica

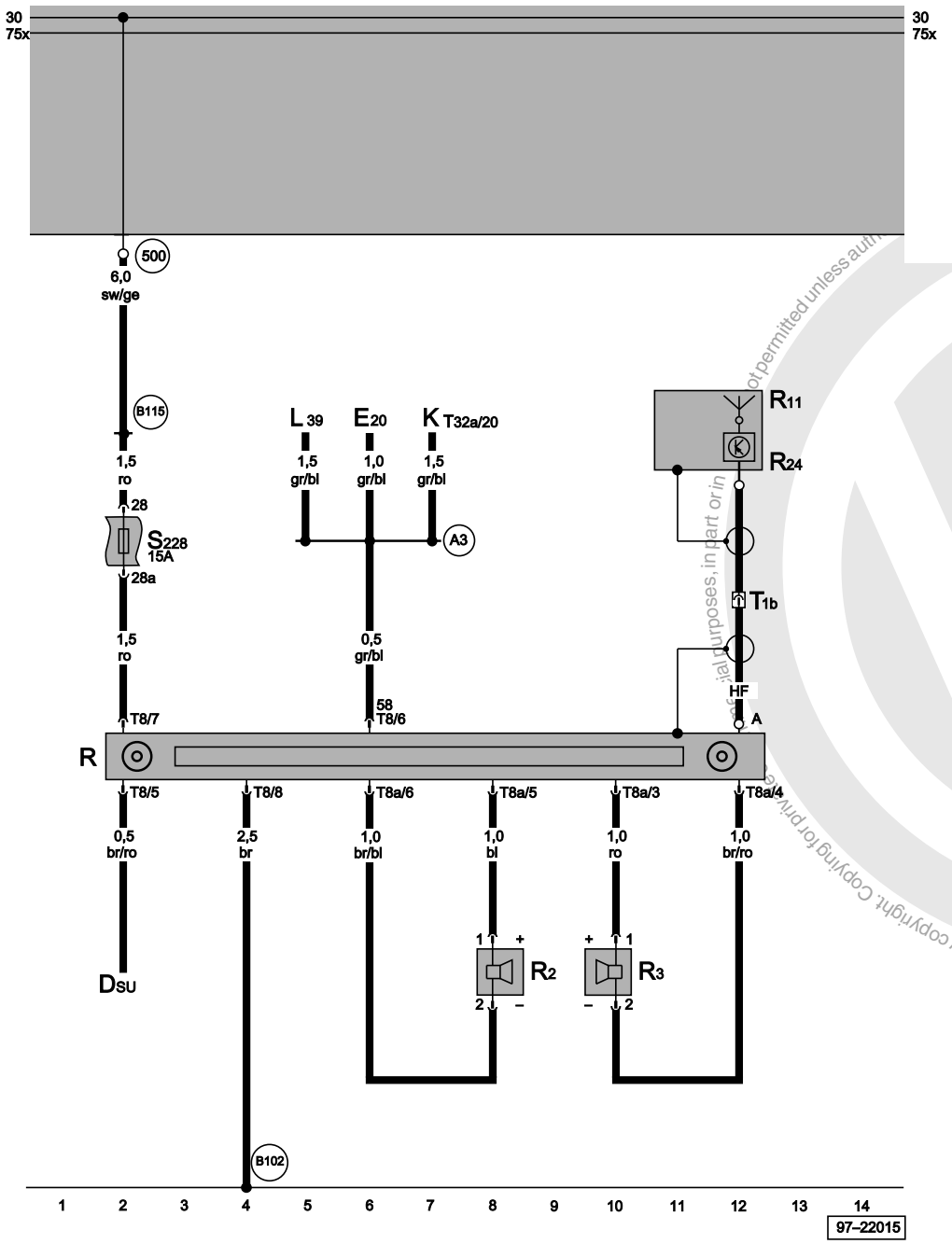

Radio, front loudspeakers, electronically amplified roof aerials

D	Ignition/starter switch
E20	Switch and instrument illumination regulator
K	Dash panel insert
L39	Heated rear window switch illumination bulb
R	Radio
R2	Front left loudspeaker
R3	Front left loudspeaker
R11	Aerial
R24	Aerial amplifier
S228	Fuse on fuse holder
T1b	1-pin connector, on lower part of right A-pillar
T8	8-pin connector, on radio
T8a	8-pin connector, on radio
T32a	32-pin connector, on dash panel insert
500	Screw connection 1 (30), on relay plate
A3	Positive connection (58b), in dash panel wiring harness
B102	Earth connection, in front left interior wiring harness
B115	Positive connection, (30, central electrics), in interior wiring harness

ws	=	white
sw	=	black
ro	=	red
br	=	brown
gn	=	green
bl	=	blue
gr	=	grey
li	=	purple
ge	=	yellow
or	=	orange
rs	=	pink

Protected by copyright. Copying for private or commercial purposes, in part or in whole, is not permitted unless authorised by Volkswagen AG. Volkswagen AG does not guarantee or assume any liability with respect to the correctness of information in this document. Copyright by Volkswagen AG.
satelettronica

Radio system "beta" with 4 loudspeakers

From October 1997

Notes:

For information concerning

- Relay and fuse assignment
- Multi-pin connectors
- Control units and relays
- Earth connections

⇒ Overview of Fitting Locations!

For information concerning

- Fault Finding Programs

⇒ Guided Fault Finding

Protected by copyright. Copying for private or commercial purposes, in part or in whole, is not permitted unless authorised by Volkswagen AG. Volkswagen AG does not guarantee or accept any liability with respect to the correctness of information in this document. Copyright by Volkswagen AG.

satelettronica

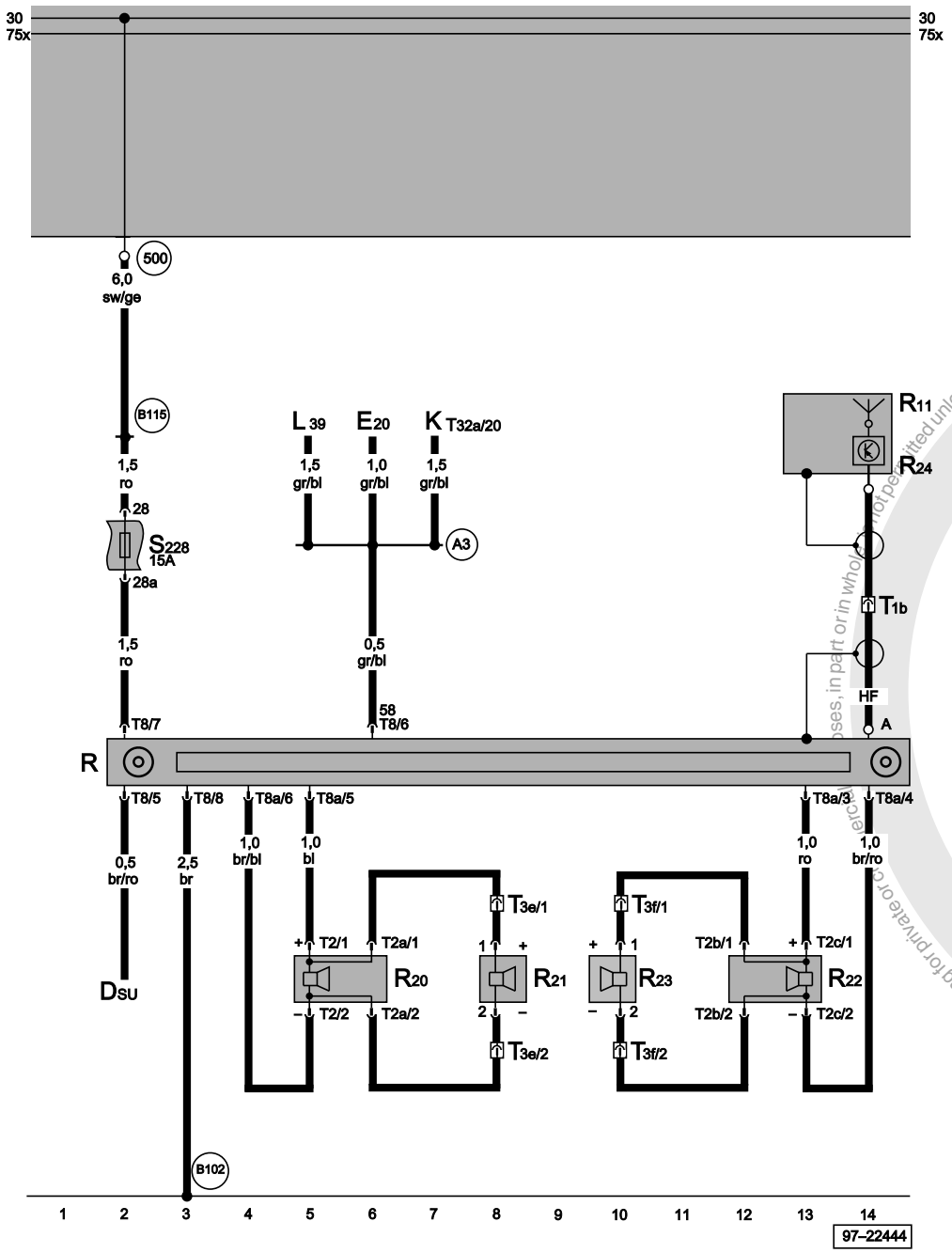

Radio, front loudspeakers, electronically amplified roof aerials

D	Ignition/starter switch
E20	Switch and instrument illumination regulator
K	Dash panel insert
L39	Heated rear window switch illumination bulb
R	Radio
R11	Aerial
R20	Front left treble loudspeaker
R21	Front left bass loudspeaker
R22	Front right treble loudspeaker
R23	Front right bass loudspeaker
R24	Aerial amplifier
S228	Fuse on fuse holder
T1b	1-pin connector, on lower part of right A-pillar
T3e	3-connector, black, on lower part of left A-pillar
T3f	3-pin connector, black, on lower part of right A-pillar
T8	8-pin connector, on radio
T8a	8-pin connector, on radio
T32a	32-pin connector, on dash panel insert
500	Screw connection 1 (30), on relay plate
A3	Positive connection (58b), in dash panel wiring harness
B102	Earth connection, in front left interior wiring harness
B115	Positive connection, (30, central electrics), in interior wiring harness

ws	=	white
sw	=	black
ro	=	red
br	=	brown
gn	=	green
bl	=	blue
gr	=	grey
li	=	purple
ge	=	yellow
or	=	orange
rs	=	pink

Protected by copyright. Copying for private or commercial purposes, in part or in whole, is not permitted unless authorised by Volkswagen AG. Volkswagen AG does not warrant or accept any liability with respect to the correctness of information in this document. Copyright by Volkswagen AG.
satelettronica

1.0 l/37 kW - Motronic, engine code ALL
From June 1997

1.4 l/44 kW - Motronic, engine code AKV with manual gearbox
From June 1997

1.6 l/55 kW - 1AV, engine code AEE with manual gearbox
From June 1997

Notes:
For information concerning
- Relay and fuse assignment
- Multi-pin connectors
- Control units and relays
- Earth connections

⇒ Overview of Fitting Locations!
For information concerning
- Fault Finding Programs

⇒ Guided Fault Finding

Protected by copyright. Copying for private or commercial purposes, in part or in whole, is not permitted unless authorised by Volkswagen AG. Volkswagen AG does not guarantee or accept any liability with respect to the correctness of information in this document. Copyright by Volkswagen AG.

satelettronica

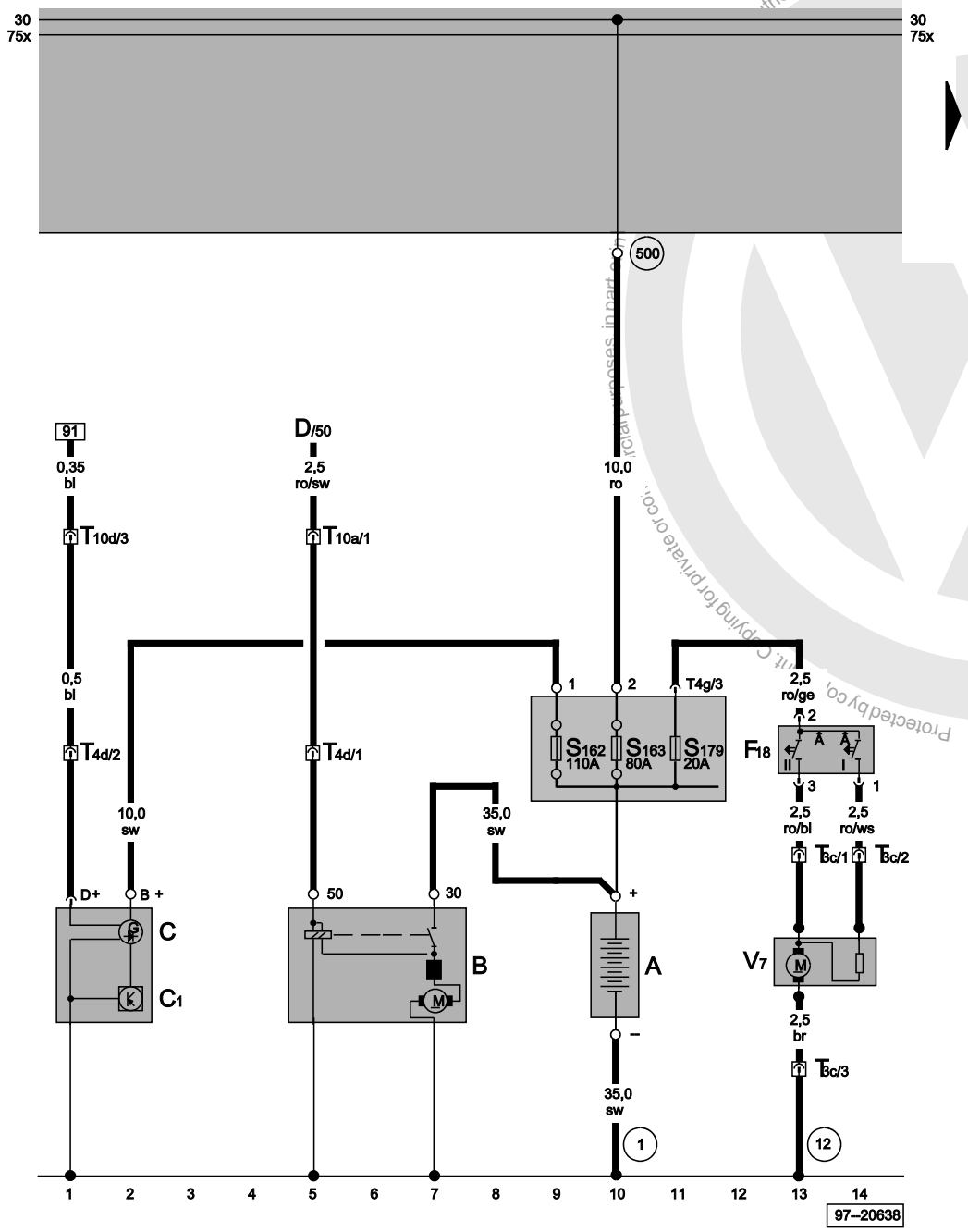

Battery, starter, alternator, radiator fan

A	Battery
B	Starter
C	Alternator
C1	Voltage regulator
D	Ignition/starter switch
F18	Thermal switch for radiator fan
S162	Fuse 1 (30), on battery fuse holder
S163	Fuse 2 (30), on battery fuse holder
S179	Fuse 7 (30), on battery fuse holder
T3c	3-pin connector, black, on radiator fan
T4d	4-pin connector, black, on gearbox
T4g	4-pin connector, black, near battery
T10a	10-pin connector, green, near relay station
T10d	10-pin connector, red, near relay station
V7	Radiator fan
(1)	Earth strap, battery - body
(12)	Earth point, on left in engine compartment
(500)	Screw connection 1 (30), on relay plate

ws	=	white
sw	=	black
ro	=	red
br	=	brown
gn	=	green
bl	=	blue
gr	=	grey
li	=	purple
ge	=	yellow
or	=	orange
rs	=	pink

Protected by copyright. Copying for private or commercial purposes, in part or in whole, is not permitted unless authorised by Volkswagen AG. Volkswagen AG does not guarantee or accept any liability with respect to the correctness of information in this document. Copyright by Volkswagen AG.
satelettronica

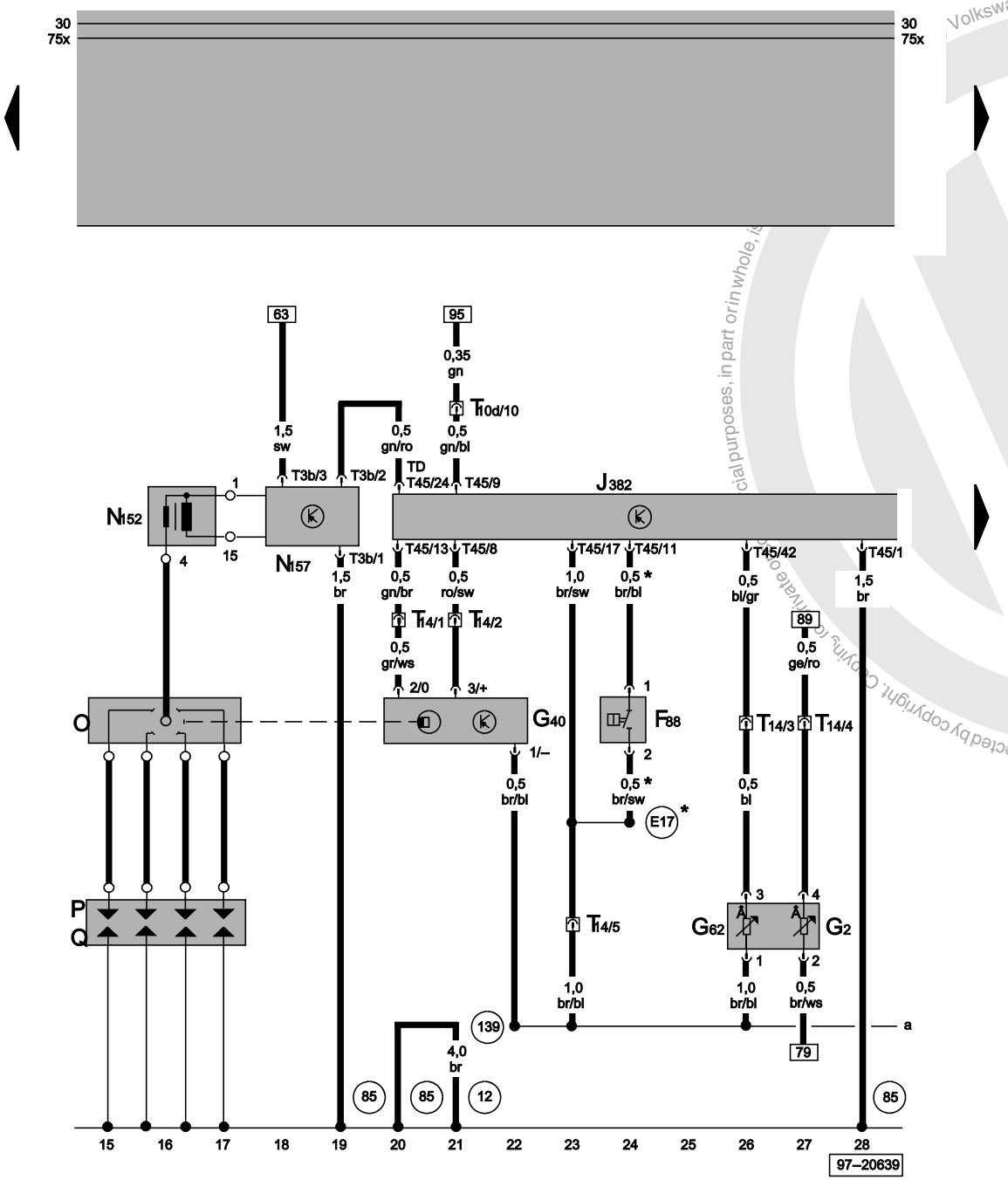

1AV injection system control unit, ignition system, Hall sender, coolant temperature sender, power assisted steering pressure switch

F88	Power assisted steering pressure switch
G2	Coolant temperature sender
G40	Hall sender (00515)
G62	Coolant temperature sender (00522)
J382	1AV injection system control unit, right in plenum chamber
N152	Ignition transformer
N157	Ignition transformer output stage
O	Ignition distributor
P	Spark plug connector
Q	Spark plug
T3b	3-pin connector, black, on output stage for ignition transformer
T10d	10-pin connector, red, near relay station
T14	14-pin connector, black, on engine
T45	45-pin connector, black
12	Earth point, on left in engine compartment
85	Earth connection 1, in engine compartment wiring harness
139	Earth connection (sender earth), in Motronic wiring harness
E17	Connection 2, in Motronic wiring harness
*	Only engine code AER

ws	=	white
sw	=	black
ro	=	red
br	=	brown
gn	=	green
bl	=	blue
gr	=	grey
li	=	purple
ge	=	yellow
or	=	orange
rs	=	pink

Volkswagen AG. Volkswagen AG. Protected by copyright. Copyright by Volkswagen AG.
satelettronica

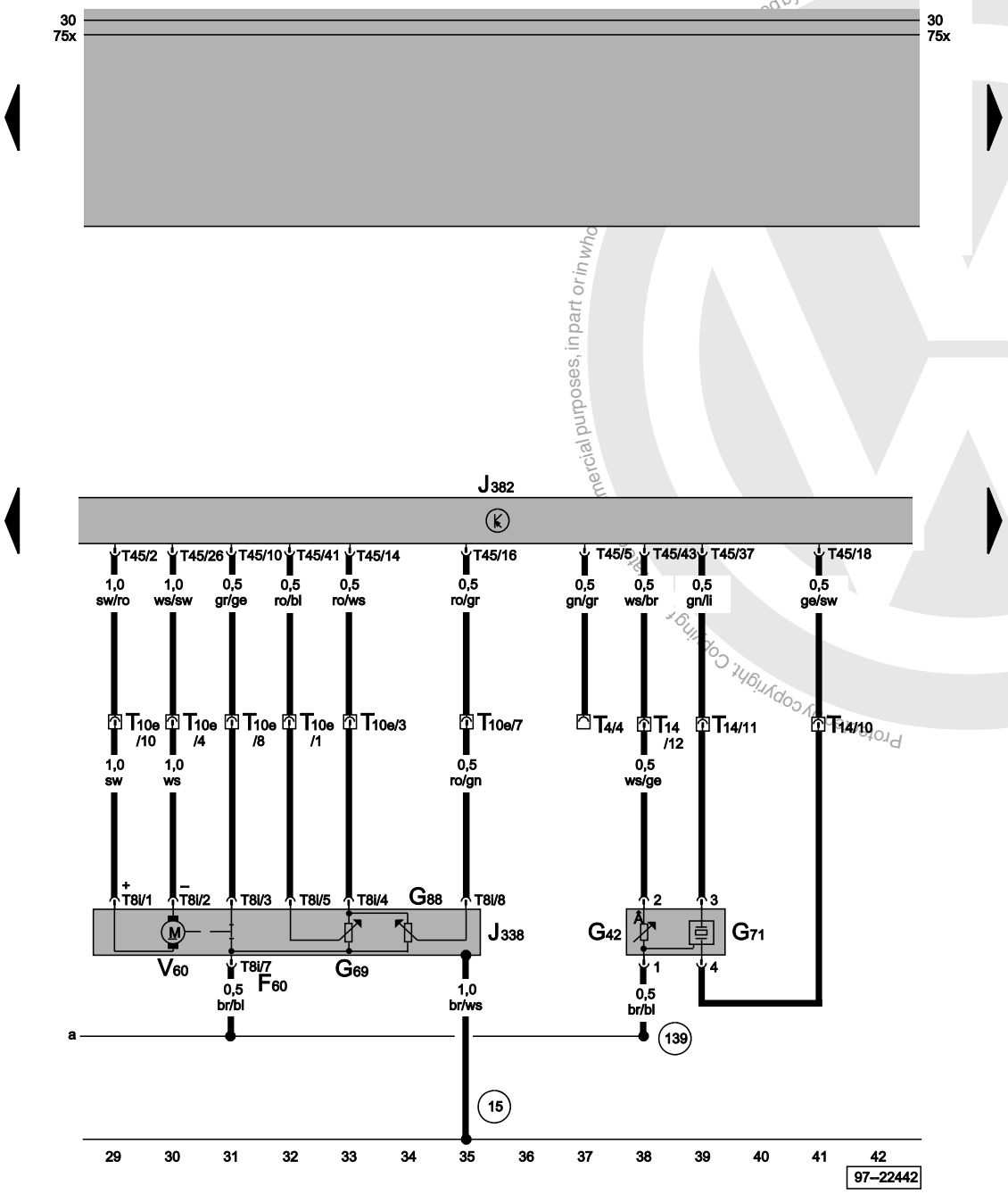

1AV injection system control unit, throttle valve module, intake air temperature sender, intake manifold pressure sender

F60	Idling speed switch (00516)
G42	Intake air temperature sender (00523)
G69	Throttle valve potentiometer (00518)
G71	Intake manifold pressure sender (00519)
G88	Throttle valve module potentiometer (00530)
J338	Throttle valve module, near intake manifold (01165)
J382	1AV injection system control unit, right in plenum chamber
T4	4-pin connector, black, on engine
T8h	8-pin connector, black, on throttle valve control module
T10e	10-pin connector, black, on engine
T14	14-pin connector, black, on engine
T45	45-pin connector, black
V60	Throttle valve module (00282)
15	Earth point, on cylinder head
139	Earth connection (sender earth), in Motronic wiring harness

ws	=	white
sw	=	black
ro	=	red
br	=	brown
gn	=	green
bl	=	blue
gr	=	grey
li	=	purple
ge	=	yellow
or	=	orange
rs	=	pink

Protected by copyright. Copyright by Volkswagen AG. Volkswagen AG does not guarantee accuracy, validity, completeness or timeliness of information in this document. Copyright by Volkswagen AG.
satelettronica

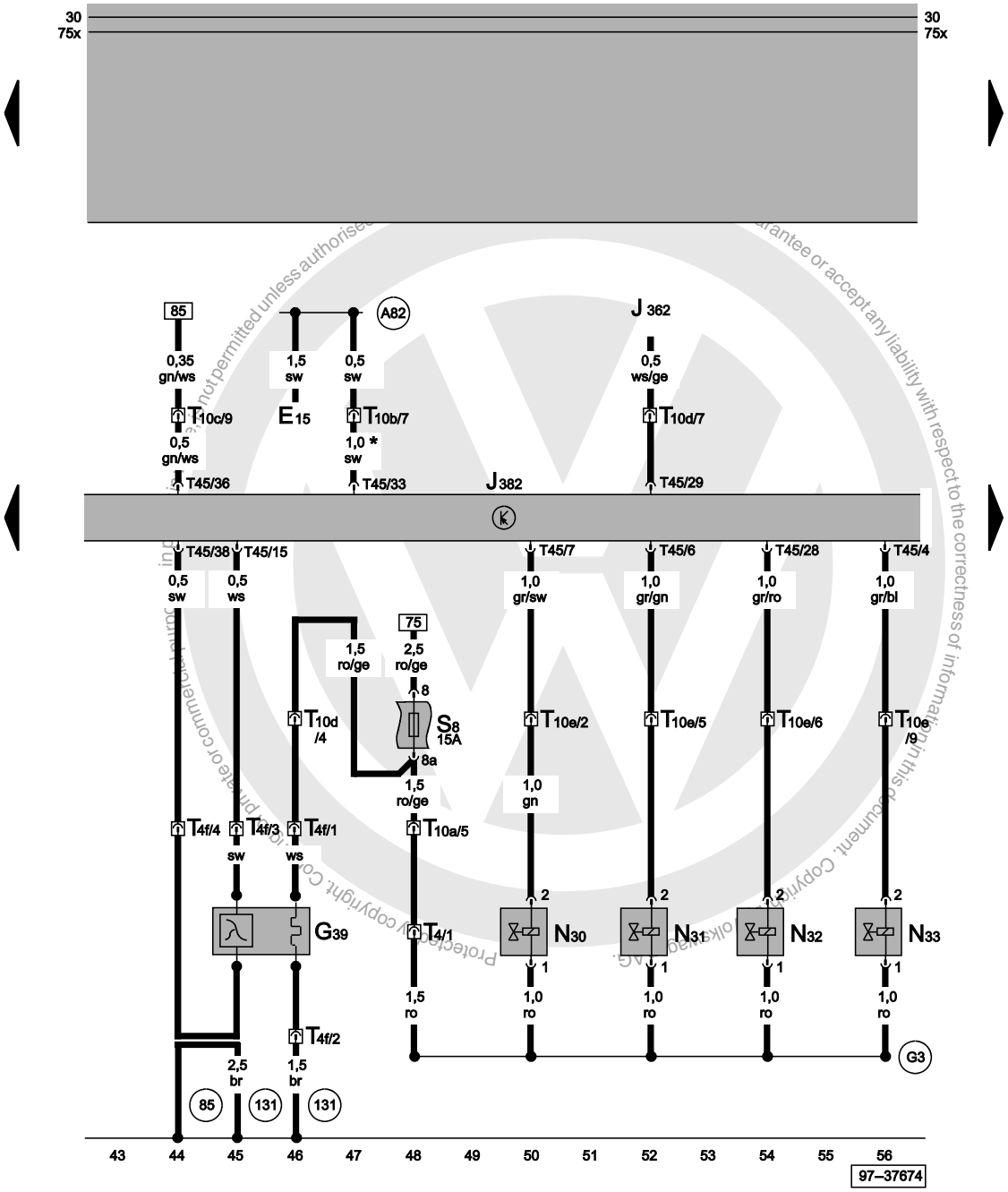

1AV injection system control unit, injectors, Lambda probe

E15	Heated rear window switch
G39	Lambda probe (00525)
J362	Immobilizer control unit, next to steering column
J382	1AV injection system control unit
N30	Injector, cylinder 1 (01249)
N31	Injector, cylinder 2 (01250)
N32	Injector, cylinder 3 (01251)
N33	Injector, cylinder 4 (01252)
S8	Fuse on fuse holder
T4	4-pin connector, black, on engine
T4f	4-pin connector, black, on gearbox
T8h	8-pin connector, black
T10a	10-pin connector, green, near relay station
T10b	10-pin connector, black, near relay station
T10c	10-pin connector, blue, near relay station
T10d	10-pin connector, red, near relay station
T10e	10-pin connector, black, on engine
T45	45-pin connector, black
85	Earth connection 1, in engine compartment wiring harness
131	Earth connection 3, in engine compartment wiring harness
A82	Connection (windscreen heater), in dash panel wiring harness
G3	Positive connection in cable sleeve - injectors
*	Only engine code AER

ws	=	white
sw	=	black
ro	=	red
br	=	brown
gn	=	green
bl	=	blue
gr	=	grey
li	=	purple
ge	=	yellow
or	=	orange
rs	=	pink

satelettronica

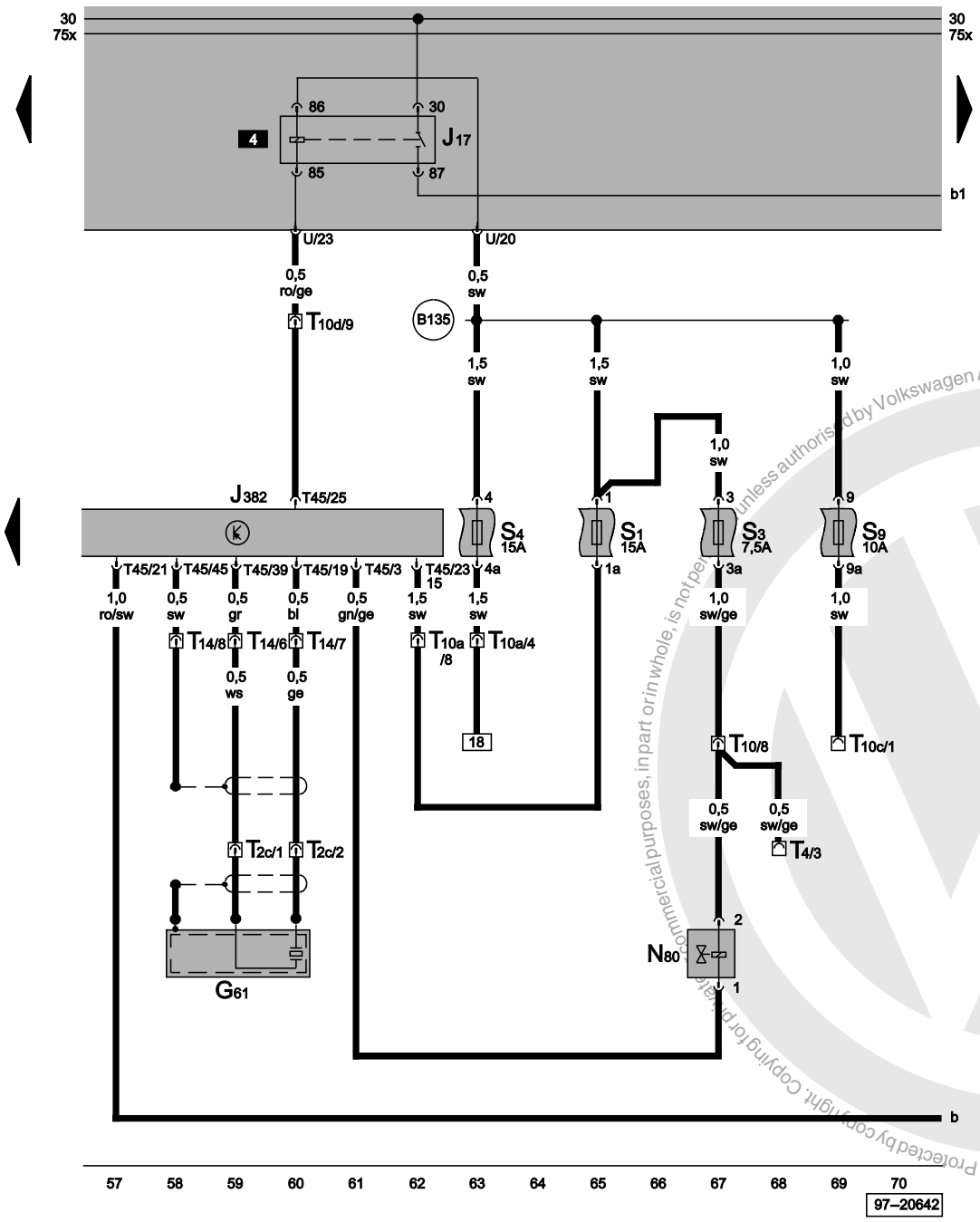

1AV injection system control unit, knock sensor, exhaust gas recirculation frequency valve, activated charcoal filter system

G61	Knock sensor 1 (00524)
J17	Fuel pump relay(01259)
J382	1AV injection system control unit, right in plenum chamber
N80	Activated charcoal filter system solenoid valve 1
S1	Fuse on fuse holder
S3	Fuse on fuse holder
S4	Fuse on fuse holder
S9	Fuse on fuse holder
T2c	2-pin connector, black, on engine
T4	4-pin connector, black, on engine
T10	10-pin connector, white, near relay station
T10a	10-pin connector, green, near relay station
T10c	10-pin connector, blue, near relay station
T10d	10-pin connector, red, near relay station
T14	14-pin connector, black, on engine
T45	45-pin connector, black
B135	Connection 1 (15a), in interior wiring harness

ws	=	white
sw	=	black
ro	=	red
br	=	brown
gn	=	green
bl	=	blue
gr	=	grey
li	=	purple
ge	=	yellow
or	=	orange
rs	=	pink

Protected by copyright. Copying for private or commercial purposes, in part or in whole, is not permitted unless authorised by Volkswagen AG. Volkswagen AG does not guarantee or accept any liability with respect to the correctness of information in this document. Copyright by Volkswagen AG.

satelettronica

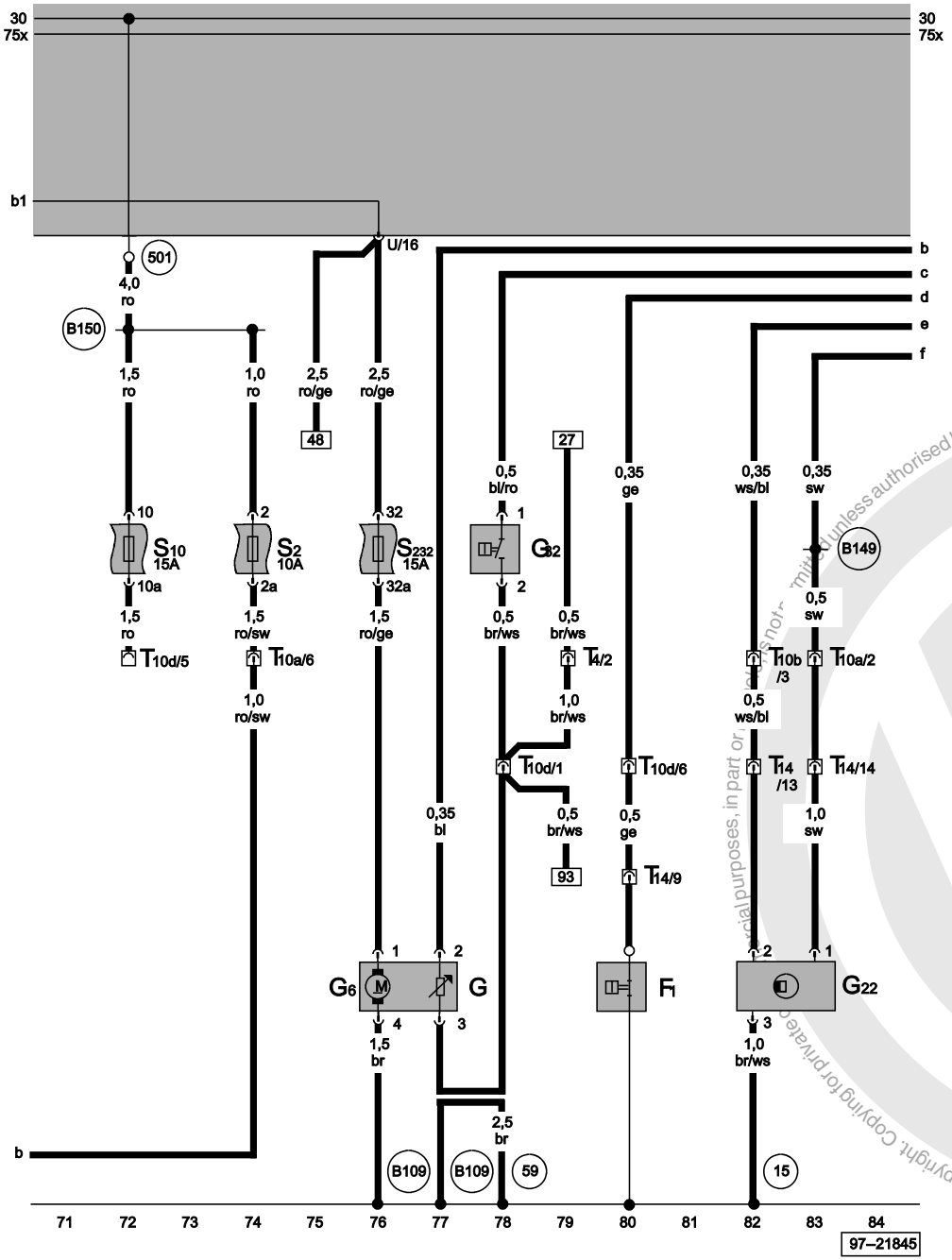

Speedometer sender, coolant shortage indicator sender, fuel supply

F1	Oil pressure switch
G	Fuel gauge sender
G6	Fuel pump
G22	Speedometer sender (Hall sender on gearbox)
G32	Coolant shortage indicator sender
S2	Fuse on fuse holder
S10	Fuse on fuse holder
S232	Fuse on fuse holder
T4	4-pin connector, black, on engine
T10a	10-pin connector, green, near relay station
T10b	10-pin connector, black, near relay station
T10d	10-pin connector, red, near relay station
T14	14-pin connector, black, on engine
15	Earth point, on cylinder head
59	Earth point, near left tail light
501	Screw connection 2 (30), on relay plate
B109	Earth connection, in rear left interior wiring harness
B149	Positive connection 2 (15a), in interior wiring harness
B150	Positive connection 2 (30a), in interior wiring harness

ws	=	white
sw	=	black
ro	=	red
br	=	brown
gn	=	green
bl	=	blue
gr	=	grey
li	=	purple
ge	=	yellow
or	=	orange
rs	=	pink

Protected by copyright. Copying for private or commercial purposes, in part or in whole, is not permitted unless authorised by Volkswagen AG. Volkswagen AG does not guarantee or accept any liability with respect to the correctness of information in this document. Copyright by Volkswagen AG.

satelettronica

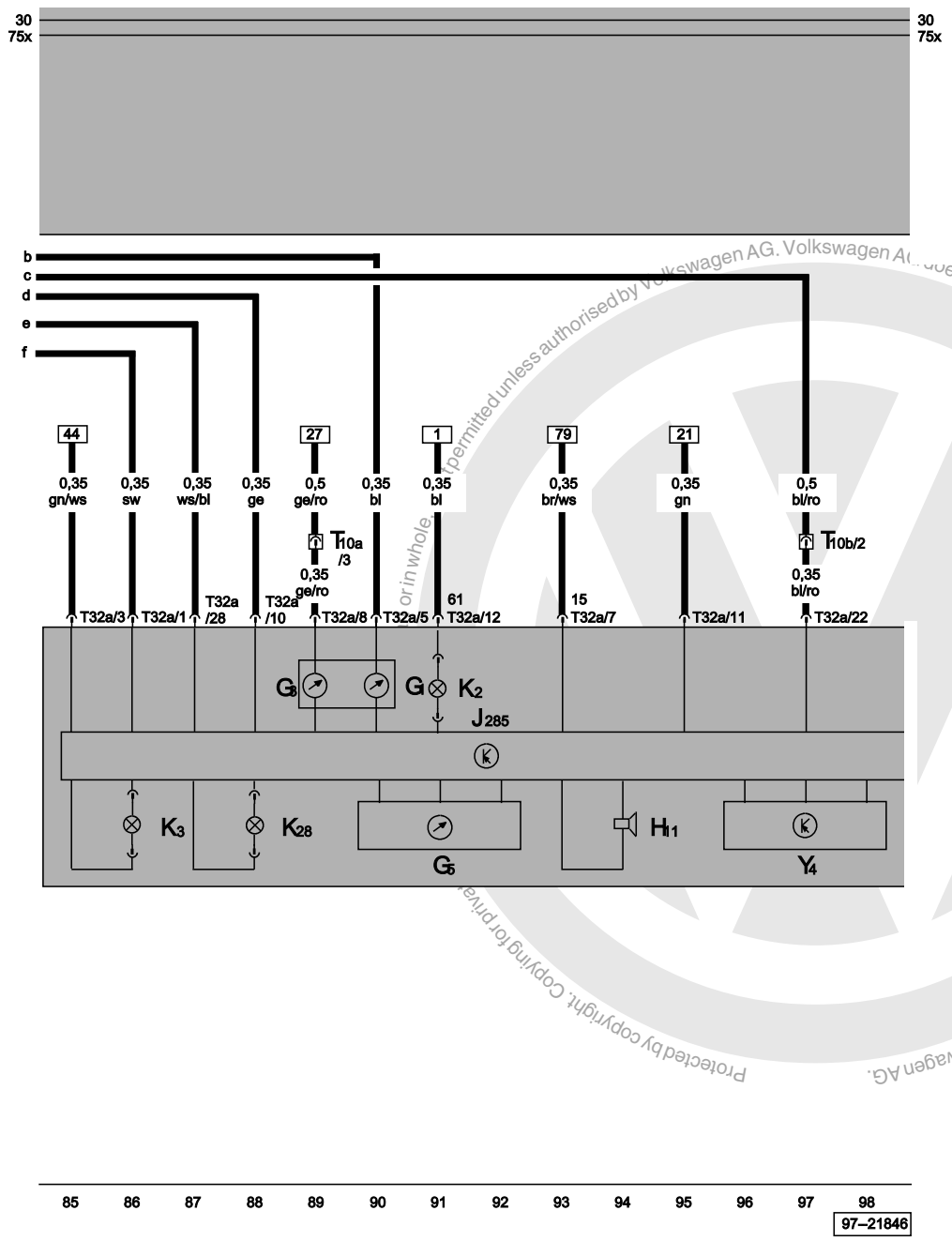

Dash panel insert, alternator warning lamp, fuel gauge, coolant shortage and coolant temperature indicator, optical and acoustic oil pressure warning, odometer

G1	Fuel gauge
G3	Coolant temperature gauge
G5	Rev. counter
H11	Oil pressure warning buzzer
J285	Control unit with display in dash panel insert
K2	Alternator warning lamp
K3	Oil pressure warning lamp
K28	Coolant temperature/coolant shortage warning lamp
T10a	10-pin connector, green, near relay station
T10b	10-pin connector, black, near relay station
T32a	32-pin connector, blue, on dash panel insert
Y4	Trip counter

ws	=	white
sw	=	black
ro	=	red
br	=	brown
gn	=	green
bl	=	blue
gr	=	grey
li	=	purple
ge	=	yellow
or	=	orange
rs	=	pink

Protected by copyright. Copying for private or in whole or in part is not permitted unless authorised by Volkswagen AG. Volkswagen AG does not guarantee or accept any liability with respect to the correctness of information in this document. Copyright by Volkswagen AG.

satelettronica

1.0 litre/37 kW Motronic, engine codes AER, ALL
From May 1997

1.4 litre/44 kW Motronic, engine codes AEX

1.6 litre/55 kW 1AV, engine codes AEE
From May 1997

1.4 litre/40 kW Motronic, engine codes ANX
From May 1997

1.4 litre/44 kW Motronic, engine codes APQ
From January 1998

1.6 litre/55 kW 1AV, engine codes AEE, from May 1997

For alternatives to relay and fuse positions as well as multi-pin connector wiring - see "Fitting locations" section.

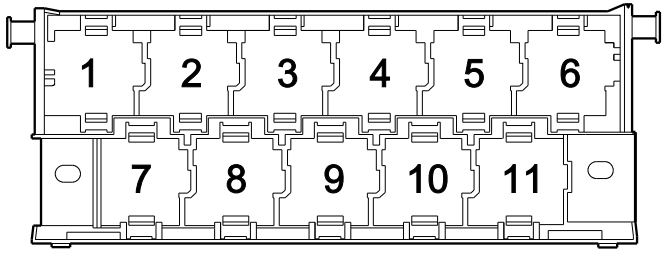

97-22850

Fuse colours

30 A - green
25 A - white
20 A - yellow
15 A - blue
10 A - red
7.5 A - brown
5 A - beige
3 A - lilac

Protected by copyright. Copying for private or commercial purposes, in part or in whole, is not permitted unless authorised by Volkswagen AG. Volkswagen AG does not guarantee or accept any liability with respect to the correctness of information in this document. Copyright by Volkswagen AG.

satelettronica

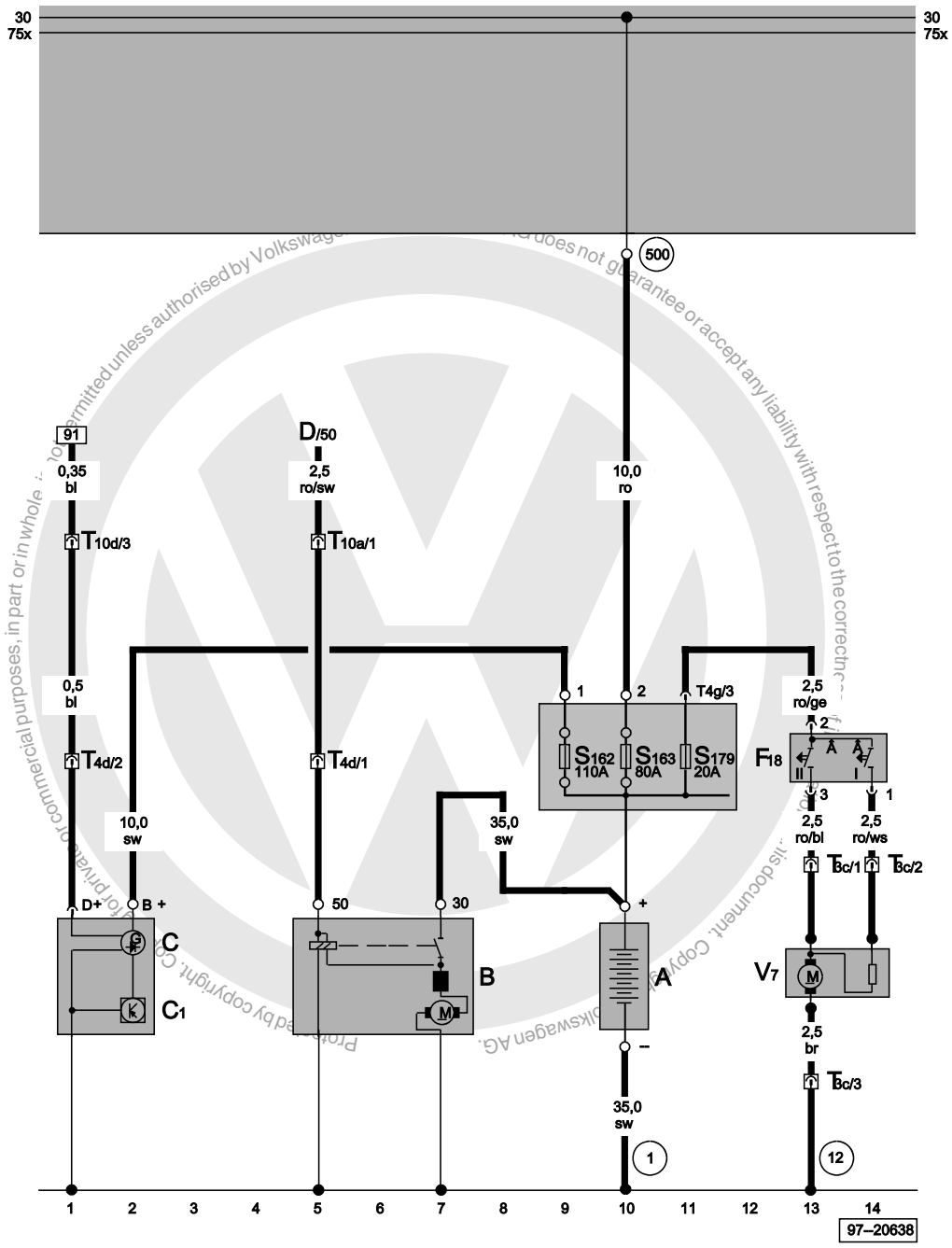

Battery, starter, alternator, radiator fan

A	Battery
B	Starter
C	Alternator
C1	Voltage regulator
D	Ignition/starter switch
F18	Radiator fan thermo-switch
S162	Fuse -1- (30), in fuse box/battery
S163	Fuse -2- (30), in fuse box/battery
S179	Fuse -7- (30), in fuse box/battery
T3c	3-pin connector, black, on radiator fan
T4d	4-pin connector, black, on gearbox
T4g	4-pin connector, black, near battery
T10a	10-pin connector, green, near relay station
T10d	10-pin connector, red, near relay station
V7	Radiator fan
(1)	Earth strap, battery - body
(12)	Earth point, in engine compartment, left
(500)	Screw connection -1- (30), on relay plate

ws	=	white
sw	=	black
ro	=	red
br	=	brown
gn	=	green
bl	=	blue
gr	=	grey
li	=	purple
ge	=	yellow
or	=	orange
rs	=	pink

satelettronica

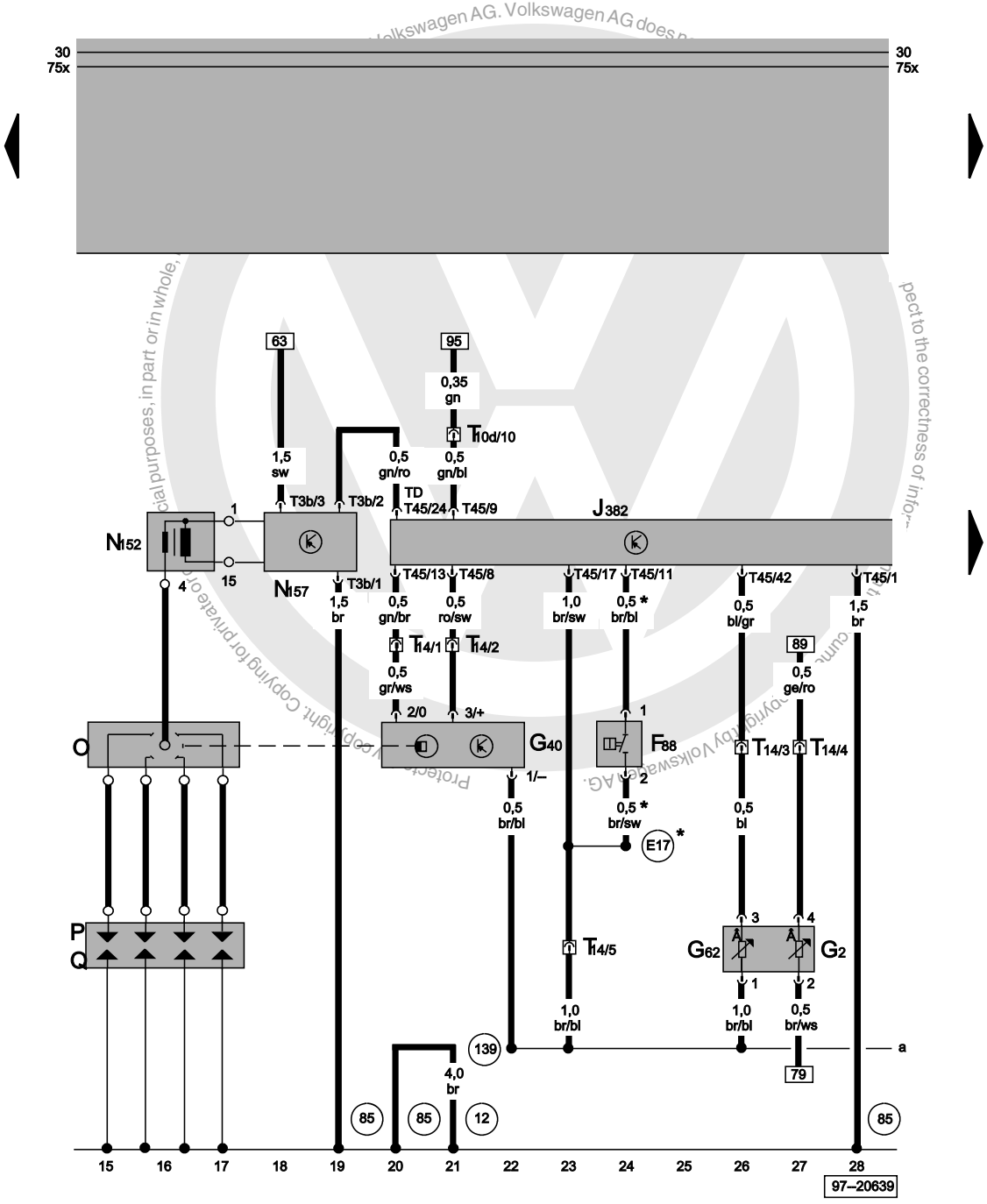

1AV control unit (injection system), ignition system, Hall sender, coolant temperature sender, power assisted steering pressure switch

F88	Power assisted steering pressure switch
G2	Coolant temperature sender
G40	Hall sender
G62	Coolant temperature sender
J382	1AV control unit (injection system), right in plenum chamber
N152	Ignition transformer
N157	Ignition transformer output stage
O	Ignition distributor
P	Spark plug connector
Q	Flame plug
T3b	3-pin connector, black, on ignition transformer output stage
T10d	10-pin connector, red, near relay station
T14	14-pin connector, black, on engine
T45	45-pin connector, black
12	Earth point, in engine compartment, left
85	Earth connection -1-, in engine compartment wiring harness
139	Earth connection (sender earth), in Motronic wiring harness
E17	Connection -2-, in Motronic wiring harness
*	For engine code AER only

ws	=	white
sw	=	black
ro	=	red
br	=	brown
gn	=	green
bl	=	blue
gr	=	grey
li	=	purple
ge	=	yellow
or	=	orange
rs	=	pink

satelettronica

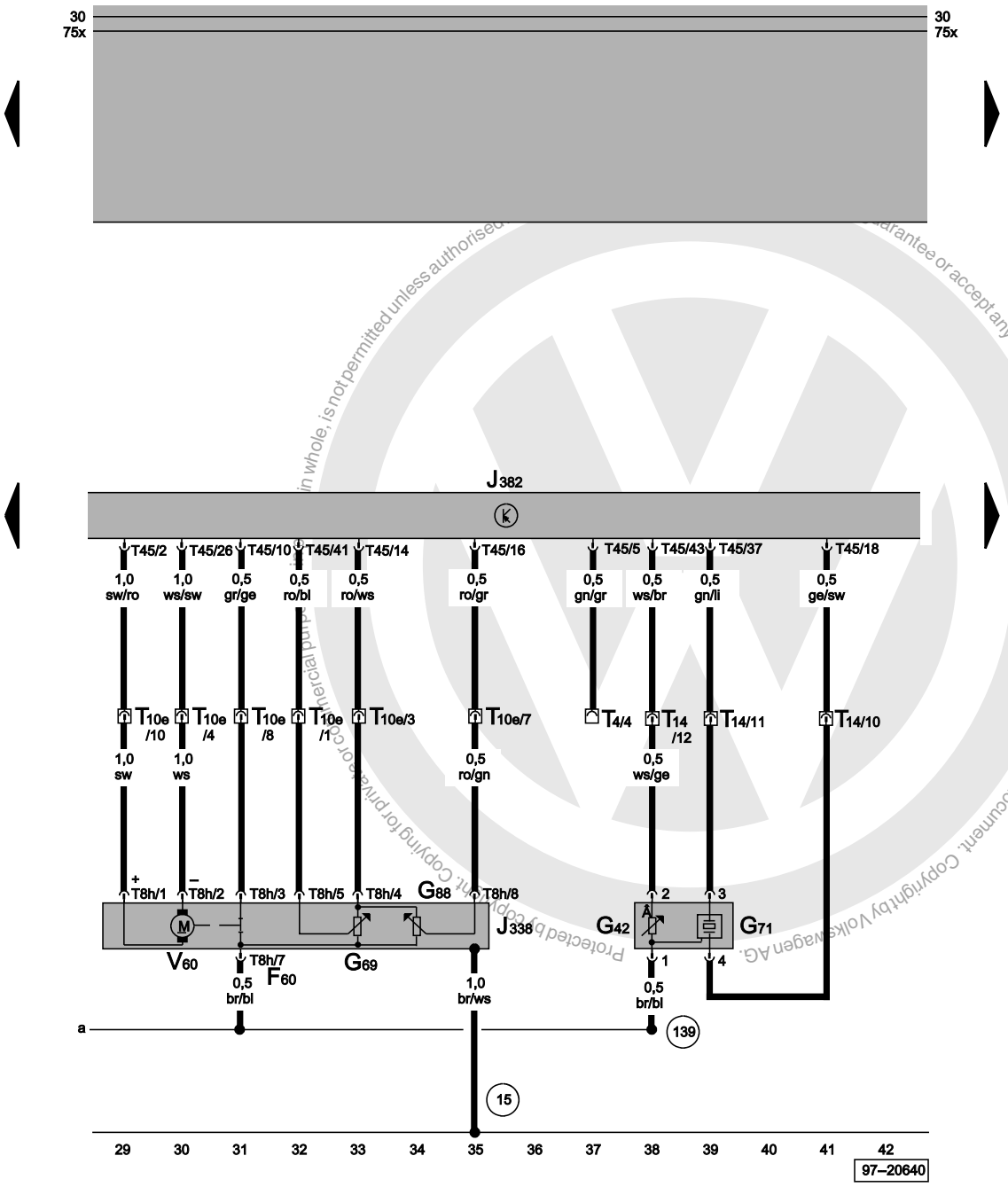

1AV control unit (injection system), throttle valve control part, intake air temperature sender, intake manifold pressure sender

F60	Idling switch
G42	Intake air temperature sender
G69	Throttle valve potentiometer
G71	Intake manifold pressure sender
G88	Throttle valve positioner potentiometer
J338	Throttle valve control unit, near intake manifold
J382	1AV control unit (injection system), right in plenum chamber
T4	4-pin connector, black, on engine
T8h	8-pin connector, black, on throttle valve control unit
T10e	10-pin connector, black, on engine
T14	14-pin connector, black, on engine
T45	45-pin connector, black
V60	Throttle valve positioner
15	Earth point, on cylinder head
139	Earth connection (sender earth), in Motronic wiring harness

ws	=	white
sw	=	black
ro	=	red
br	=	brown
gn	=	green
bl	=	blue
gr	=	grey
li	=	purple
ge	=	yellow
or	=	orange
rs	=	pink

Protected by copyright. Copying for private or commercial purposes, in whole, is not permitted unless authorised by Volkswagen AG. Volkswagen AG does not guarantee or accept any liability with respect to the correctness of information in this document. Copyright by Volkswagen AG.

satelettronica

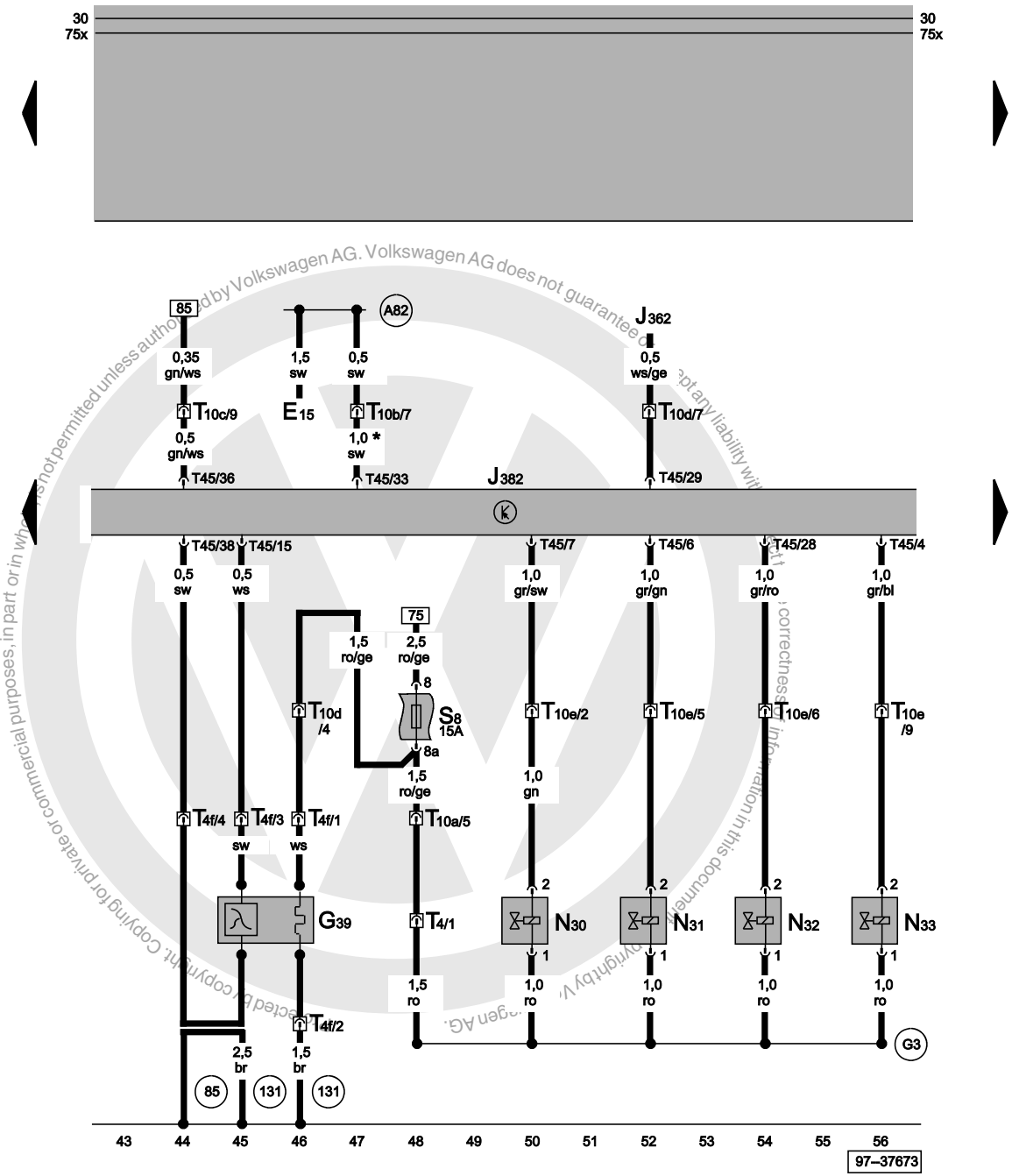

1AV control unit (injection system), injectors, lambda probe

E15	Heated rear window switch
G39	Lambda probe
J362	Immobilizer control unit, next to steering column
J382	1AV control unit (injection system)
N30	Injector, cylinder 1
N31	Injector, cylinder 2
N32	Injector, cylinder 3
N33	Injector, cylinder 4
S8	Fuse in fuse holder
T4	4-pin connector, black, on engine
T4f	4-pin connector, black, on gearbox
T10a	10-pin connector, green, near relay station
T10b	10-pin connector, black, near relay station
T10c	10-pin connector, blue, near relay station
T10d	10-pin connector, red, near relay station
T10e	10-pin connector, black, on engine
T45	45-pin connector, black
85	Earth connection 1, in engine compartment wiring harness
131	Earth connection 3, in engine compartment wiring harness
A82	Connection (windscreen heater), in dash panel wiring harness
G3	Positive connection in cable sleeve - injectors
*	Only applies to engine code AER

ws	=	white
sw	=	black
ro	=	red
br	=	brown
gn	=	green
bl	=	blue
gr	=	grey
li	=	purple
ge	=	yellow
or	=	orange
rs	=	pink

Reproduced by copyright. Copying for private or commercial purposes, in part or in whole, is not permitted unless authorised by Volkswagen AG. Volkswagen AG does not guarantee or accept any liability with respect to the correctness of information in this document. Copyright by Volkswagen AG.

satelettronica

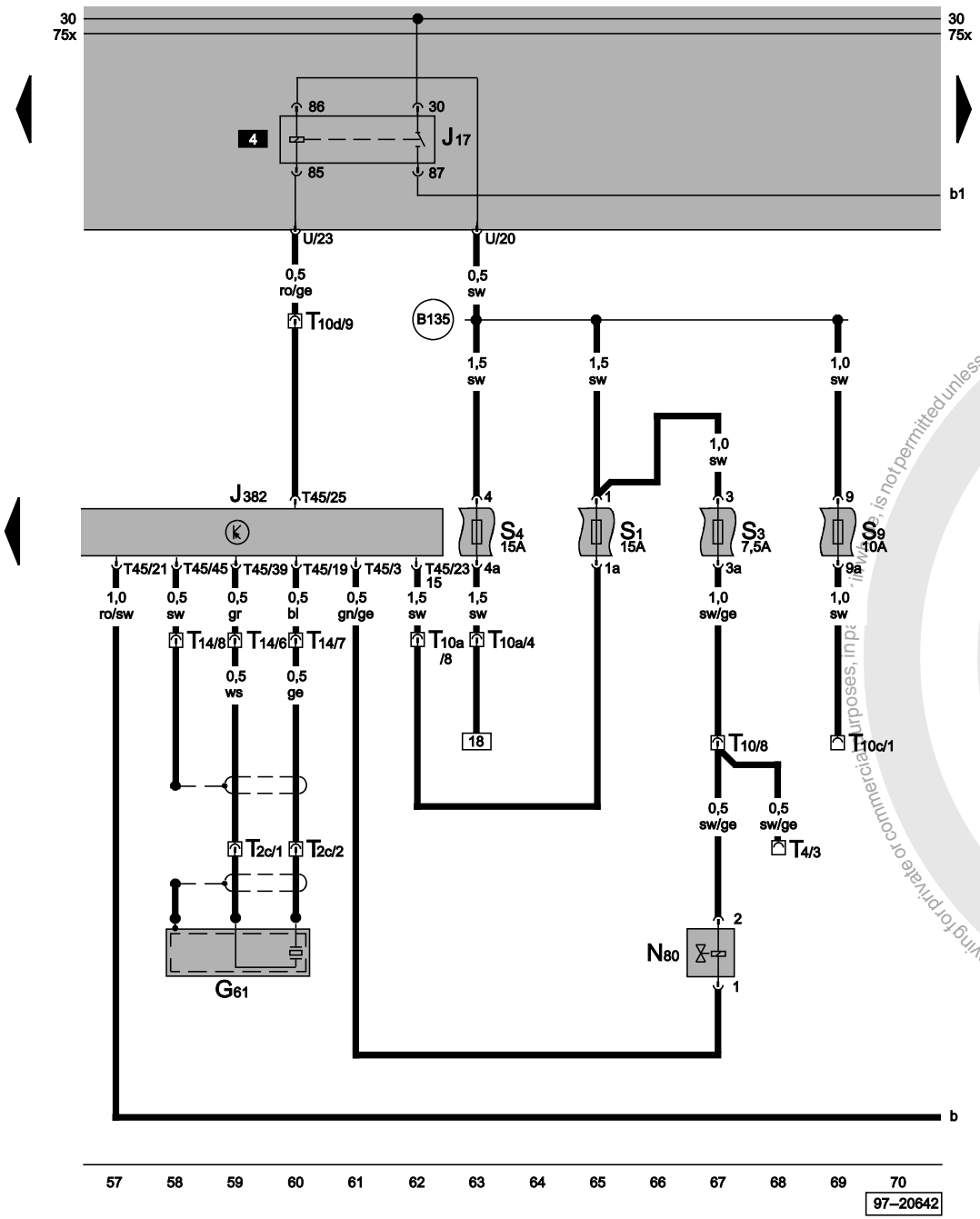

1AV control unit (injection system), knock sensor, exhaust gas recirculation pulsed valve, activated charcoal filter system

G61	Knock sensor I
J17	Fuel pump relay (01259)
J382	1AV control unit (injection system), right in plenum chamber
N80	Activated charcoal filter system solenoid valve I
S1	Fuse in relay plate fuse box
S3	Fuse in relay plate fuse box
S4	Fuse in relay plate fuse box
S9	Fuse in relay plate fuse box
T2c	2-pin connector, on engine
T4	4-pin connector, black, on engine
T10	10-pin connector, white, near relay station
T10a	10-pin connector, green, near relay station
T10c	10-pin connector, blue, near relay station
T10d	10-pin connector, red, near relay station
T14	14-pin connector, black, on engine
T45	45-pin connector, black
(B135)	Connection (15a), in interior wiring harness

ws	=	white
sw	=	black
ro	=	red
br	=	brown
gn	=	green
bl	=	blue
gr	=	grey
li	=	purple
ge	=	yellow
or	=	orange
rs	=	pink

Protected by copyright. Copying for private or commercial purposes, in part or in whole, is not permitted unless authorised by Volkswagen AG. Volkswagen AG does not guarantee or accept any liability with respect to the correctness of information in this document. Copyright by Volkswagen AG.
satelettronica

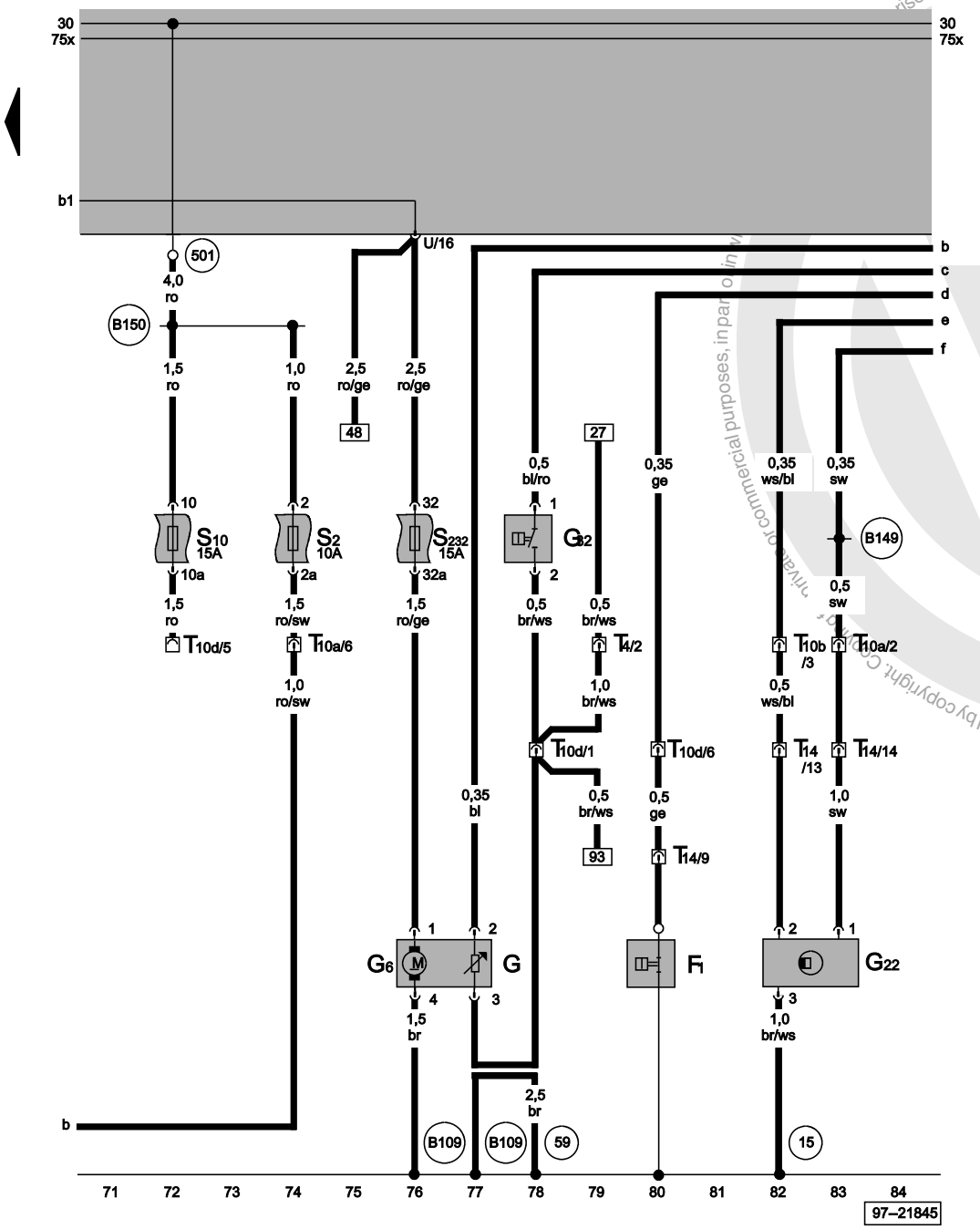

Speedometer sender, coolant shortage indicator sender, fuel supply

F1	Oil pressure switch
G	Fuel gauge sender
G6	Fuel pump (pre-supply pump)
G22	Speedometer sender (Hall sender on gearbox)
G32	Coolant shortage indicator sender
S2	Fuse in relay plate fuse box
S10	Fuse in relay plate fuse box
S232	Fuse in fuse holder
T4	4-pin connector, black, on engine
T10a	10-pin connector, green, near relay station
T10b	10-pin connector, black, near relay station
T10d	10-pin connector, red, near relay station
T14	14-pin connector, black, on engine
15	Earth point, on cylinder head
59	Earth point, near left-hand tail light
501	Screw connection -2- (30), on relay plate
B109	Earth connection, in rear left interior wiring harness
B149	Positive connection -2- (15a), in interior wiring harness
B150	Positive connection -2- (30a), in interior wiring harness

ws	=	white
sw	=	black
ro	=	red
br	=	brown
gn	=	green
bl	=	blue
gr	=	grey
li	=	purple
ge	=	yellow
or	=	orange
rs	=	pink

Protected by copyright. Copying for private or commercial purposes, in part or in whole, is not permitted unless authorised by Volkswagen AG. Volkswagen AG does not guarantee or accept any liability with respect to the correctness of information in this document. Copyright by Volkswagen AG.
satelettronica

Dash panel insert, alternator warning lamp, fuel gauge, coolant shortage and coolant temperature indicator, optical and acoustic oil pressure warning, odometer

G1	Fuel gauge
G3	Coolant temperature gauge
G5	Rev. counter
H11	Oil pressure warning buzzer
J285	Control unit with display in dash panel insert
K2	Alternator warning lamp
K3	Oil pressure warning lamp
K28	Coolant temperature/coolant shortage warning lamp
T10a	10-pin connector, green, near relay station
T10b	10-pin connector, black, near relay station
T32a	32-pin connector, blue, on dash panel insert
Y4	Odometer display

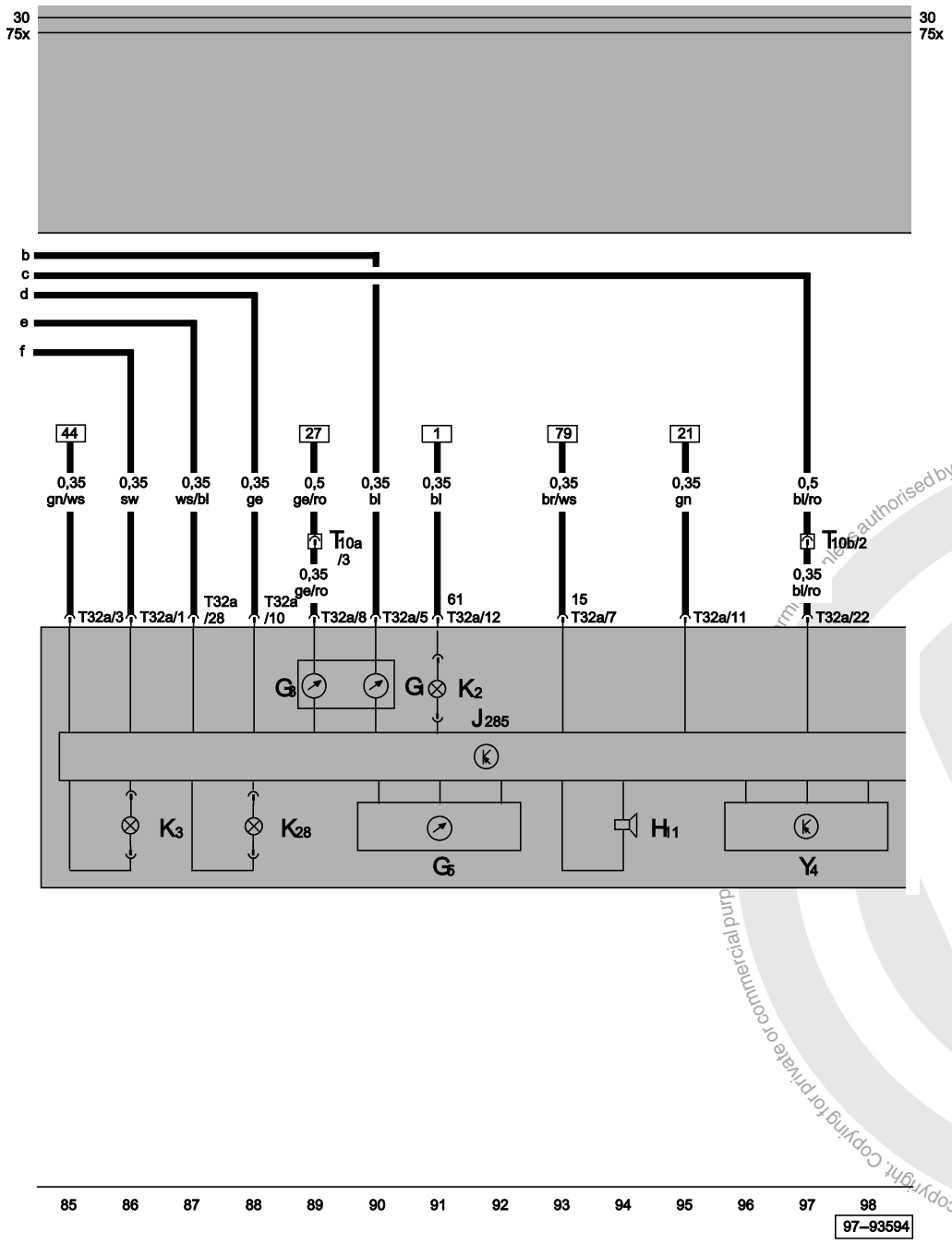

ws	=	white
sw	=	black
ro	=	red
br	=	brown
gn	=	green
bl	=	blue
gr	=	grey
li	=	purple
ge	=	yellow
or	=	orange
rs	=	pink

Protected by copyright. Copying for private or commercial purposes, in any form or medium without permission of the owner is prohibited. Information contained in this document is compiled with the greatest care, but is not authorised by Volkswagen AG. Volkswagen AG does not guarantee or accept any liability with respect to the correctness of information in this document. Copyright by Volkswagen AG.

satelettronica

1.6 l/88 kW - 4CV, engine codes AJV

From August 1998

For alternatives to relay and fuse positions as well as multi-pin connector wiring - see "Fitting locations" section.

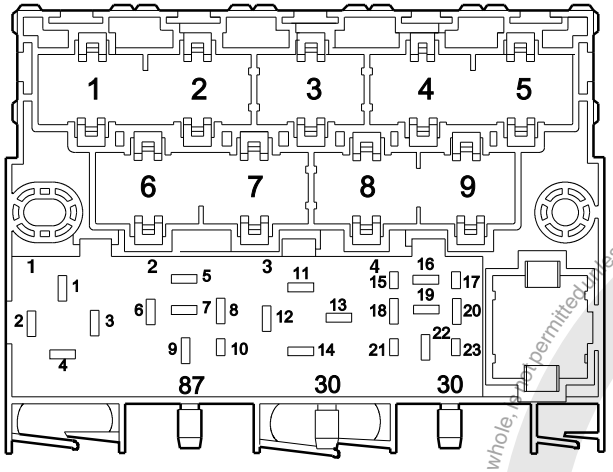

97--20672

4 - Fuel pump relay (167)

Note!

- *The number in brackets behind the part designation denotes the control number on the housing.*

Fuse colours

30 A - green
25 A - white
20 A - yellow
15 A - blue
10 A - red
7.5 A - brown
5 A - beige
3 A - purple

Protected by copyright. Copying for private or commercial purposes, in part or in whole, is not permitted unless authorised by Volkswagen AG. Volkswagen AG does not guarantee or accept any liability with respect to the correctness of information in this document. Copyright by Volkswagen AG.

satelettronica

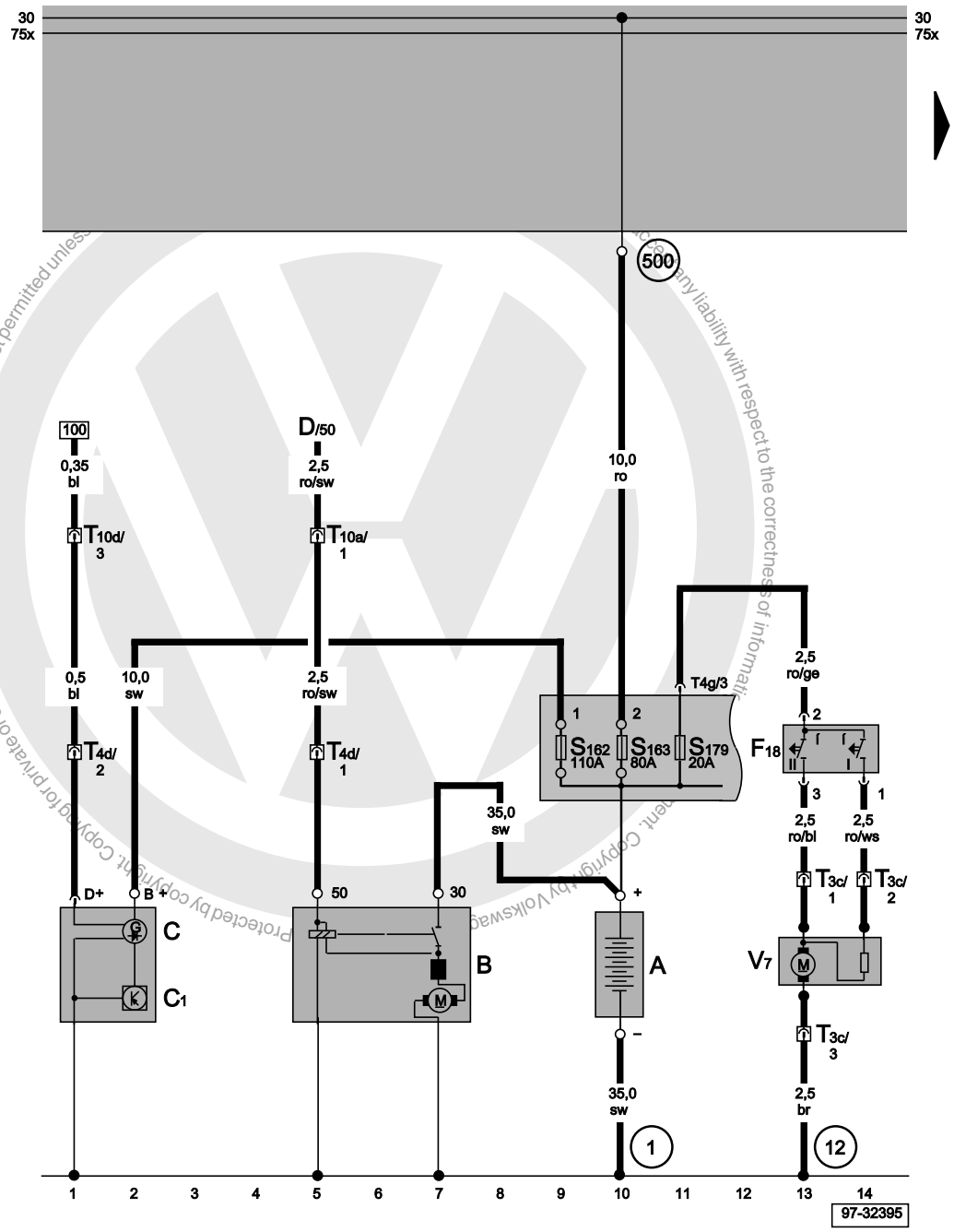

Battery, starter, alternator, radiator fan, radiator fan thermo-switch

A	Battery
B	Starter
C	Alternator
C1	Voltage regulator
D	Ignition/starter switch
F18	Radiator fan thermo-switch
S162	Fuse -1- (30), in fuse box/battery
S163	Fuse -2- (30), in fuse box/battery
S179	Fuse -7- (30), in fuse box/battery
T3c	3-pin connector, black, on radiator fan
T4d	4-pin connector, black, on gearbox
T4g	4-pin connector, black, near battery
T10a	10-pin connector, green, near relay station
T10d	10-pin connector, red, near relay station
V7	Radiator fan
1	Earth strap, battery - body
12	Earth point, in engine compartment, left
500	Screw connection -1- (30), on relay plate

ws	=	white
sw	=	black
ro	=	red
br	=	brown
gn	=	green
bl	=	blue
gr	=	grey
li	=	purple
ge	=	yellow
or	=	orange
rs	=	pink

Protected by copyright. Copying for private or commercial purposes, in part or in whole, is not permitted unless authorised by Volkswagen. Copyright by Volkswagen. No liability with respect to the correctness of information.
satelettronica

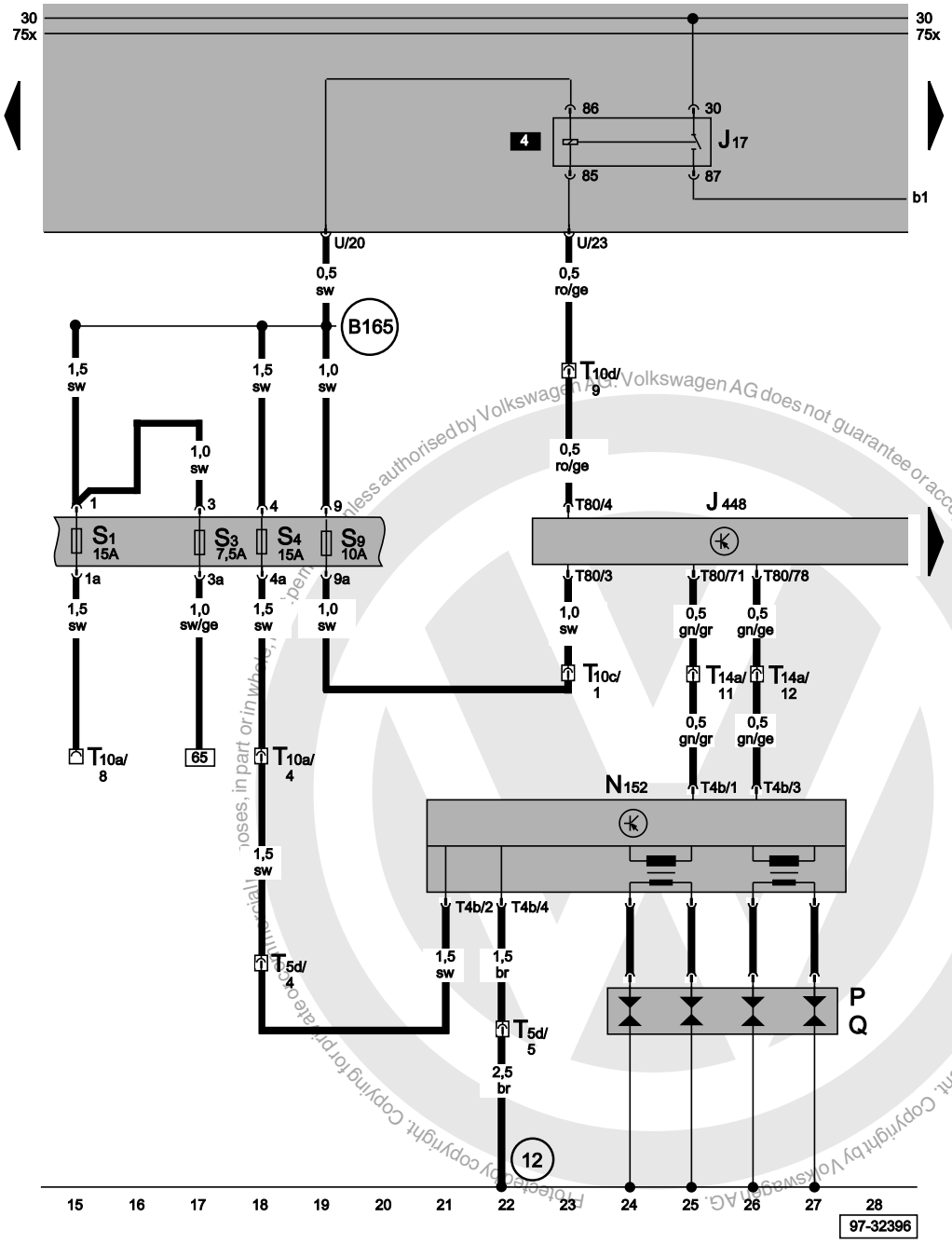

4CV control unit (injection system), ignition system, fuel pump relay

J17	Fuel pump relay
J448	4AV/4CV (injection system) control unit
N152	Ignition transformer
P	Spark plug connector
Q	Spark plugs
S1	Fuse in fuse box/relay plate
S3	Fuse in fuse box/relay plate
S4	Fuse in fuse box/relay plate
S9	Fuses in fuse box/relay plate
T4b	4-pin connector
T5d	5-pin connector, black, on engine
T10a	10-pin connector, green, near relay station
T10c	10-pin connector, blue, near relay station
T10d	10-pin connector, red, near relay station
T14a	14-pin connector, black, on engine
T80	80-pin connector
12	Earth point, in engine compartment, left
B165	Positive (+) connection -2- (15), in interior wiring harness

ws	=	white
sw	=	black
ro	=	red
br	=	brown
gn	=	green
bl	=	blue
gr	=	grey
li	=	purple
ge	=	yellow
or	=	orange
rs	=	pink

satelettronica

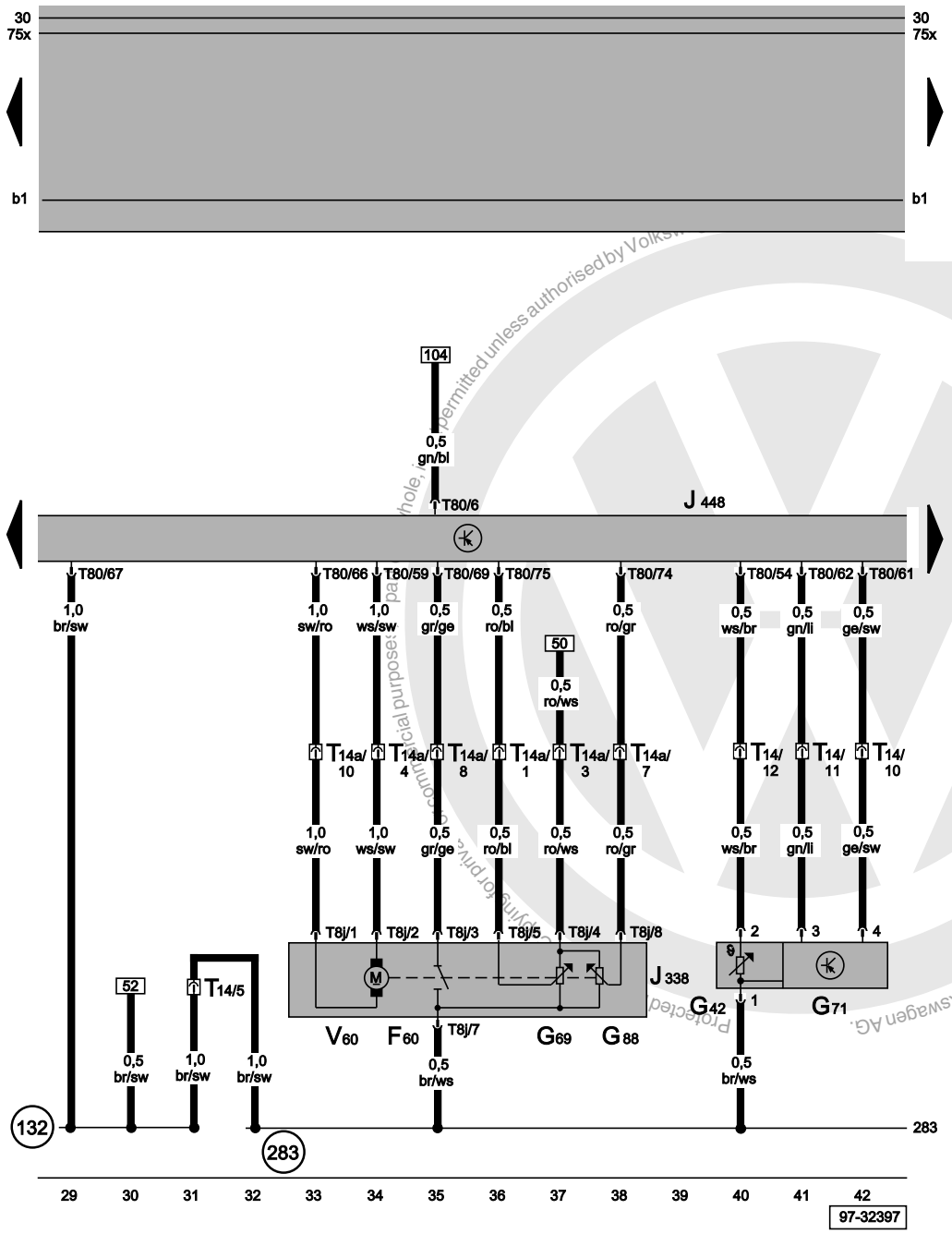

4CV control unit (injection system), throttle valve control unit, intake air temperature sender, intake manifold pressure sender

F60	Idling switch
G42	Intake air temperature sender
G69	Throttle valve potentiometer
G71	Intake manifold pressure sender
G88	Throttle valve positioner potentiometer
J338	Throttle valve control unit, near intake manifold
J448	4AV/4CV (injection system) control unit
T8j	8-pin connector, black
T14	14-pin connector, black, on engine
T14a	14-pin connector, brown, on engine
T80	80-pin connector
V60	Throttle valve positioner
132	Earth connection -3-, in engine compartment wiring harness
283	Earth connection -2-, in engine prewiring wiring harness

ws	=	white
sw	=	black
ro	=	red
br	=	brown
gn	=	green
bl	=	blue
gr	=	grey
li	=	purple
ge	=	yellow
or	=	orange
rs	=	pink

satelettronica

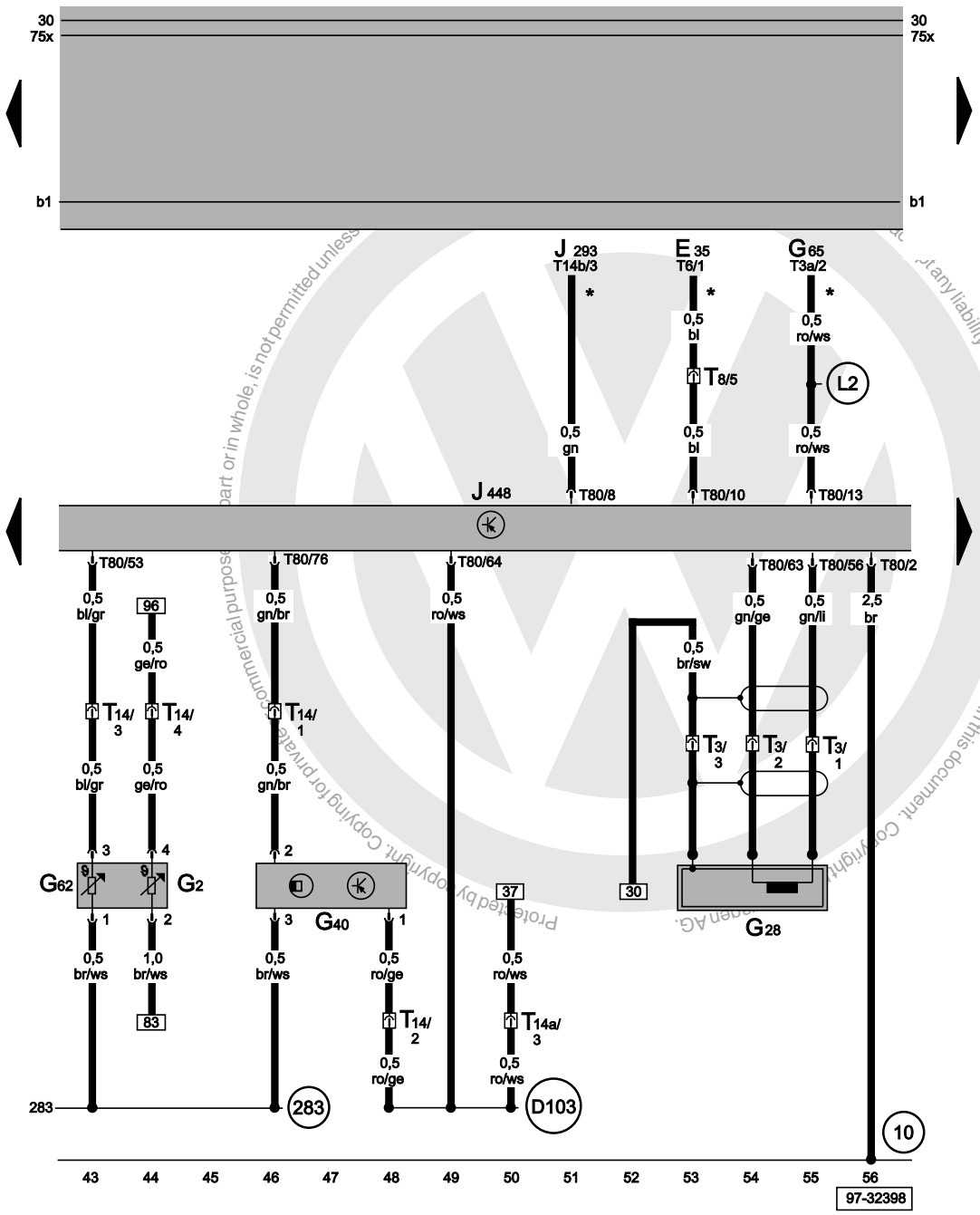

4CV control unit (injection system), engine speed sender, Hall sender

E35	Air conditioner switch
G2	Coolant temperature sender
G28	Engine speed sender
G40	Hall sender
G62	Coolant temperature sender
G65	High pressure sender
J293	Radiator fan control unit
J448	4AV/4CV (injection system) control unit
T3	3-pin connector, on cylinder head, left
T3a	3-pin connector
T6	6-pin connector
T8	8-pin connector
T14	14-pin connector, black, on engine
T14a	14-pin connector, brown, on engine
T14b	14-pin connector
T80	80-pin connector
10	Earth point, in plenum chamber
283	Earth connection -2-, in engine prewiring wiring harness
D103	Connection -3-, in engine compartment wiring harness
L2	Connection, in air conditioner wiring harness
*	Only models with air conditioner

ws	=	white
sw	=	black
ro	=	red
br	=	brown
gn	=	green
bl	=	blue
gr	=	grey
li	=	purple
ge	=	yellow
or	=	orange
rs	=	pink

satelettronica

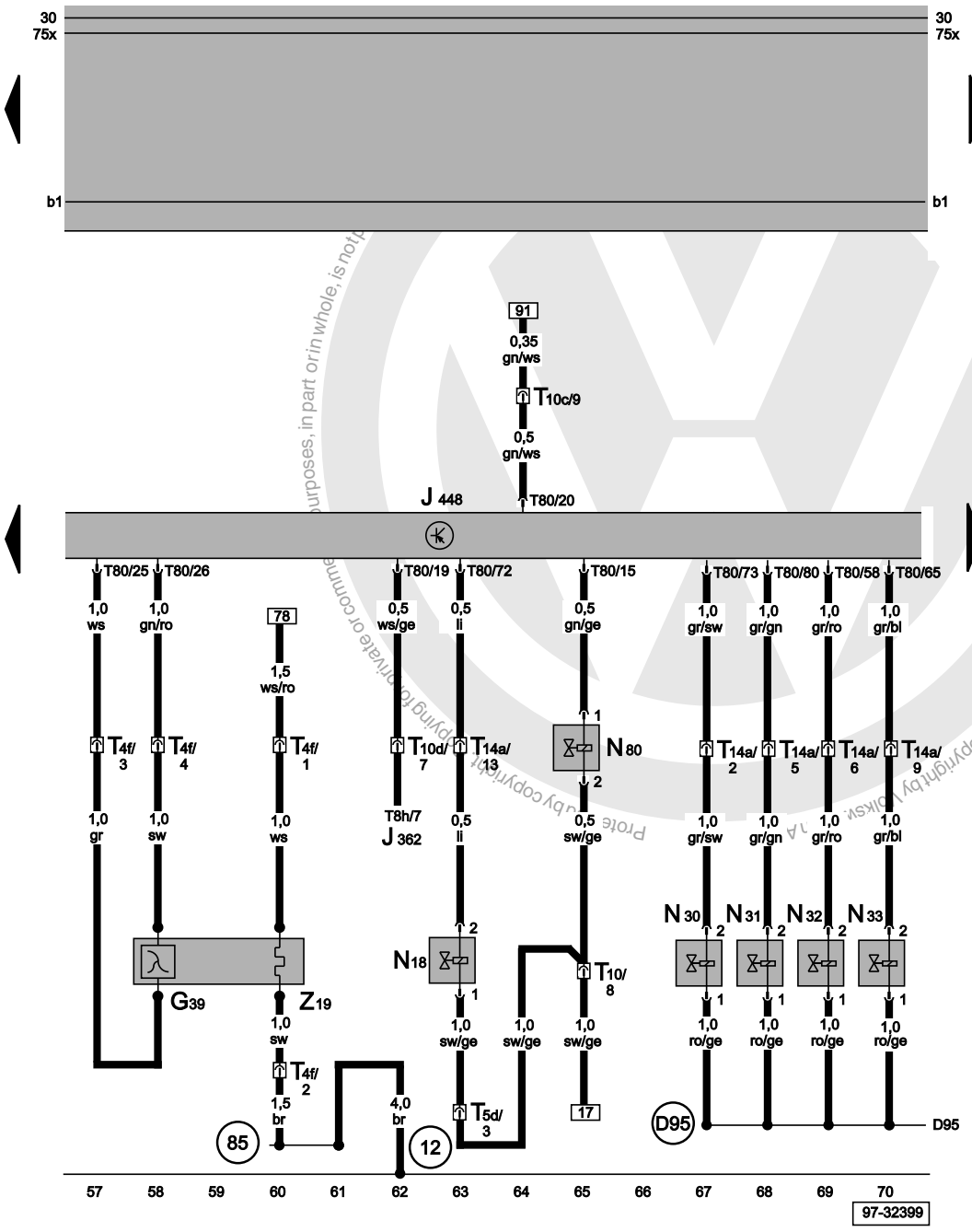

4CV control unit (injection system), throttle valve control unit, intake air temperature sender, intake manifold pressure sender, exhaust gas recirculation valve, activated charcoal filter system solenoid valve 1

G39	Lambda probe
J362	Immobilizer control unit, next to steering column
J448	4AV/4CV (injection system) control unit
N18	Exhaust gas recirculation valve
N30	Injector, cylinder 1
N31	Injector, cylinder 2
N32	Injector, cylinder 3
N33	Injector, cylinder 4
N80	Activated charcoal filter system solenoid valve 1
T4f	4-pin connector, black, on gearbox
T5d	5-pin connector, black, on engine
T8h	8-pin connector
T10	10-pin connector, white, near relay station
T10c	10-pin connector, blue, near relay station
T10d	10-pin connector, red, near relay station
T14a	14-pin connector, brown, on engine
T80	80-pin connector
Z19	Lambda probe heater
12	Earth point, in engine compartment, left
85	Earth connection -1-, in engine compartment wiring harness
D95	Connection (injectors), in engine compartment wiring harness

ws	=	white
sw	=	black
ro	=	red
br	=	brown
gn	=	green
bl	=	blue
gr	=	grey
li	=	purple
ge	=	yellow
or	=	orange
rs	=	pink

satelettronica

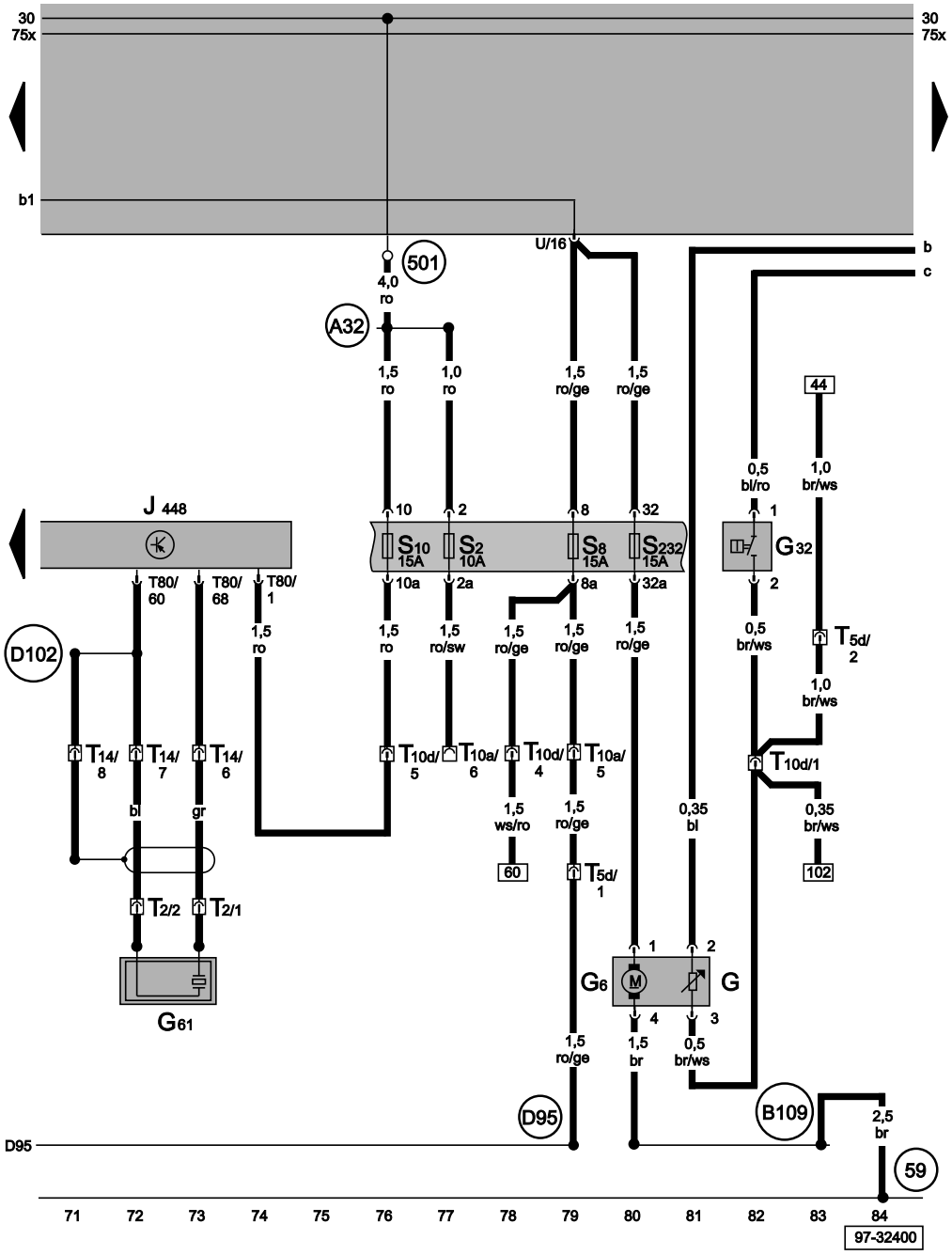

4CV control unit (injection system), coolant shortage indicator sender, fuel pump (pre-supply pump), fuel gauge sender, knock sensor

G	Fuel gauge sender
G6	Fuel pump
G32	Coolant shortage indicator sender
G61	Knock sensor I
J448	4AV/4CV (injection system) control unit
S2	Fuse in fuse box/relay plate
S8	Fuse in fuse box/relay plate
S10	Fuse in fuse box/relay plate
S232	Fuse in fuse box
T2	2-pin connector, black, on engine
T5d	5-pin connector, black, on engine
T10a	10-pin connector, green, near relay station
T10d	10-pin connector, red, near relay station
T14	14-pin connector, black, on engine
T80	80-pin connector
59	Earth point, near left tail light
501	Screwed connection -2- (30), on relay plate
A32	Positive (+) connection (30), in dash panel wiring harness
B109	Earth connection, in interior wiring harness, rear left
D95	Connection (injectors), in engine compartment wiring harness
D102	Connection -2-, in engine compartment wiring harness

ws	=	white
sw	=	black
ro	=	red
br	=	brown
gn	=	green
bl	=	blue
gr	=	grey
li	=	purple
ge	=	yellow
or	=	orange
rs	=	pink

Protected by copyright. Copyright by Volkswagen AG. Copying for private or commercial purposes, in part or in whole, is not permitted unless authorised by Volkswagen AG. Volkswagen AG does not guarantee or accept any liability with respect to the correctness of information in this document.
satelettronica

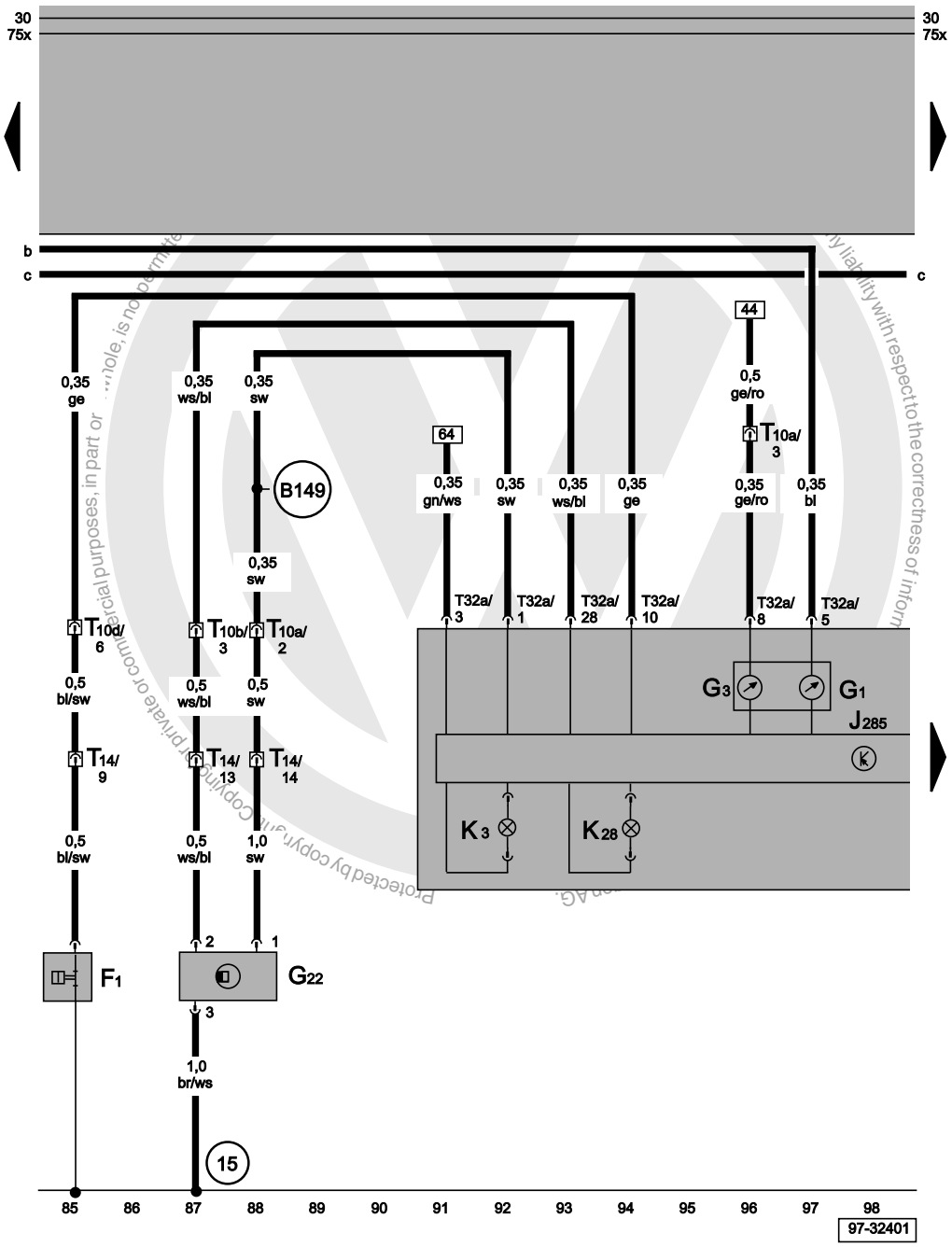

Dash panel insert, fuel gauge, coolant shortage and coolant temperature indicator, oil pressure switch, speedometer sender

F1	Oil pressure switch
G1	Fuel gauge
G3	Coolant temperature gauge
G22	Speedometer sender (Hall sender, on gearbox)
J285	Control unit with display in dash panel insert
K3	Oil pressure warning lamp
K28	Coolant temperature/coolant shortage warning lamp
T10a	10-pin connector, green, near relay station
T10b	10-pin connector, black, near relay station
T10d	10-pin connector, red, near relay station
T14	14-pin connector, black, on engine
T32a	32-pin connector, blue
15	Earth point, on cylinder head
B149	Positive (+) connection -2- (15a), in interior wiring harness

ws	=	white
sw	=	black
ro	=	red
br	=	brown
gn	=	green
bl	=	blue
gr	=	grey
li	=	purple
ge	=	yellow
or	=	orange
rs	=	pink

Protected by copyright. Copying for private or commercial purposes, in part or in whole, is not permitted unless authorised by Volkswagen AG. Volkswagen AG does not guarantee or assume any liability with respect to the correctness of information.

satelettronica

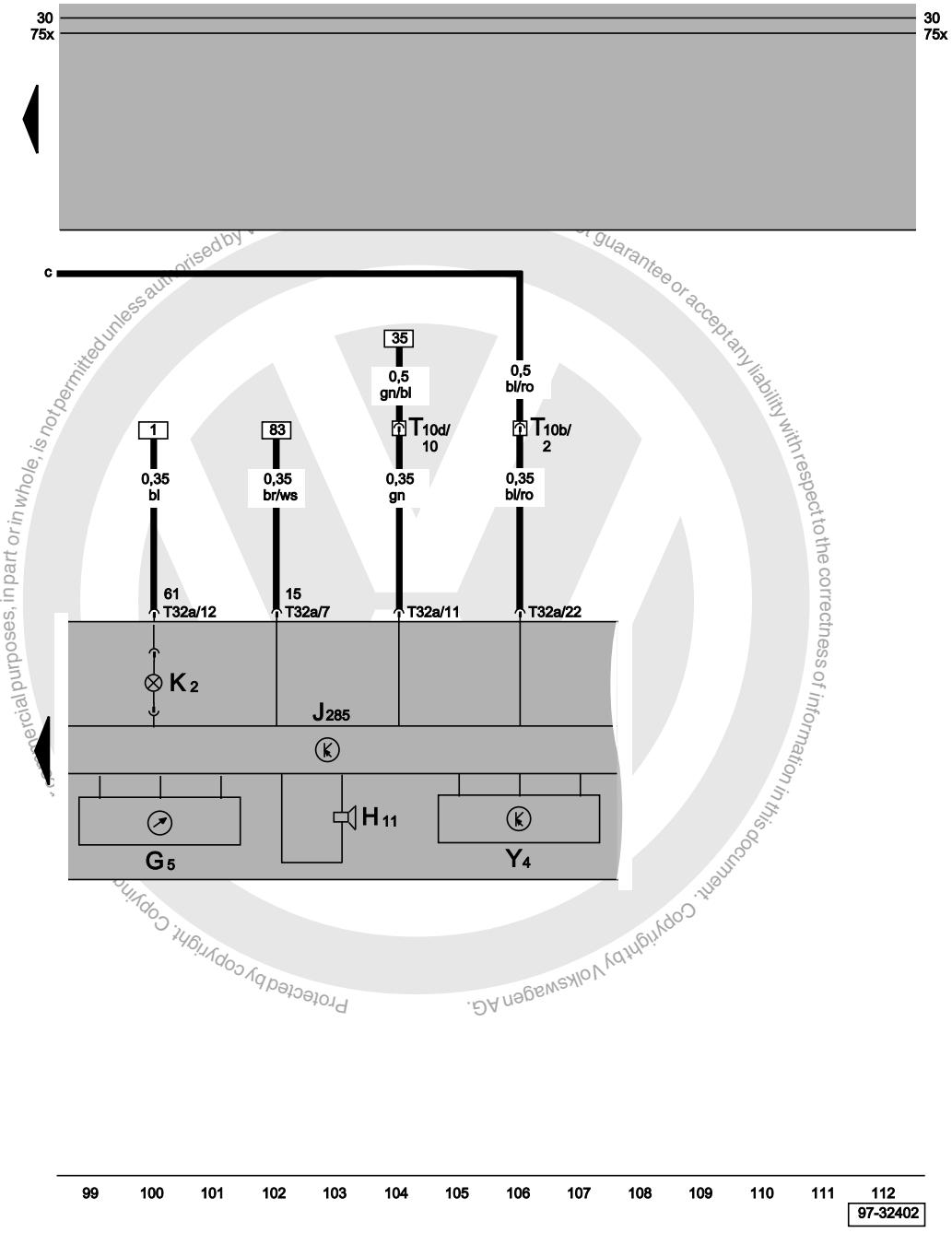

Rev. counter, oil pressure warning buzzer, alternator warning lamp, odometer display, dash panel insert

G5	Rev. counter
H11	Oil pressure warning buzzer
J285	Control unit with display in dash panel insert
K2	Alternator warning lamp
T10b	10-pin connector, black, near relay station
T10d	10-pin connector, red, near relay station
T32a	32-pin connector, blue
Y4	Odometer display

ws	=	white
sw	=	black
ro	=	red
br	=	brown
gn	=	green
bl	=	blue
gr	=	grey
li	=	purple
ge	=	yellow
or	=	orange
rs	=	pink

Protected by copyright. Copyright by Volkswagen AG. Copyright, commercial purposes, in part or in whole, is not permitted unless authorised by VW. VW does not guarantee or accept any liability with respect to the correctness of information in this document.

satelettronica

Basic equipment

From October 1999

Notes:

For information concerning

- Relay and fuse assignment
- Multi-pin connectors
- Control units and relays
- Earth connections

⇒ Overview of Fitting Locations!

For information concerning

- Fault Finding Programs

⇒ Guided Fault Finding

Protected by copyright. Copying for private or commercial purposes, in part or in whole, is not permitted unless authorised by Volkswagen AG. Volkswagen AG does not guarantee or accept any liability with respect to the correctness of information in this document. Copyright by Volkswagen AG.

satelettronica

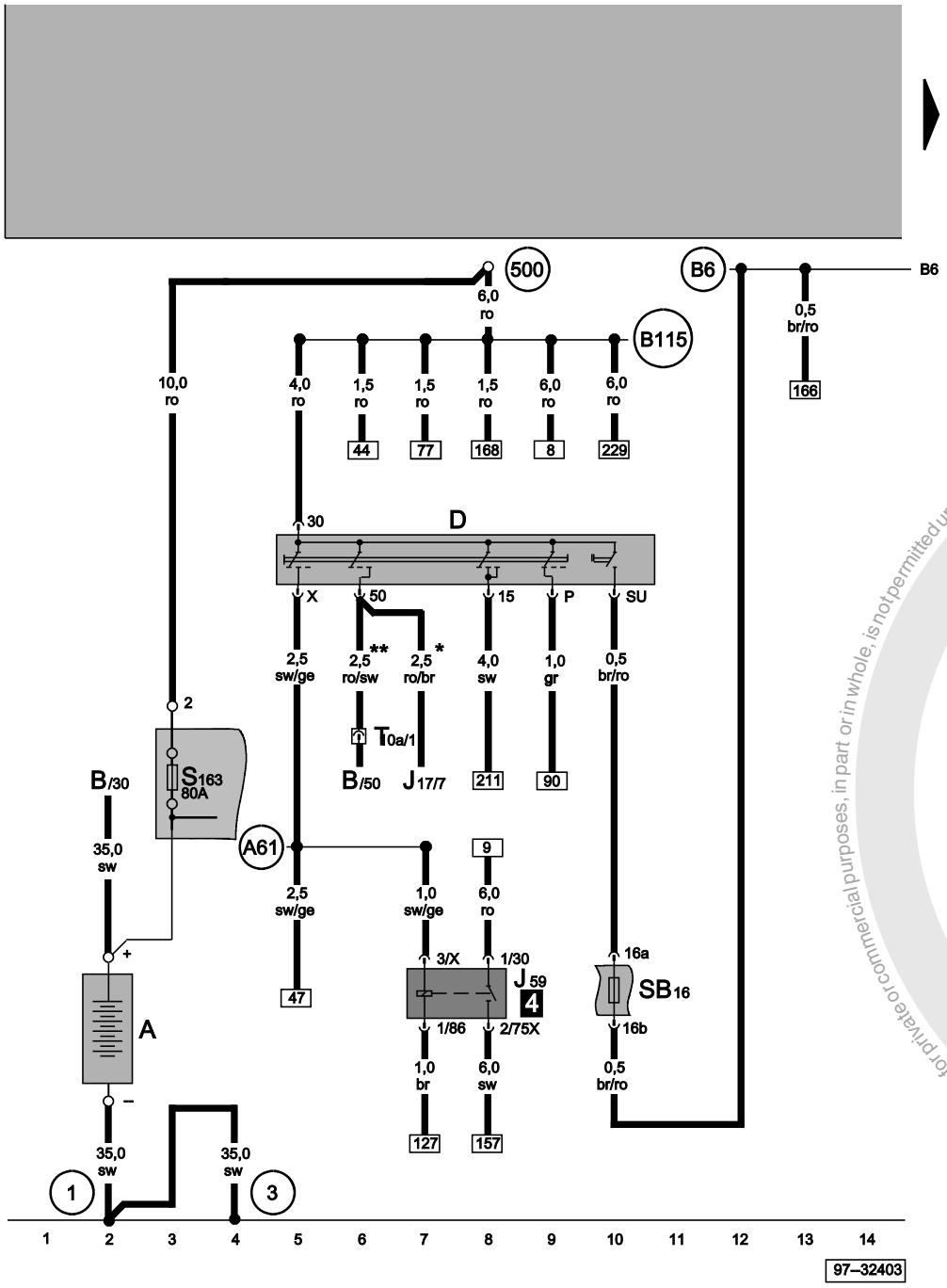

Battery, ignition/starter switch, X-contact relief relay

A	Battery
B	Starter
D	Ignition/starter switch
J17	Fuel pump relay
J59	X-contact relief relay
SB16	Fuse 16 on fuse holder
S163	Fuse 2 (30), on battery fuse holder
T10a	10-pin connector, green, near relay station
1	Earth strap, battery - body
3	Earth strap, engine - body
500	Screw connection 1 (30), on relay plate
A61	Positive connection (X), in instrument panel wiring harness
B6	Connection (s), in steering column switch wiring harness
B115	Positive connection, (30, central electrics), in interior wiring harness
*	Only models with petrol engine
**	Only models with diesel engine

ws	=	white
sw	=	black
ro	=	red
br	=	brown
gn	=	green
bl	=	blue
gr	=	grey
li	=	purple
ge	=	yellow
or	=	orange
rs	=	pink

Protected by copyright. Copying for private or commercial purposes, in part or in whole, is not permitted unless authorised by Volkswagen AG. Volkswagen AG does not guarantee or accept any liability with respect to the correctness of information in this document. Copyright by Volkswagen AG.
satelettronica

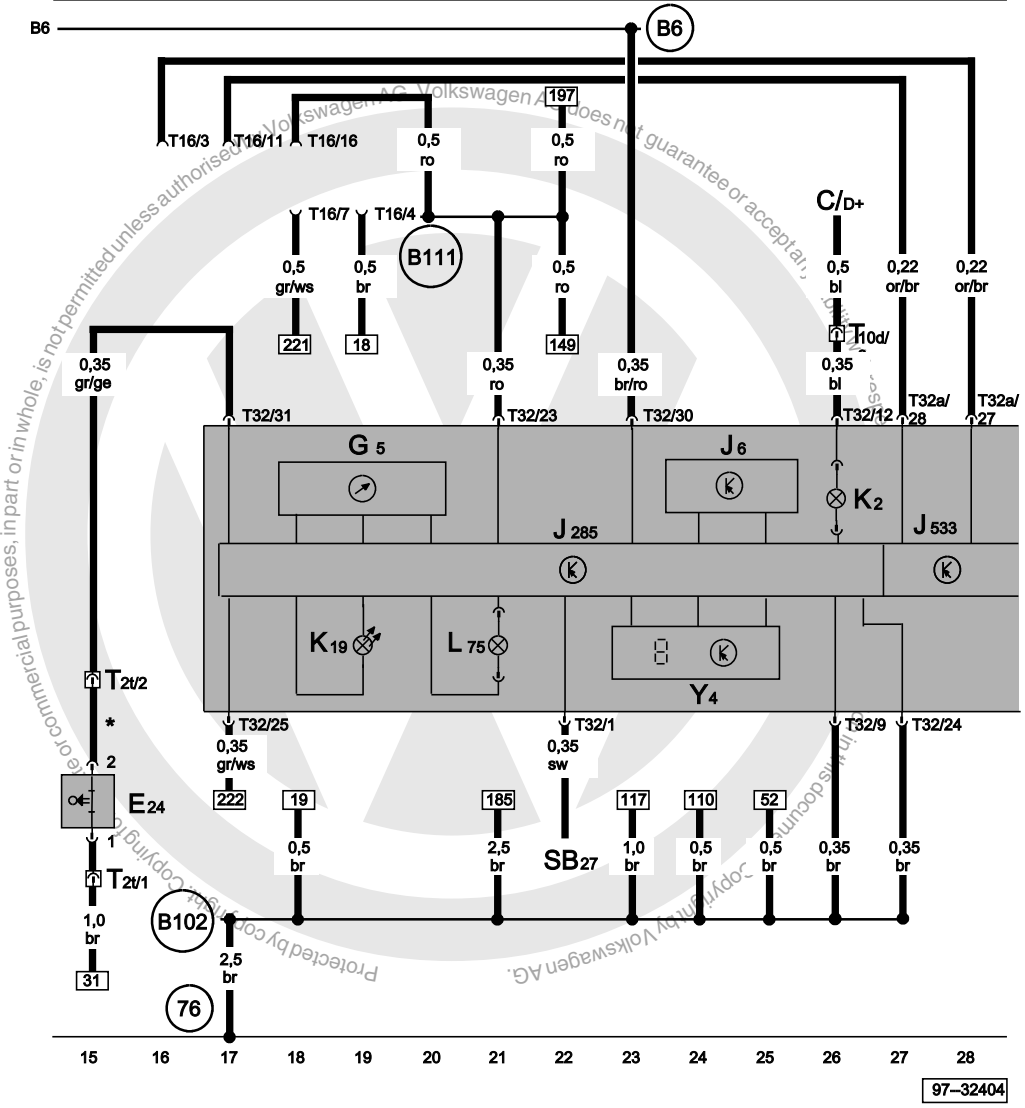

Dash panel insert, rev. counter, self-diagnosis connection, odometer, seat belt warning system, data bus diagnostic interface

C	Alternator
E24	Driver side belt switch
G5	Rev. counter
J6	Voltage stabiliser
J285	Control unit with display in dash panel insert
J533	Data bus diagnostic interface control unit
K2	Alternator warning lamp
K19	Seat belt warning system warning lamp
SB27	Fuse 27 on fuse holder
L75	Digital display illumination bulb
T2t	2-pin connector, under driver seat
T10d	10-pin connector, red, relay station
T16	16-pin connector, self-diagnosis connection, on right in glove compartment
T32	32-pin connector, blue
Y4	Trip counter
76	Earth point, near selector mechanism
B6	Connection (s), in steering column switch wiring harness
B102	Earth connection, in front left interior wiring harness
B111	Positive connection 1 (30a), in interior wiring harness
*	Not on all equipment levels

ws	=	white
sw	=	black
ro	=	red
br	=	brown
gn	=	green
bl	=	blue
gr	=	grey
li	=	purple
ge	=	yellow
or	=	orange
rs	=	pink

Volkswagen AG does not guarantee or accept any liability with respect to the correctness of information in this document. Copyright by Volkswagen AG. Protected by copyright. Copying for private or commercial purposes, in part or in whole, is not permitted unless authorised by Volkswagen AG.

satelettronica

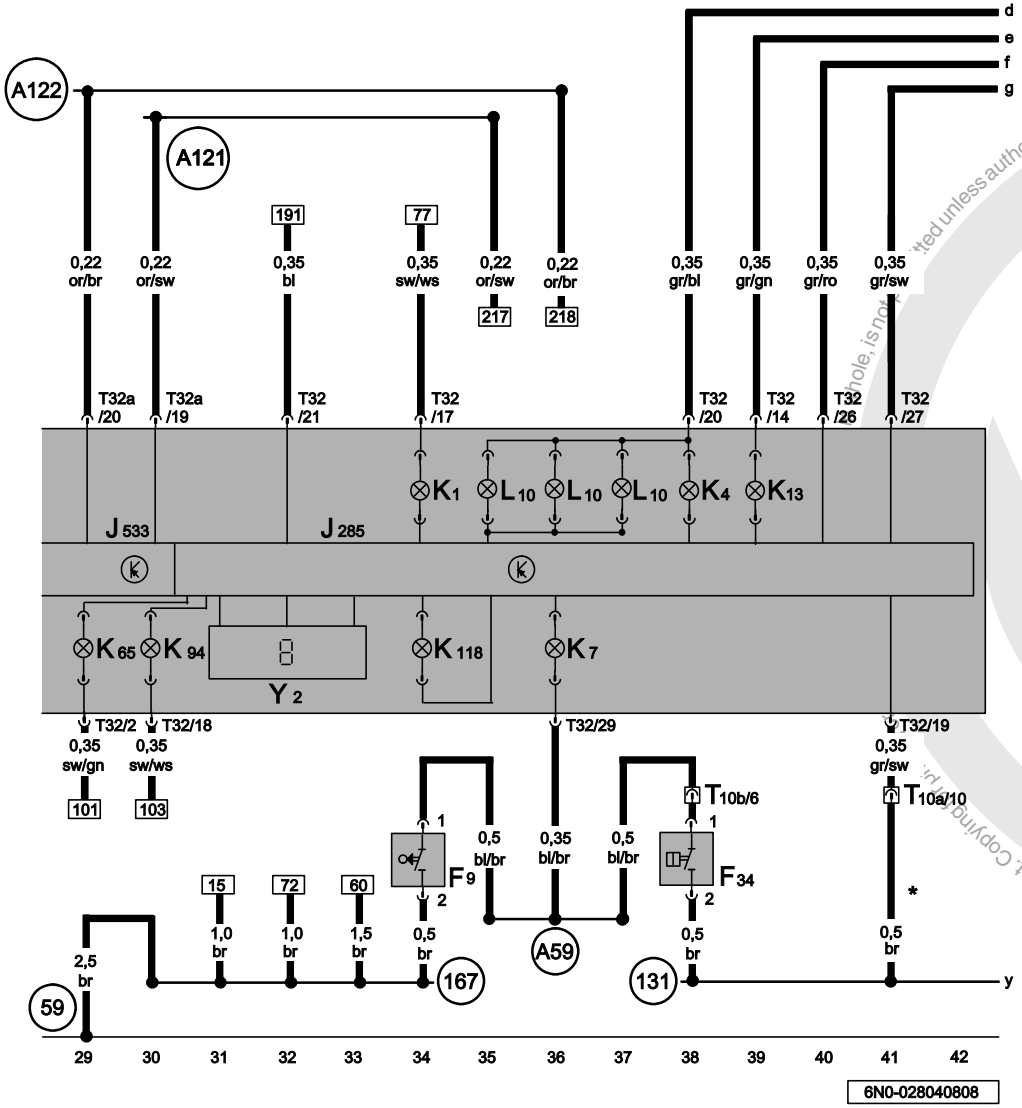

Dash panel insert, digital clock, main beam warning lamp, side light warning lamp, turn signal indicator lamp, handbrake warning, brake fluid level warning contact

F9	Handbrake warning switch
F34	Brake fluid level warning contact
J285	Control unit with display in dash panel insert
J533	Data bus diagnostic interface control unit
K1	Main beam warning lamp
K4	Side light warning lamp
K7	Dual circuit brakes/handbrake warning lamp
K13	Rear fog light warning lamp
K65	Left turn signal warning lamp
K94	Right turn signal warning lamp
K118	Brake system warning lamp
L10	Dash panel insert illumination bulb
T10a	10-pin connector, near relay station
T10b	10-pin connector, near relay station
T32	32-pin connector, blue
T32a	32-pin connector, green
Y2	Digital clock
59	Earth point, near left tail light
131	Earth connection 2, in engine compartment wiring harness
167	Earth connection 4, in engine compartment wiring harness
A59	Connection (sender), in dash panel wiring harness
A121	Connection (high bus), in dash panel wiring harness
A122	Connection (low bus), in dash panel wiring harness
*	Not for ABS

ws	=	white
sw	=	black
ro	=	red
br	=	brown
gn	=	green
bl	=	blue
gr	=	grey
li	=	purple
ge	=	yellow
or	=	orange
rs	=	pink

Copyright by Volkswagen AG. Protected by copyright. Copying, in whole, is not permitted unless authorised by Volkswagen AG. Volkswagen AG does not guarantee or assume any liability with respect to the correctness of information in this document.
satelettronica

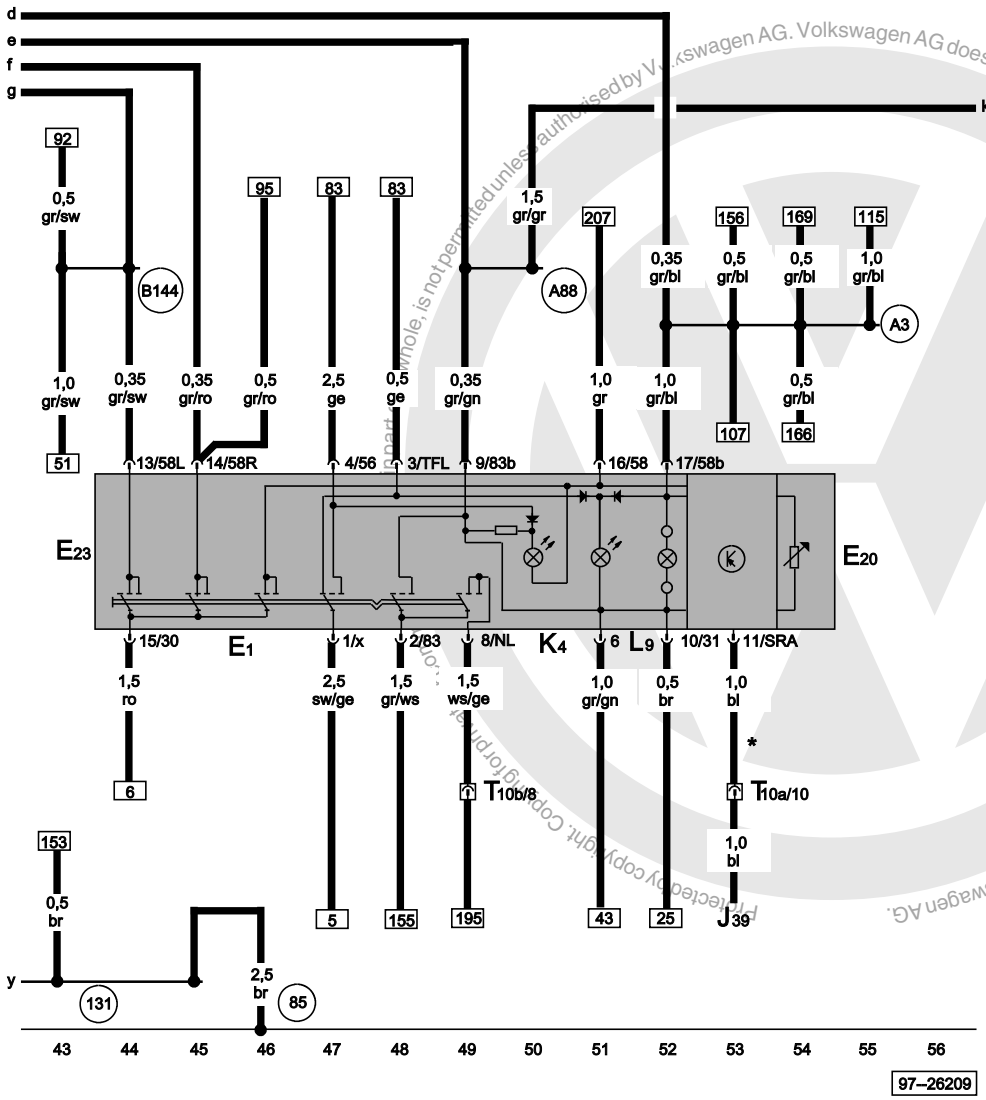

Light switch, switch and instrument illumination regulator

E1	Light switch
E20	Switch and instrument illumination regulator
E23	Front and rear fog light switch
J39	Headlight washer system relay
K4	Side light warning lamp
L9	Light switch illumination bulb
T10a	10-pin connector, green, near relay station
T10b	10-pin connector, black, near relay station
85	Earth connection 1, in engine compartment wiring harness
131	Earth connection 2, in engine compartment wiring harness
A3	Positive connection (58), in dash panel wiring harness
A88	Connection (RFL), in dash panel wiring harness
B1	Connection (56b), in steering column switch wiring harness
B144	Positive connection (58l), in interior wiring harness
*	Only models with headlight washer system

ws	=	white
sw	=	black
ro	=	red
br	=	brown
gn	=	green
bl	=	blue
gr	=	grey
li	=	purple
ge	=	yellow
or	=	orange
rs	=	pink

Reproduction, in part or whole, is not permitted unless authorised by Volkswagen AG. Volkswagen AG does not guarantee or accept any liability with respect to the correctness of information in this document. Copyright by Volkswagen AG.
Protected by copyright. Copying for private or commercial purposes, in part or whole, is not permitted unless authorised by Volkswagen AG.
satelettronica

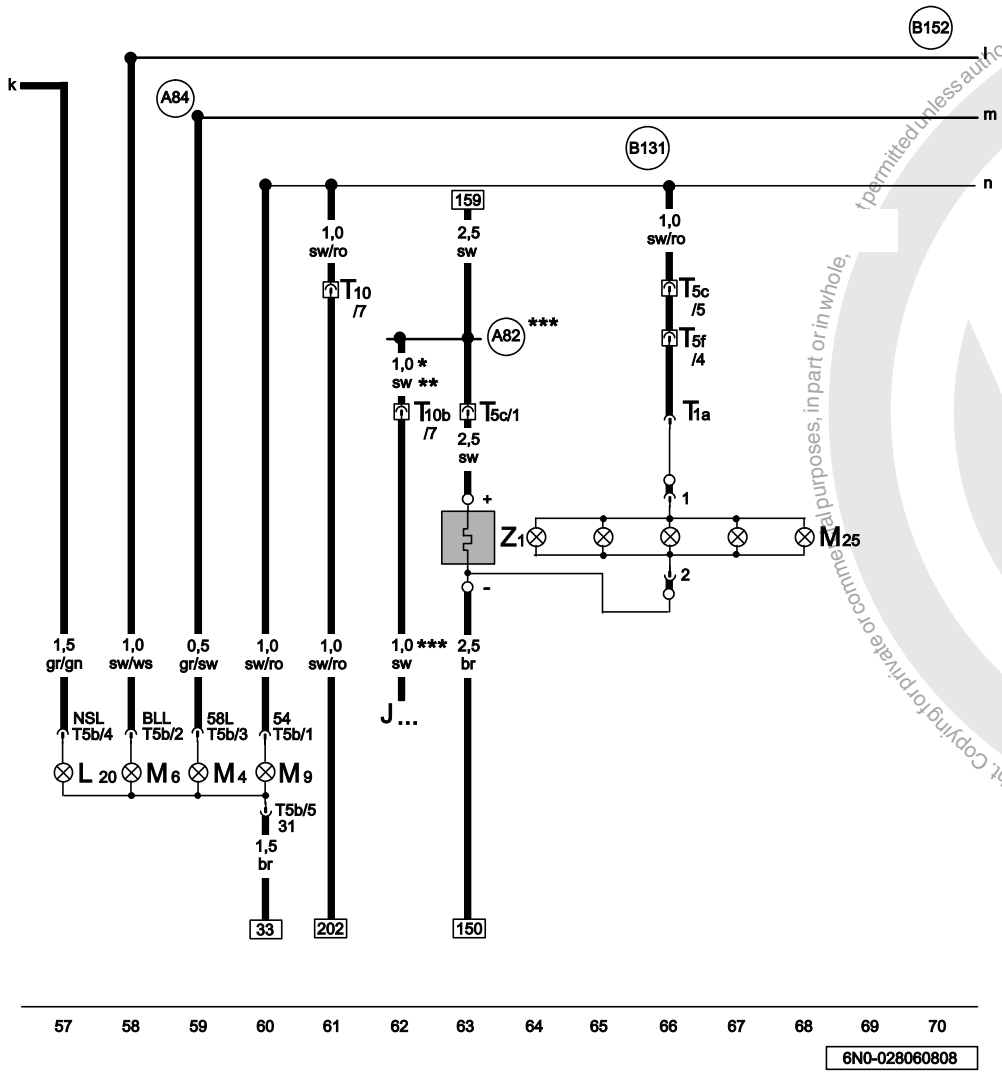

Left tail light, left brake light, rear fog light, heated rear window

J...	Injection system control units
L20	Rear fog light bulb
M4	Left tail light bulb
M6	Rear left turn signal bulb
M9	Left brake light bulb
M25	High level brake light bulb
T1a	1-pin connector, black, in rear lid
T5b	5-pin connector, black, on left rear light
T5c	5-pin connector, black, in rear lid feeder wiring harness
T5f	5-pin connector, black, in rear lid
T10	10-pin connector, white, near relay station
T10b	10-pin connector, black, near relay station
Z1	Heated rear window
A82	Connection (windscreen heater), in dash panel wiring harness
A84	Connection (58L), in dash panel wiring harness
B131	Connection (54), in interior wiring harness
B152	Connection (BL), in interior wiring harness
*	Not with all levels of equipment
**	Not models with an automatic gearbox
***	Only models with a petrol engine

ws	=	white
sw	=	black
ro	=	red
br	=	brown
gn	=	green
bl	=	blue
gr	=	grey
li	=	purple
ge	=	yellow
or	=	orange
rs	=	pink

t permitted unless authorised by Volkswagen AG. Volkswagen AG does not give any warranty or assume any liability with respect to the correctness of information in this document. Copyright by Volkswagen AG. Protected by copyright. Copying for private or commercial purposes, in part or in whole,
satelettronica

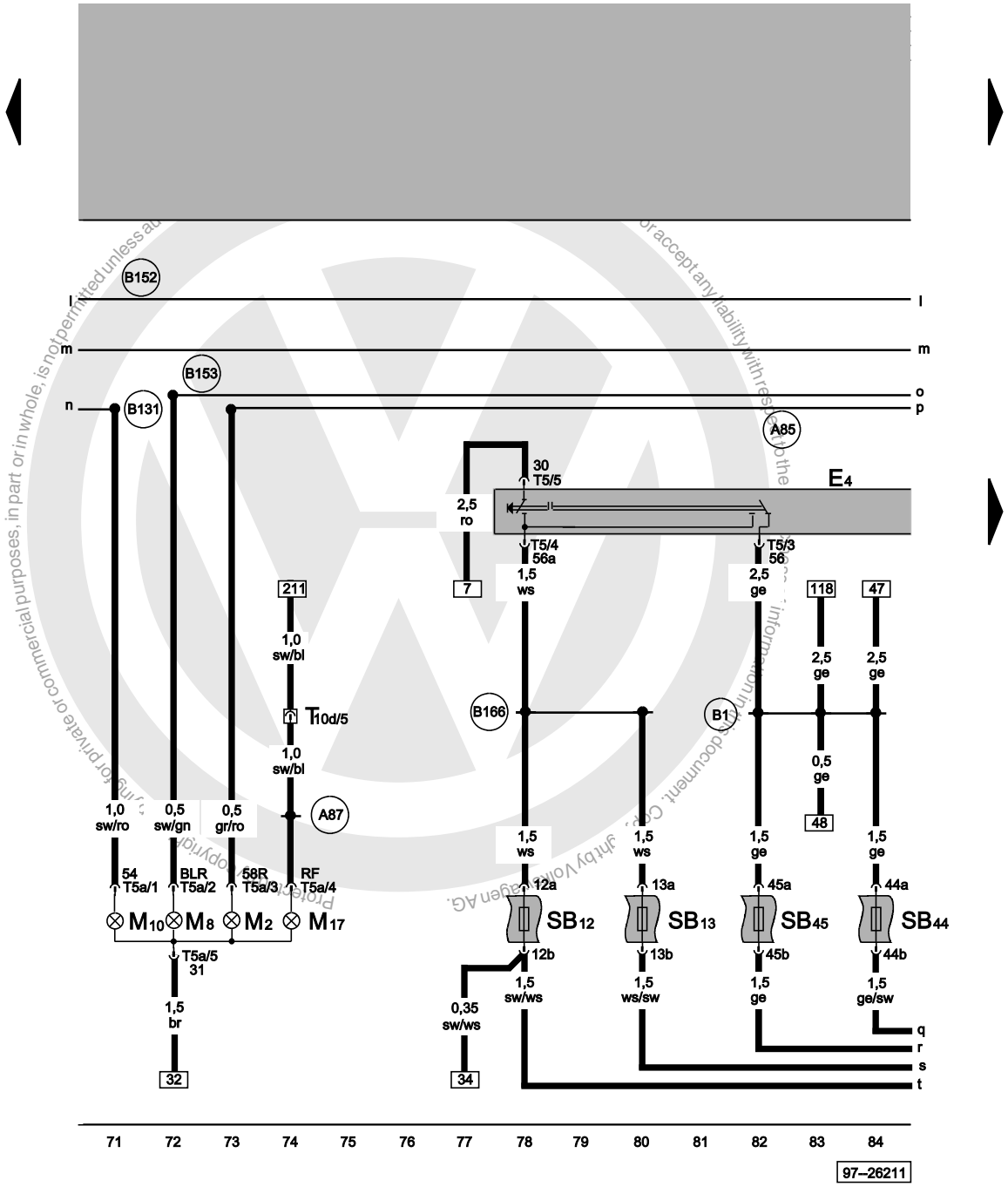

Right tail light, right brake light, reversing light, headlight dipper/flasher switch

E4	Headlight dipper and flasher switch
M2	Right tail light bulb
M8	Rear right turn signal bulb
M10	Right brake light bulb
M17	Right reversing light bulb
SB12	Fuse 12 in fuse holder
SB13	Fuse 13 in fuse holder
SB44	Fuse 44 on fuse holder
SB45	Fuse 45 on fuse holder
T5	5-pin connector, black, behind steering column switch trim
T5a	5-pin connector, black, on rear right tail light
T10d	10-pin connector, red, near relay station
A85	Connection (58R), in dash panel wiring harness
A84	Connection (58L), in dash panel wiring harness
A87	Connection (RL), in dash panel wiring harness
B1	Connection (56b), in steering column switch wiring harness
B131	Connection (54), in interior wiring harness
B152	Connection (BL), in interior wiring harness
B153	Connection (RTS), in interior wiring harness
B166	Connection (56a), in interior wiring harness

ws	=	white
sw	=	black
ro	=	red
br	=	brown
gn	=	green
bl	=	blue
gr	=	grey
li	=	purple
ge	=	yellow
or	=	orange
rs	=	pink

satelettronica

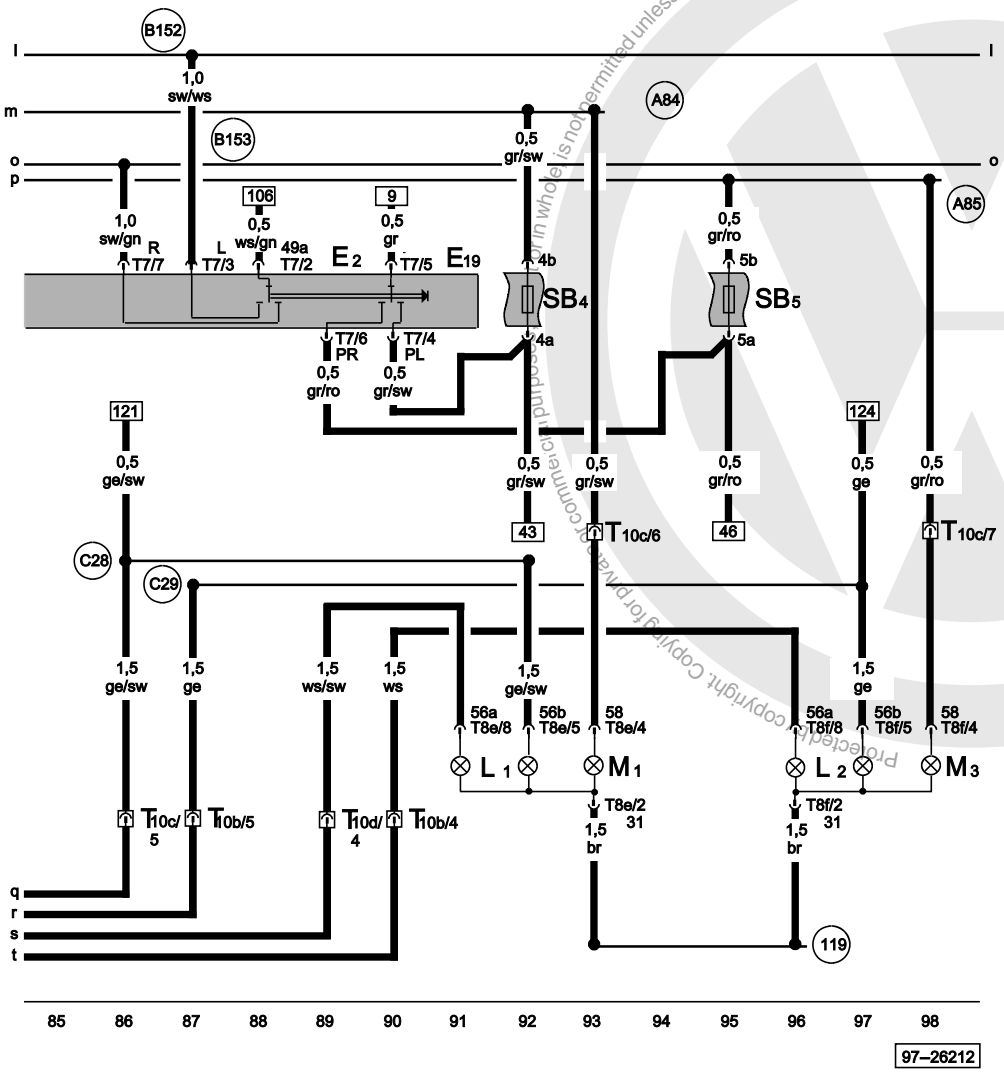

Turn signal switch, parked light switch, front bulbs

E2	Turn signal switch
E19	Parking light switch
L1	Left twin filament bulb
L2	Right twin filament bulb
M1	Left side light bulb
M3	Right side light bulb
SB4	Fuse 4 in fuse holder
SB5	Fuse 5 in fuse holder
T7	7-pin connector, black, behind steering column switch trim
T8e	8-pin connector, black, near left headlight
T8f	8-pin connector, black, near left headlight
T10b	10-pin connector, black, near relay station
T10c	10-pin connector, blue
T10d	10-pin connector, red
119	Earth connection 1, in headlight wiring harness
A84	Connection (58L), in dash panel wiring harness
A85	Connection (58R), in dash panel wiring harness
B152	Connection (BL), in interior wiring harness
B153	Connection (RTS), in interior wiring harness
C28	Connection 1 (56b), in headlight wiring harness
C29	Connection 2 (56b), in headlight wiring harness

ws	=	white
sw	=	black
ro	=	red
br	=	brown
gn	=	green
bl	=	blue
gr	=	grey
li	=	purple
ge	=	yellow
or	=	orange
rs	=	pink

swagen AG does not guarantee or accept any liability with respect to the correctness of information. Copyright by Volkswagen AG.
Protected by copyright. Copying for private or commercial purposes, in part or in whole, is not permitted unless authorised by Volkswagen AG.
satelettronica

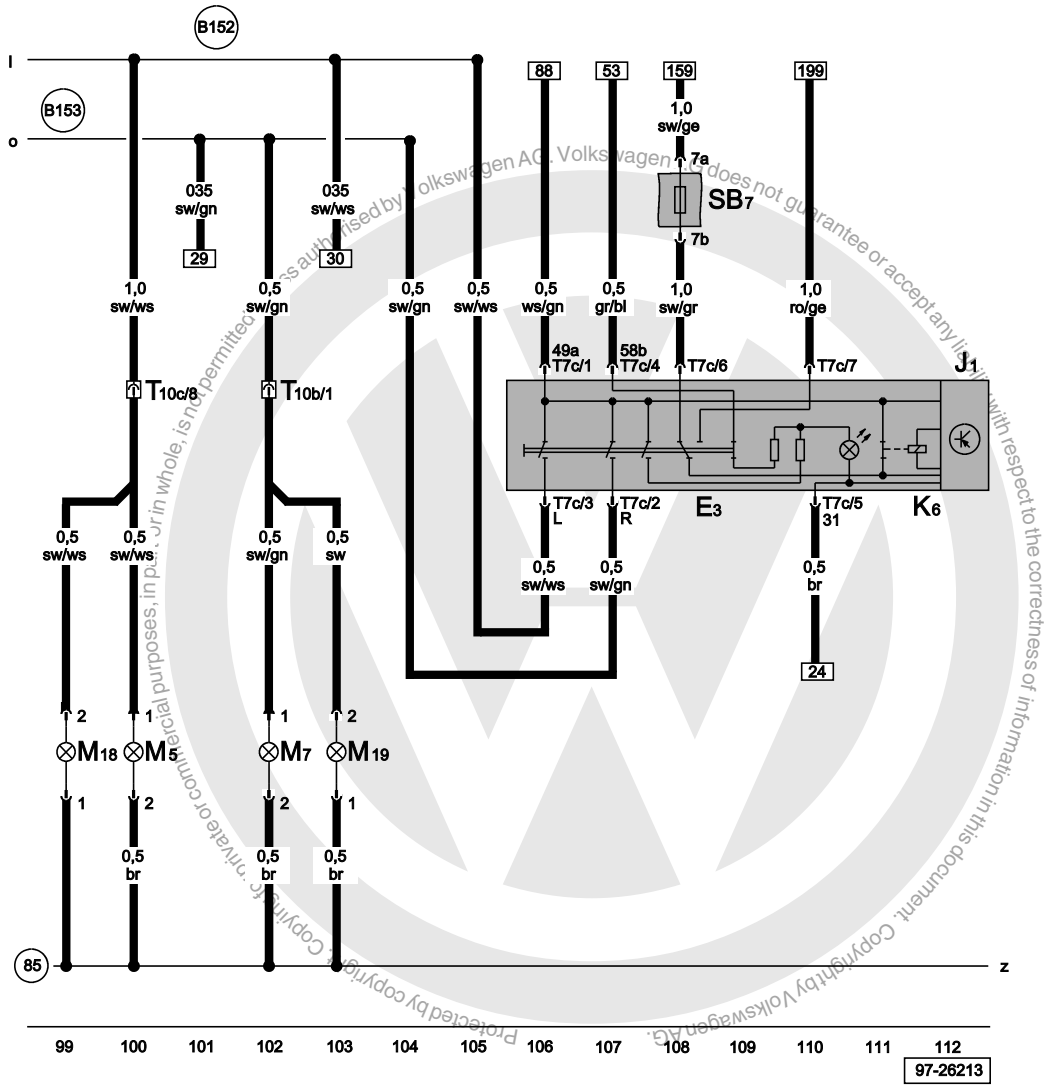

Hazard warning light switch, turn signal relay, front turn signals

E3	Hazard warning light switch
J1	Turn signal relay
K6	Hazard warning light system warning lamp
M5	Front left turn signal bulb
M7	Front right turn signal bulb
M18	Left side repeater turn signal bulb
M19	Right side repeater turn signal bulb
SB7	Fuse 7 on fuse holder
T7c	7-pin connector
T10b	10-pin connector, black, coupling station under relay carrier
T10c	10-pin connector, blue, coupling station under relay carrier
85	Earth connection 1, in engine compartment wiring harness
B152	Connection (BL), in interior wiring harness
B153	Connection (RTS), in interior wiring harness

ws	=	white
sw	=	black
ro	=	red
br	=	brown
gn	=	green
bl	=	blue
gr	=	grey
li	=	purple
ge	=	yellow
or	=	orange
rs	=	pink

Protected by copyright. Copyright by Volkswagen AG. Volkswagen AG does not guarantee or accept any liability with respect to the correctness of information in this document. Copyright by Volkswagen AG. Copying for private or commercial purposes, in part or in whole, is not permitted unless authorised by Volkswagen AG.

satelettronica

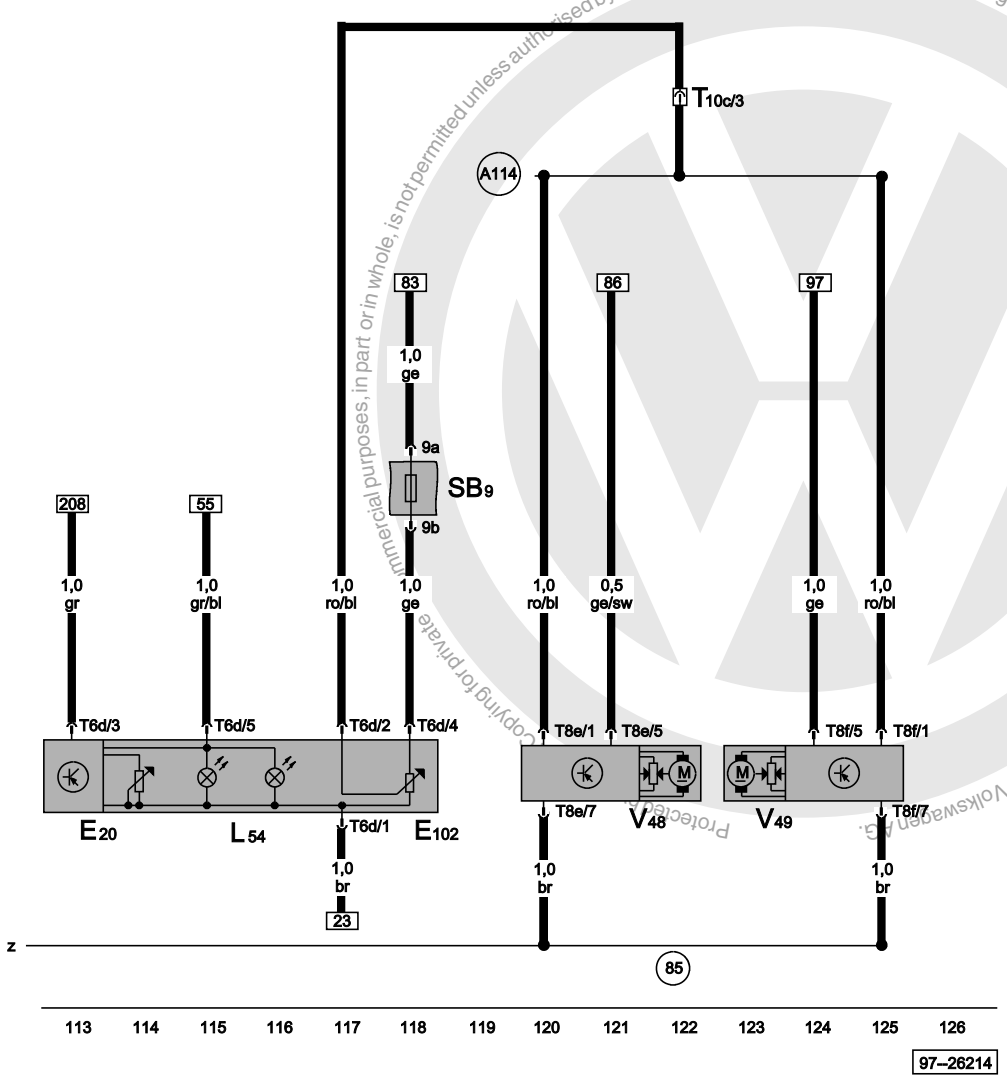

Headlight range control *

E20	Switch and instrument illumination regulator *
E102	Headlight range control regulator *
L54	Headlight range control regulator illumination bulb
SB9	Fuse 9 on fuse holder
T6	6-pin connector
T8e	8-pin connector, black, near left headlight
T8f	8-pin connector, black, near left headlight
T10c	10-pin connector, blue, near relay station
V48	Headlight range control motor *
V49	Right headlight range control motor *
85	Earth connection 1, in engine compartment wiring harness
A114	Connection (headlight range control), in dash panel wiring harness
*	Not for gas discharge headlight, see current flow diagram No. 43

ws	=	white
sw	=	black
ro	=	red
br	=	brown
gn	=	green
bl	=	blue
gr	=	grey
li	=	purple
ge	=	yellow
or	=	orange
rs	=	pink

Copyright by Volkswagen AG. Protected by copyright. Copying for private or commercial purposes, in part or in whole, is not permitted unless authorised by Volkswagen AG. Volkswagen AG does not guarantee or accept any liability with respect to the correctness of information in this document.

satelettronica

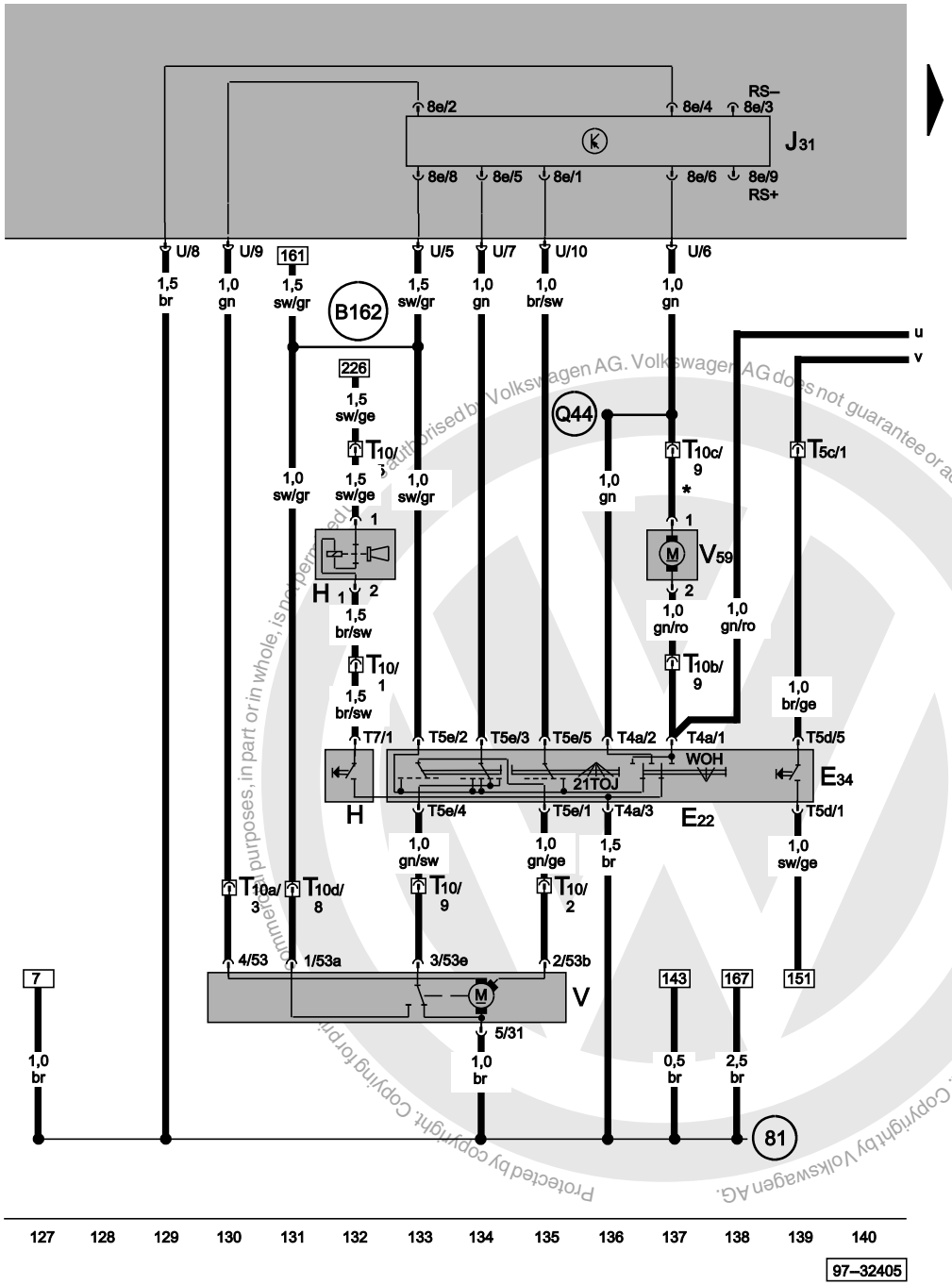

Intermittent wiper switch, wiper motor, front and rear washer pump, intermittent wash and wipe relay, horn, dual tone horn

E22	Intermittent wiper switch
E34	Rear wiper switch
H	Horn plate
H1	Horn or dual tone horn
J31	Automatic intermittent wash and wipe relay
T4a	4-pin connector, black, behind steering column switch trim
T5c	5-pin connector, black, in rear lid feeder wiring harness
T5e	5-pin connector, black, behind steering column switch trim
T7	7-pin connector, black, behind steering column switch trim
T10	10-pin connector, white, near relay station
T10a	10-pin connector, green, near relay station
T10b	10-pin connector, black, near relay station
T10c	10-pin connector, blue, near relay station
T10d	10-pin connector, red
V	Windscreen wiper motor
V59	Windscreen and rear window washer pump
81	Earth connection 1, in dash panel wiring harness
B162	Connection (75a), in interior wiring harness
Q44	Connection 2, in rear lid wiring harness
*	Not with headlight washer system

ws	=	white
sw	=	black
ro	=	red
br	=	brown
gn	=	green
bl	=	blue
gr	=	grey
li	=	purple
ge	=	yellow
or	=	orange
rs	=	pink

Protected by copyright. Copying for private or commercial purposes, in part or in whole, is not permitted unless authorised by Volkswagen AG. Volkswagen AG does not guarantee or accept any liability with respect to the correctness of information in this document. Copyright by Volkswagen AG.

satelettronica

Rear window wiper motor, luggage compartment light, heater element for washer jet, luggage compartment switch

F5	Luggage compartment light switch
T1c	Single connector, black, in rear wash and wipe system relay
T2	2-pin connector, black, in left plenum chamber
T2d	2-pin connector, black, on left on engine compartment lid
T2e	2-pin connector, black, on right on engine compartment lid
T3a	3-pin connector, black, in rear lid near wiper motor
T5c	5-pin connector, black, in rear lid feeder wiring harness
T5f	5-pin connector, black, in rear lid
V12	Rear window wiper motor
W3	Luggage compartment light
Z20	Left washer jet heater element
Z21	Right washer jet heater element
59	Earth point, near left tail light
287	Earth connection, in rear lid feeder wiring harness
A96	Connection (53a), in dash panel wiring harness

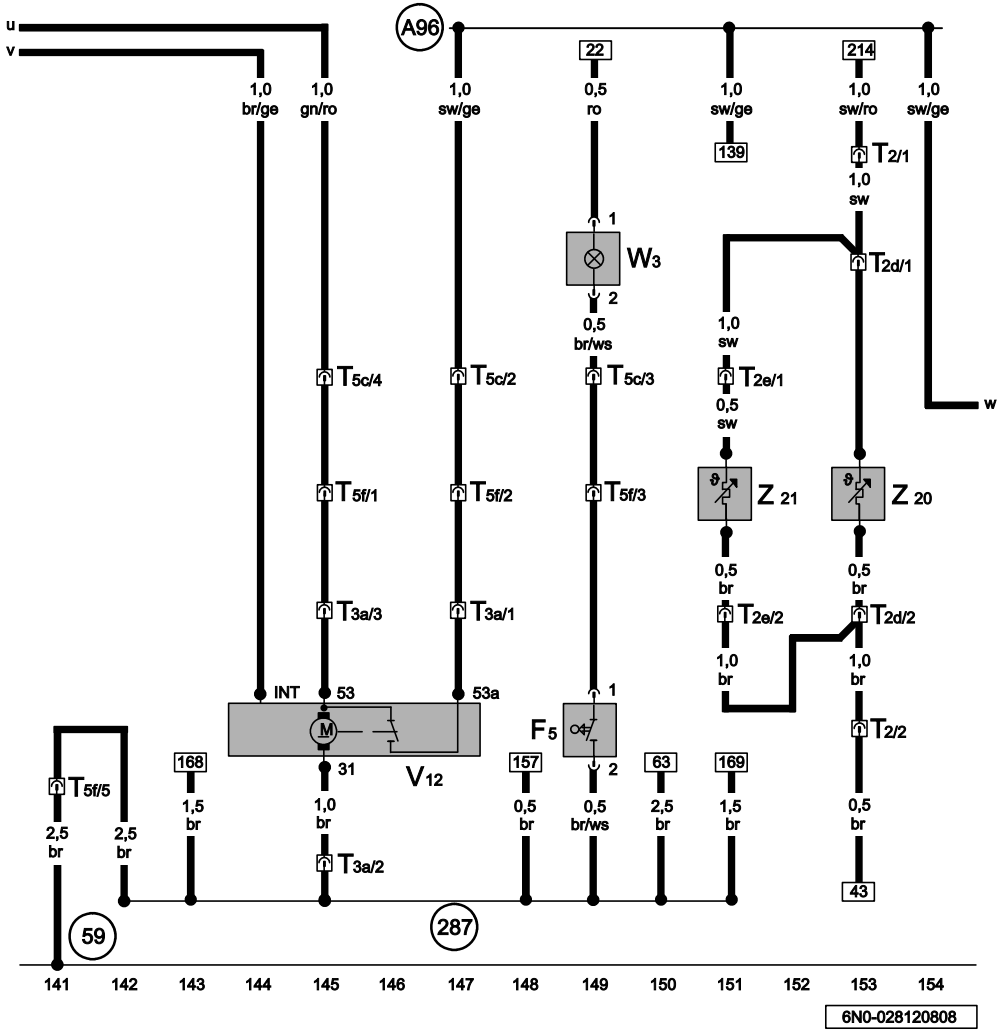

ws	=	white
sw	=	black
ro	=	red
br	=	brown
gn	=	green
bl	=	blue
gr	=	grey
li	=	purple
ge	=	yellow
or	=	orange
rs	=	pink

Protected by copyright. Copying for private or commercial purposes, in part or in whole, is not permitted unless authorised. Volkswagen AG does not guarantee or accept any liability with respect to the correctness of information in this document. Copyright by Volkswagen AG.
satelettronica

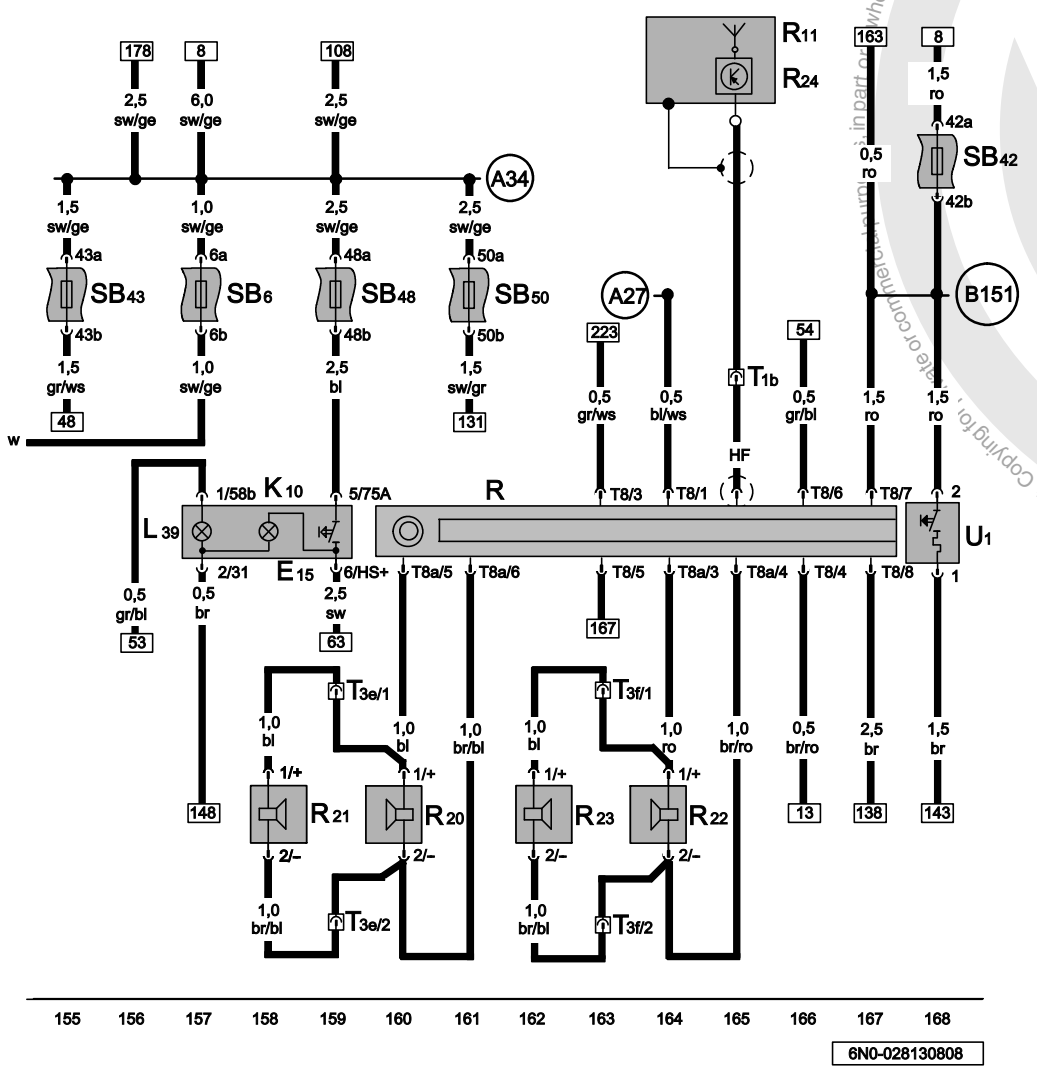

Radio, heated rear window switch, cigarette lighter, aerial, loudspeaker, aerial amplifier, fuses

E15	Heated rear window switch
K10	Heated rear window warning lamp
L39	Heated rear window switch illumination bulb
R	Radio
R11	Aerial
R20	Front left treble loudspeaker
R21	Front left bass loudspeaker
R22	Front right treble loudspeaker
R23	Front right bass loudspeaker
R24	Aerial amplifier
SB6	Fuse 6 on fuse holder
SB42	Fuse 42 on fuse holder
SB43	Fuse 43 on fuse holder
SB48	Fuse 48 on fuse holder
SB50	Fuse 50 on fuse holder
T1b	Single connector, black, on lower part of right A-pillar
T3e	3-pin connector, black, on lower part of left A-pillar
T3f	3-pin connector, black, on lower part of right A-pillar
T8	8-connector, black, on radio
T8a	8-connector, brown, on radio
U1	Cigarette lighter
A27	Connection (speed signal), in dash panel wiring harness
A34	Connection (75x), in dash panel wiring harness
B151	Positive connection 3 (30a), in interior wiring harness

ws	=	white
sw	=	black
ro	=	red
br	=	brown
gn	=	green
bl	=	blue
gr	=	grey
li	=	purple
ge	=	yellow
or	=	orange
rs	=	pink

Protected by copyright. Copying for private or commercial purposes, in part or in whole, is not permitted unless authorised by Volkswagen AG. Volkswagen AG does not guarantee or accept any liability with respect to the correctness of information in this document. Copyright by Volkswagen AG.

satelettronica

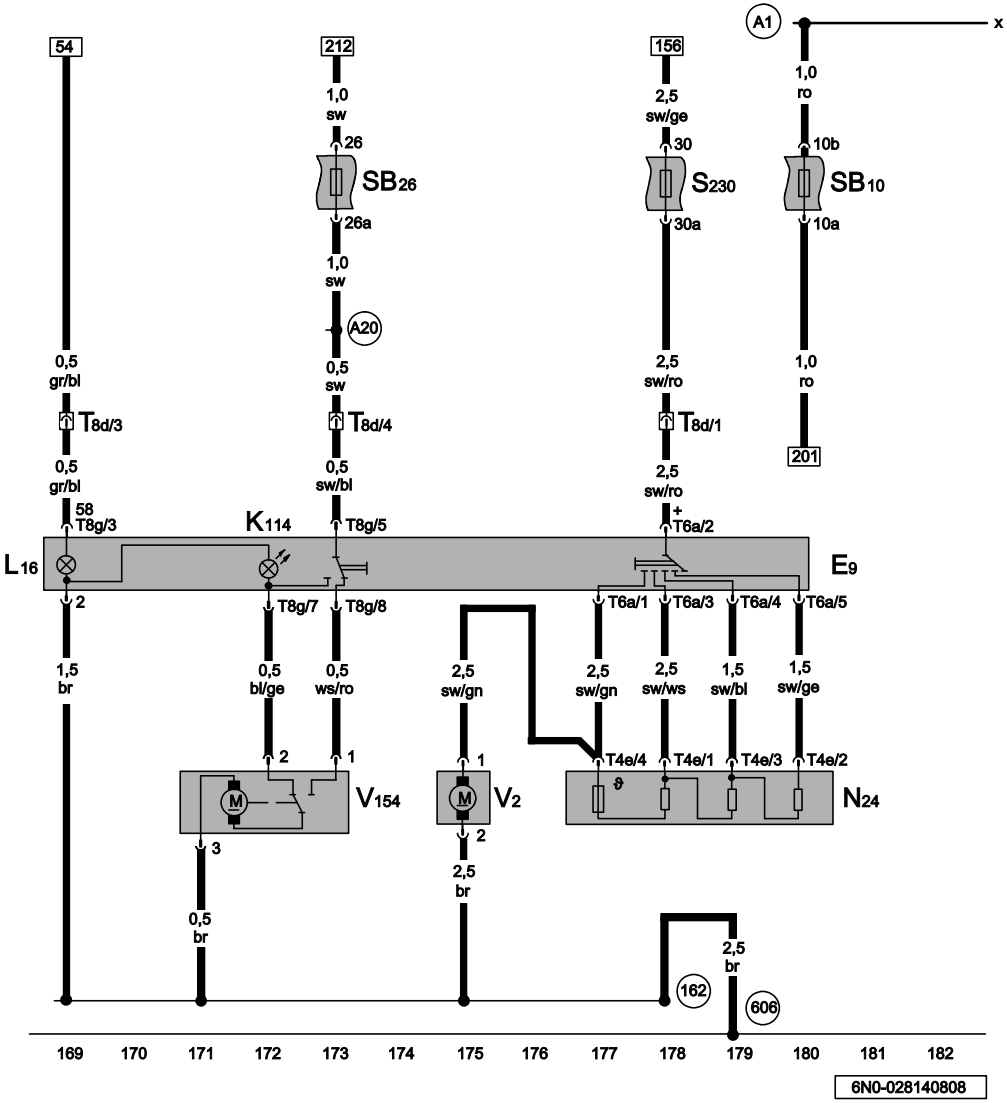

Fresh air blower, fresh air blower switch, fresh air/ recirculated air flap positioning motor

E9	Fresh air blower switch
L16	Fresh air regulator illumination bulb
K114	Fresh air and air recirculation warning lamp
N24	Fresh air blower series resistor with overheating fuse
SB10	Fuse 10 on fuse holder
SB26	Fuse 10 on fuse holder
S230	Fuse on fuse holder
T4e	4-pin connector, black, on fresh air blower series resistor
T6a	6-pin connector, black
T8d	8-pin connector, black, behind dash panel
T8g	8-pin connector
V2	Fresh air blower
V154	Fresh air and air recirculation flap control motor
162	Earth connection, in blower motor wiring harness
606	Earth point, under centre console near gear stick
A1	Positive connection (30a), in dash panel wiring harness
A20	Positive connection (15a), in dash panel wiring harness

ws	=	white
sw	=	black
ro	=	red
br	=	brown
gn	=	green
bl	=	blue
gr	=	grey
li	=	purple
ge	=	yellow
or	=	orange
rs	=	pink

Protected by copyright. Copying for private or commercial purposes, in part or in whole, is not permitted unless authorised by Volkswagen AG. Volkswagen AG does not guarantee or accept any liability with respect to the correctness of information in this document. Copyright by Volkswagen AG.
satelettronica

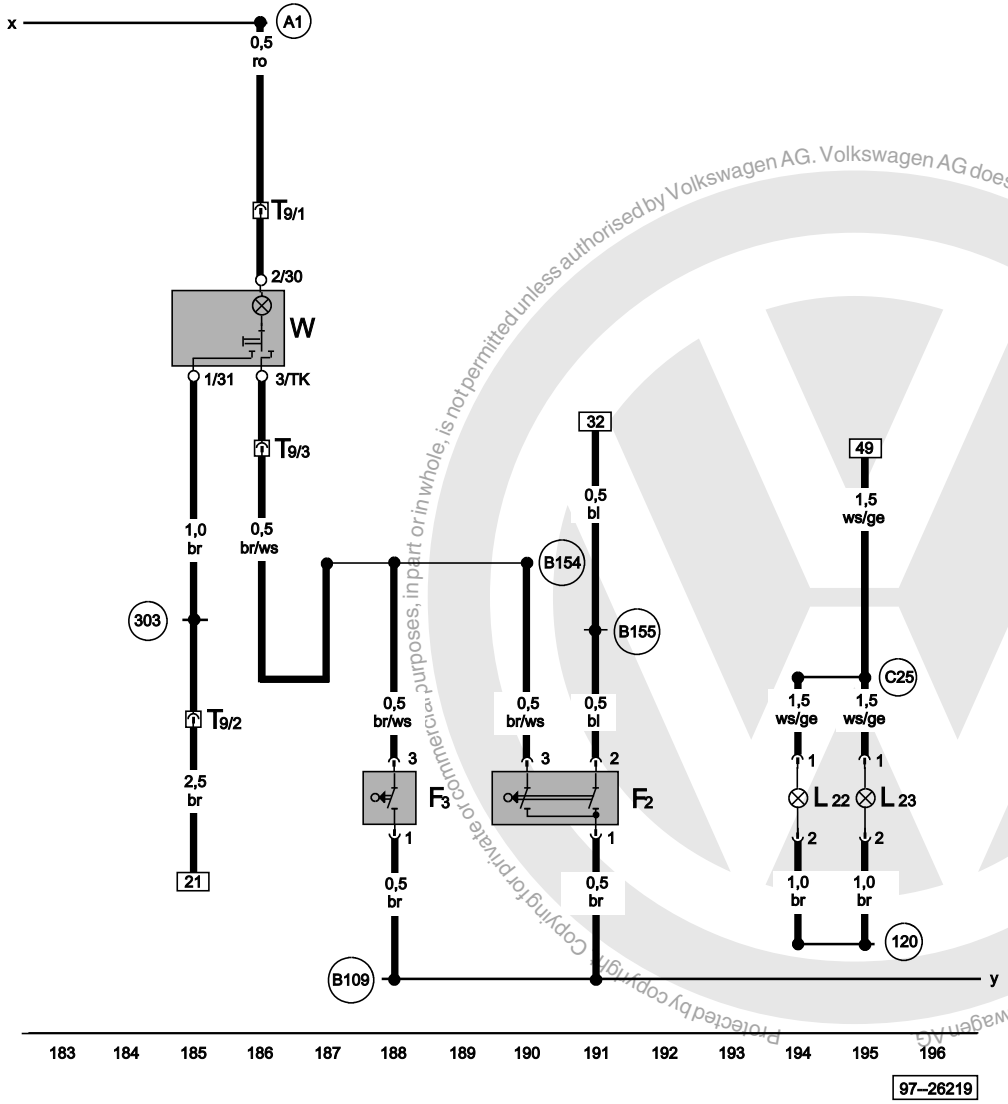

Interior light, door contact switch, fog light

F2	Driver door contact switch
F3	Front passenger door contact switch
L22	Left fog light bulb
L23	Right fog light bulb
T9	9-pin connector, in interior light wiring harness
W	Front interior light
120	Earth connection 2, in headlight wiring harness
303	Earth connection rain sensor/mirror, in interior wiring harness
A1	Positive connection (30a), in dash panel wiring harness
B109	Earth connection, in rear left interior wiring harness
B154	Connection 1 (DCt), in interior wiring harness
B155	Connection 2 (DCt), in interior wiring harness
C25	Connection (fog light), in front lighting wiring harness

ws	=	white
sw	=	black
ro	=	red
br	=	brown
gn	=	green
bl	=	blue
gr	=	grey
li	=	purple
ge	=	yellow
or	=	orange
rs	=	pink

Protected by copyright. Copying for private or commercial purposes, in part or in whole, is not permitted unless authorised by Volkswagen AG. Volkswagen AG does not guarantee or accept any liability with respect to the correctness of information in this document. Copyright by Volkswagen AG

satelettronica

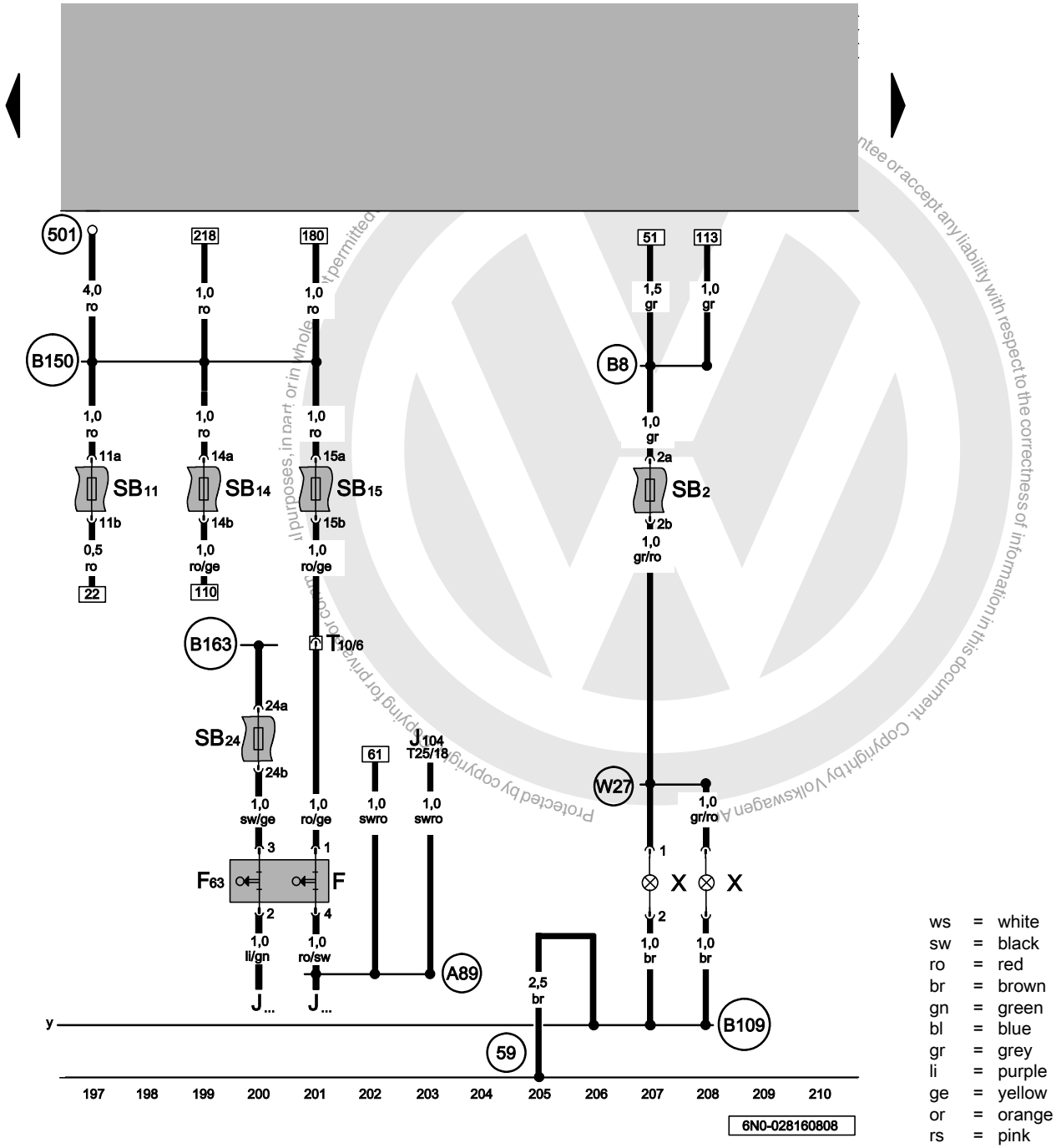

Brake light switch, number plate light

F	Brake light switch
F63	Brake pedal switch
J...	Engine control units
J104	ABS control unit
SB2	Fuse 2 in relay plate fuse holder
SB11	Fuse 11 in relay plate fuse holder
SB14	Fuse 14 in relay plate fuse holder
SB15	Fuse 15 in relay plate fuse holder
SB24	Fuse 24 in relay plate fuse holder
T10	10-pin connector, white, near relay station
T25	25-pin connector
X	Number plate light
59	Earth point, near left tail light
501	Screw connection 2 (30), on relay plate
A89	Connection 2 (54) in dash panel wiring harness
B8	Positive connection (58), in light switch wiring harness
B109	Earth connection, in rear left interior wiring harness
B150	Positive connection 2 (30a), in interior wiring harness
B163	Positive connection 1 (15), in interior wiring harness
W27	Positive connection (58), in tail lights wiring harness

ws	=	white
sw	=	black
ro	=	red
br	=	brown
gn	=	green
bl	=	blue
gr	=	grey
li	=	purple
ge	=	yellow
or	=	orange
rs	=	pink

satelettronica

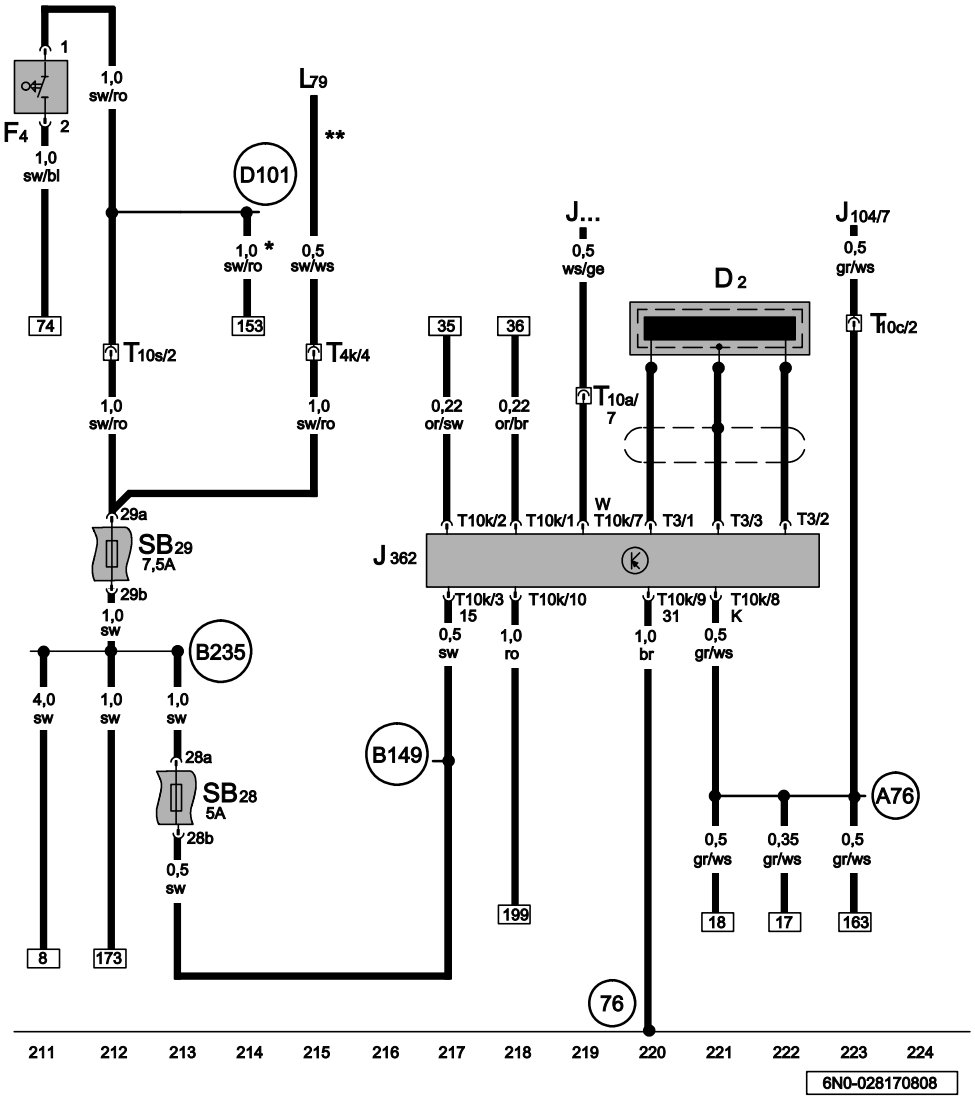

Immobilizer, reversing light switch, immobilizer reader coil, immobiliser control unit, reversing light switch

D2	Reader coil
F4	Reversing light switch
L79	Selector lever illumination
J...	Injection system control units
J104	ABS control unit, on left in engine compartment
J362	Immobilizer control unit, next to steering column
SB28	Fuse 28 in relay plate fuse holder
SB29	Fuse 29 in relay plate fuse holder
T3	3-pin connector, black, on immobilizer control unit
T4k	4-pin connector, black (LHD)
T10a	10-pin connector, black, near relay station
T10c	10-pin connector, near relay station
T10k	10-pin connector, black
T10s	10-pin connector, near relay station
76	Earth point, near selector mechanism
A76	Connection (K-diagnosis wire), in dash panel wiring harness
B149	Positive connection 2 (15a), in interior wiring harness
B235	Positive connection 4 (15a), in interior wiring harness
D101	Connection 1, in engine compartment wiring harness
*	Only models with a petrol engine
**	Only models with an automatic gearbox

ws	=	white
sw	=	black
ro	=	red
br	=	brown
gn	=	green
bl	=	blue
gr	=	grey
li	=	purple
ge	=	yellow
or	=	orange
rs	=	pink

Protected by copyright. Copying for private or commercial purposes, in part or in whole, is not permitted unless authorised. Volkswagen AG does not guarantee or accept any liability with respect to the correctness of information in this document. Copyright by Volkswagen AG.
satelettronica

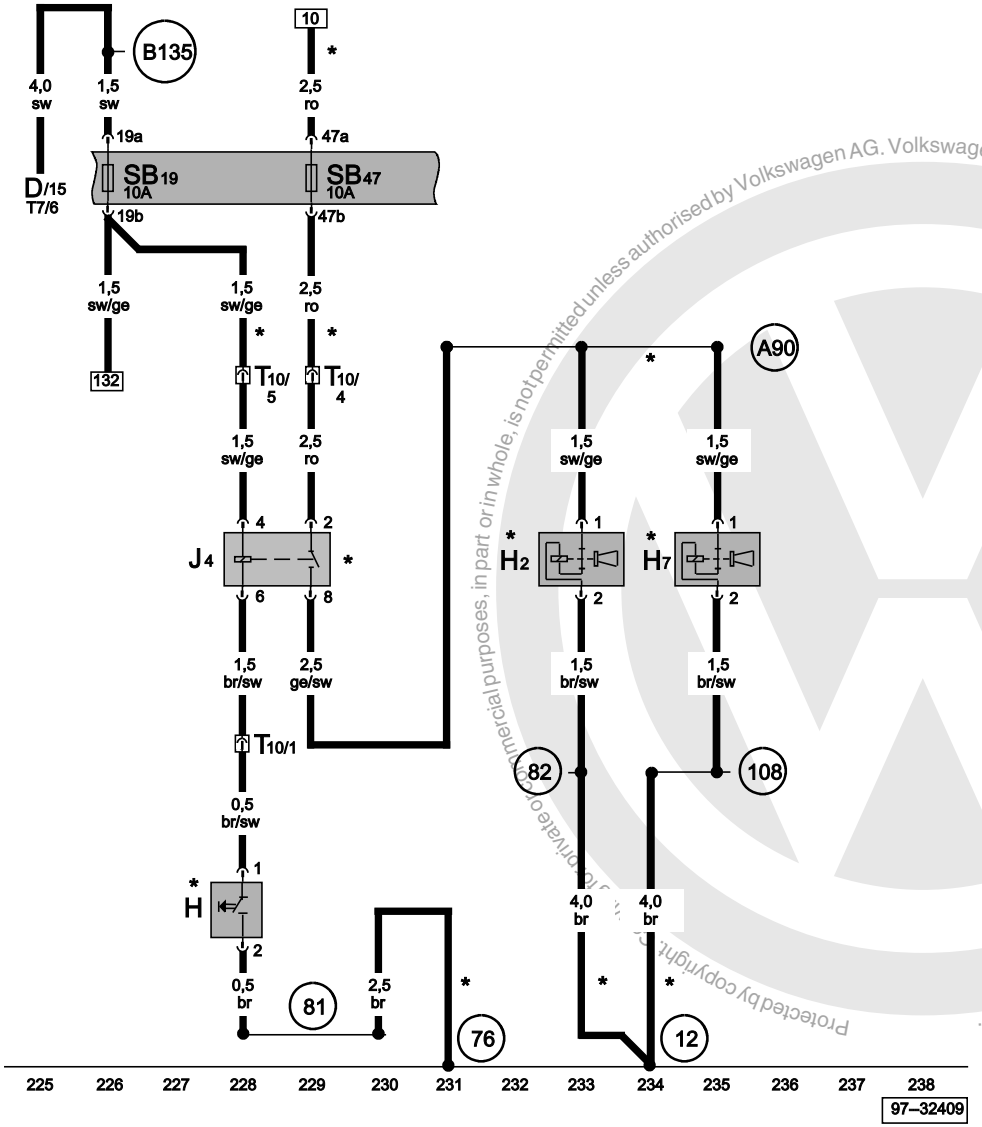

Horn plate, dual tone horn, treble tone horn, bass tone horn, dual tone horn relay, fuses

D	Ignition/starter switch
E22	Intermittent wiper switch
H	Horn plate
H1	Horn or dual tone horn
H2	Treble horn
H7	Bass horn
J4	Dual tone horn relay
SB19	Fuse 19 on fuse holder
SB47	Fuse 47 on fuse holder
T7	7-pin connector, on windscreen wiper switch
T10	10-pin connector, white, coupling station under relay carrier
12	Earth point, on left in engine compartment
76	Earth point, near selector mechanism
81	Earth connection 1, in dash panel wiring harness
82	Earth connection 1, in front left wiring harness
108	Earth connection 2, in front left wiring harness
A90	Connection (dual tone horn), in dash panel wiring harness
B135	Connection 1 (15a), in interior wiring harness
*	Only GTI

ws	=	white
sw	=	black
ro	=	red
br	=	brown
gn	=	green
bl	=	blue
gr	=	grey
li	=	purple
ge	=	yellow
or	=	orange
rs	=	pink

Protected by copyright. Copyright by Volkswagen AG. Volkswagen AG does not guarantee or accept any liability with respect to the correctness of information in this document. Copying for private or commercial purposes, in part or in whole, is not permitted unless authorised by Volkswagen AG.

satelettronica

1.0 l/37 kW Motronic, engine codes ALD, AUC
From October 1999

1.4 l/40 kW Motronic, engine codes AKP

1.4 l/44 kW Motronic, engine codes AKK, ANW, AUD
From October 1999

1.0 l/37 kW Motronic, engine codes ALD, from October 1999

1.4 l/44 kW Motronic, engine codes AKK, from October 1999

1.4 l/40 kW Motronic, engine codes AKP, from October 1999

For alternatives to relay and fuse positions as well as multi-pin connector wiring - see "Fitting locations" section.

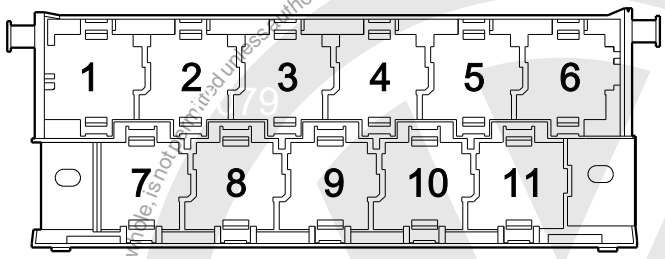

97-22850

Fuse colours

30 A - green
25 A - white
20 A - yellow
15 A - blue
10 A - red
7.5 A - brown
5 A - beige
3 A - purple

Protected by copyright. Copying for private or commercial purposes, in part or in whole, is not permitted unless authorised by Volkswagen AG. Volkswagen AG does not guarantee or accept any liability with respect to the correctness of information in this document. Copyright by Volkswagen AG.

satelettronica

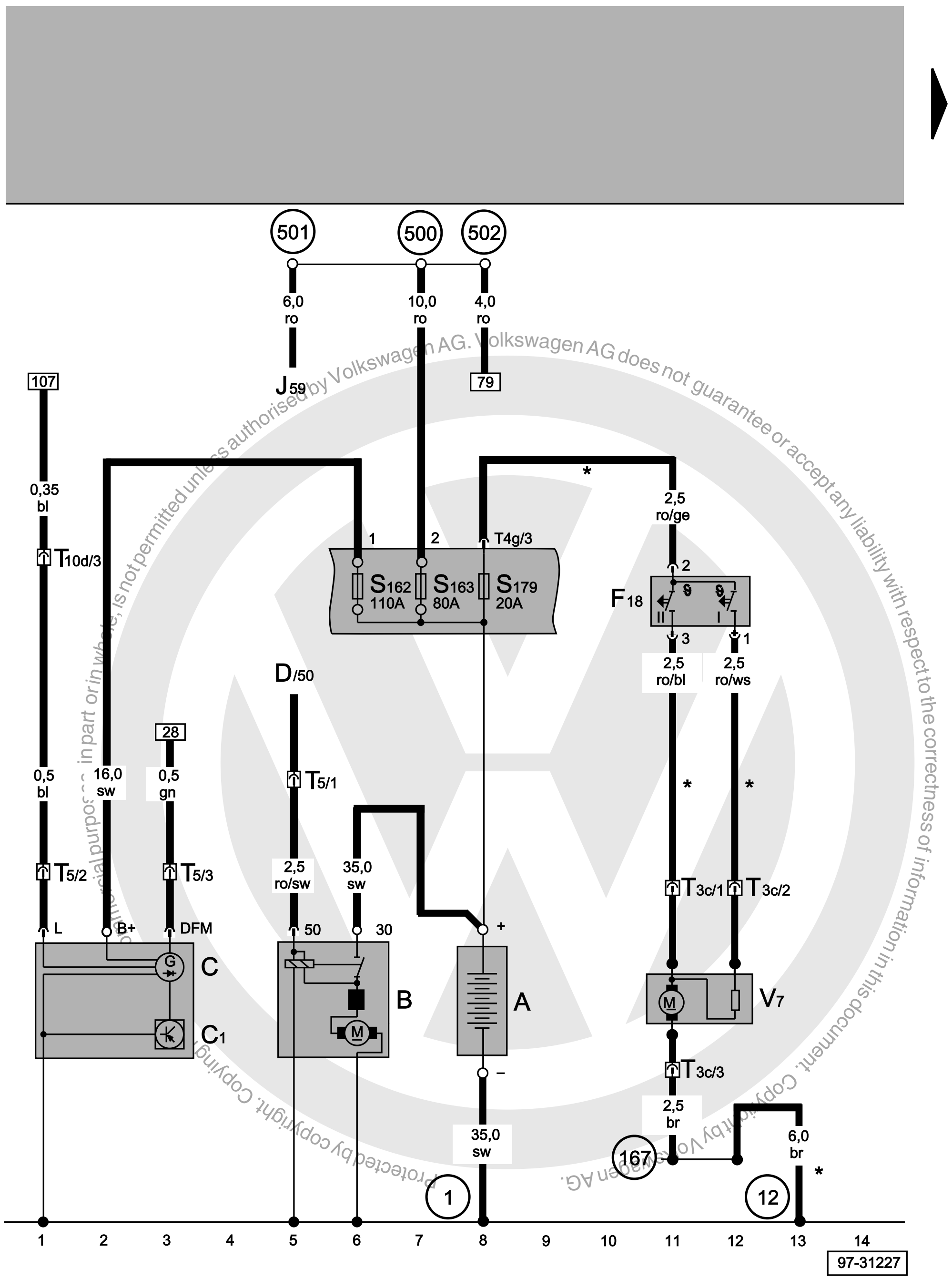

Protected by copyright. Copying for private or commercial purposes, in part or in whole, is not permitted unless authorised by Volkswagen AG. Volkswagen AG does not guarantee or accept any liability with respect to the correctness of information in this document. Copyright by Volkswagen AG.

Battery, alternator, voltage regulator, starter, radiator fan thermo-switch, radiator fan

A	Battery
B	Starter
C	Alternator
C1	Voltage regulator
D	Ignition/starter switch
F18	Radiator fan thermo-switch
J59	X contact relief relay
S162	Fuse -1- (30), in fuse box/battery
S163	Fuse -2- (30), in fuse box/battery
S179	Fuse -7- (30), in fuse box/battery
T3c	3-pin connector
T4g	4-pin connector, black
T5	5-pin connector
T10d	10-pin connector, red, connector point under relay carrier
V7	Radiator fan
1	Earth strap, battery - body
12	Earth point, in engine compartment, left
167	Earth connection -4-, in engine compartment wiring harness
500	Screw connection -1- (30), on relay plate
501	Screw connection -2- (30), on relay plate
502	Screw connection -3- (30), on relay plate
*	Not with models with air conditioner

ws	=	white
sw	=	black
ro	=	red
br	=	brown
gn	=	green
bl	=	blue
gr	=	grey
li	=	purple
ge	=	yellow
or	=	orange
rs	=	pink

satelettronica

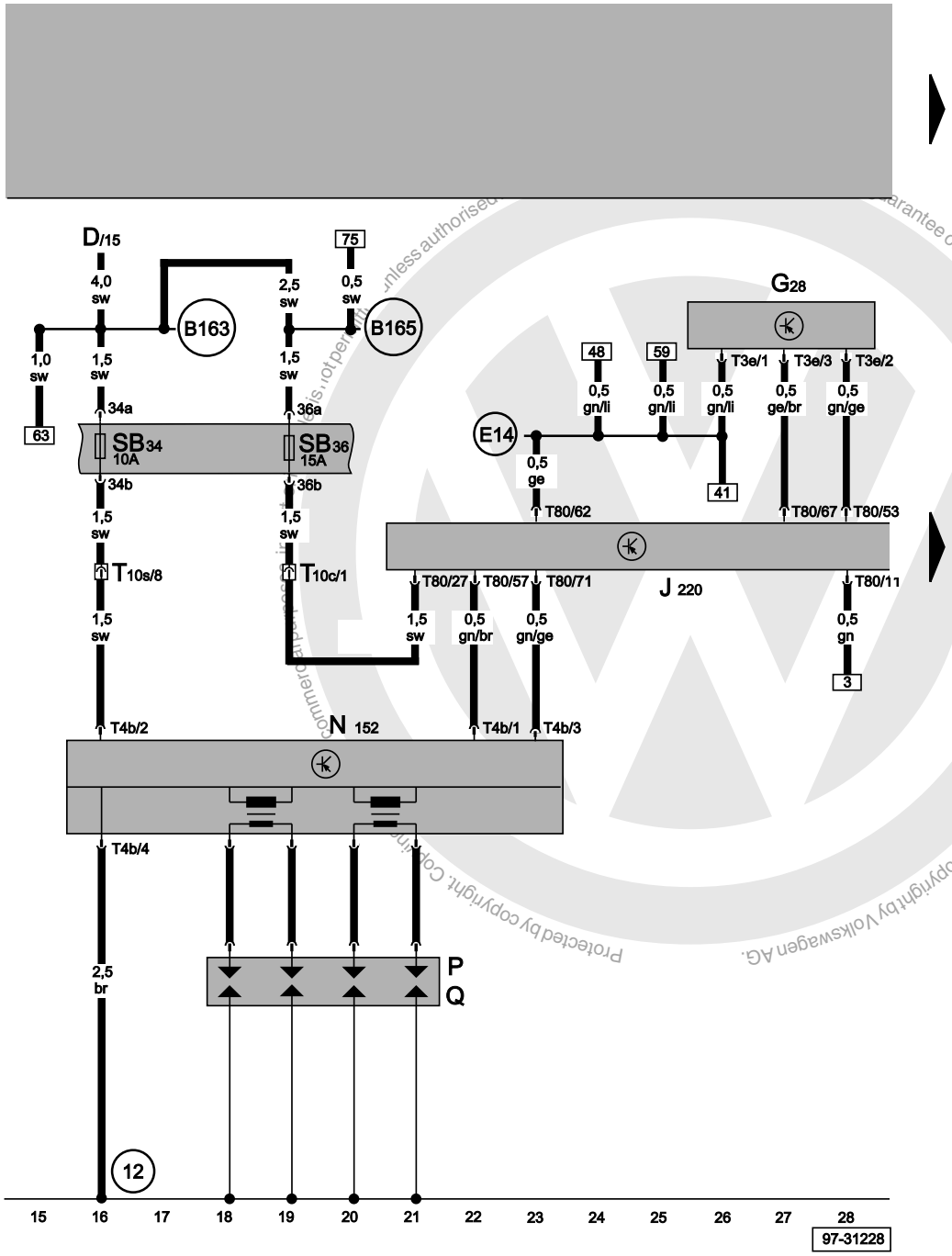

Motronic control unit, engine speed sender, ignition transformer, spark plug connector, spark plugs, fuses

D	Ignition/starter switch
G28	Engine speed sender
J220	Motronic control unit
N152	Ignition transformer
P	Spark plug connector
Q	Spark plugs
SB34	Fuse -34- in fuse box
SB36	Fuse -36- in fuse box
T3e	3-pin connector
T4b	4-pin connector, black
T10c	10-pin connector, blue, connector point under relay carrier
T10s	10-pin connector, light green, connector point under relay carrier
T80	80-pin connector
12	Earth point, in engine compartment, left
B163	Connection -1- (15), in interior wiring harness
B165	Connection -2- (15), in interior wiring harness
E14	Connection -1-, in Motronic wiring harness

ws	=	white
sw	=	black
ro	=	red
br	=	brown
gn	=	green
bl	=	blue
gr	=	grey
li	=	purple
ge	=	yellow
or	=	orange
rs	=	pink

Protected by copyright. Copyright by Volkswagen AG.

satelettronica

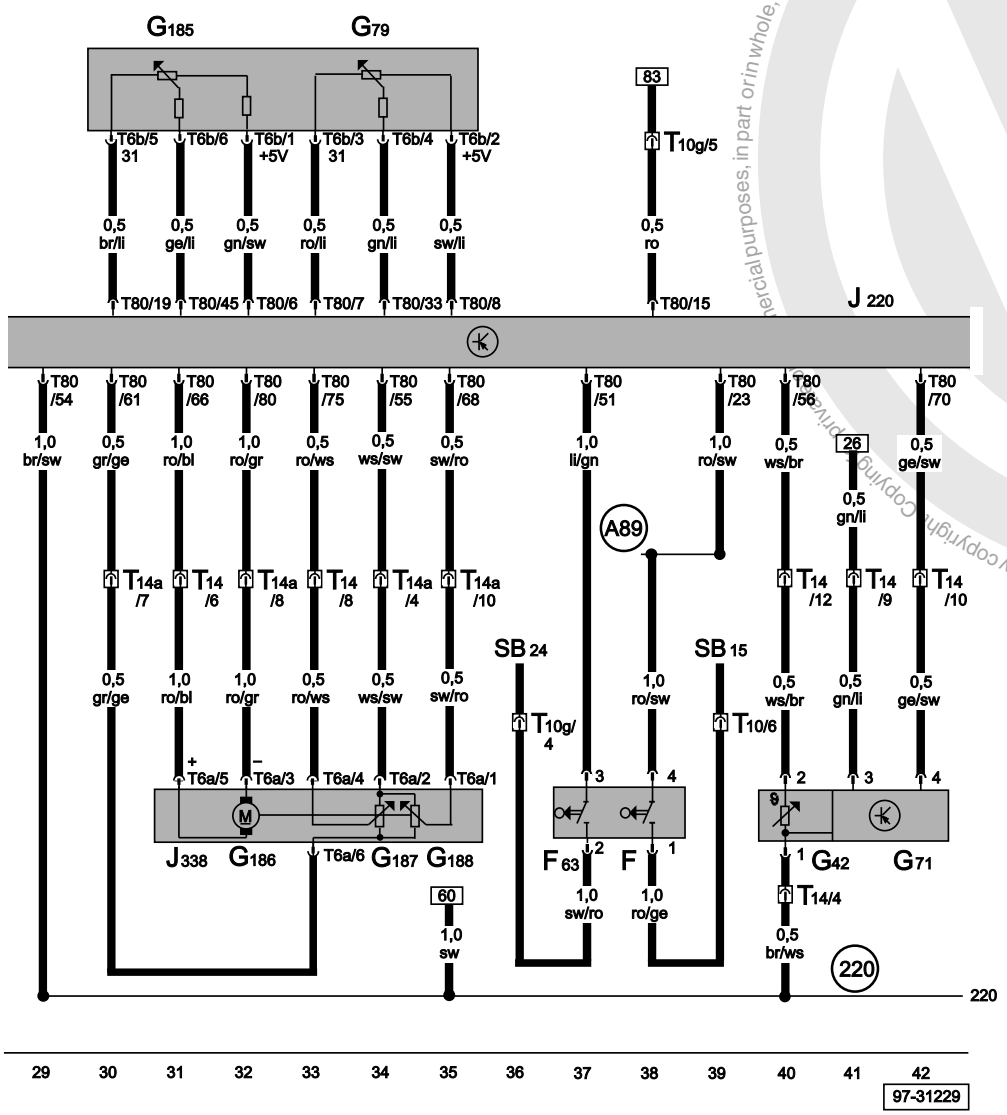

Motronic control unit, throttle valve control unit, pedal value sender, intake manifold pressure sender, intake air temperature sender, brake light switch, brake pedal switch

F	Brake light switch
F63	Brake pedal switch
G42	Intake air temperature sender
G71	Intake manifold pressure sender
G79	Accelerator pedal position sender
G185	Accelerator pedal position sender -2-
G186	Throttle valve drive (electric throttle operation)
G187	Throttle valve drive angle sender -1- (electric throttle operation)
G188	Throttle valve drive angle sender -2- (electric throttle operation)
J220	Motronic control unit
J338	Throttle valve control unit
SB15	Fuse -15- in fuse box
SB24	Fuse -24- in fuse box
T6a	6-pin connector
T6b	6-pin connector
T10	10-pin connector, white, connector point under relay carrier
T10g	10-pin connector, brown, connector point under relay carrier
T14	14-pin connector, black, on cylinder head, left
T14a	14-pin connector, brown, on cylinder head, left
T80	80-pin connector
220	Earth connection (sender earth), in engine wiring harness
A89	Connection -2- (54), in dash panel wiring harness

ws	=	white
sw	=	black
ro	=	red
br	=	brown
gn	=	green
bl	=	blue
gr	=	grey
li	=	purple
ge	=	yellow
or	=	orange
rs	=	pink

Protected by copyright. Copying for private or commercial purposes, in part or in whole, is not permitted without the prior written consent of Volkswagen AG. Volkswagen AG does not guarantee or accept any liability with respect to the correctness of information in this document. Copyright by Volkswagen AG.
satelettronica

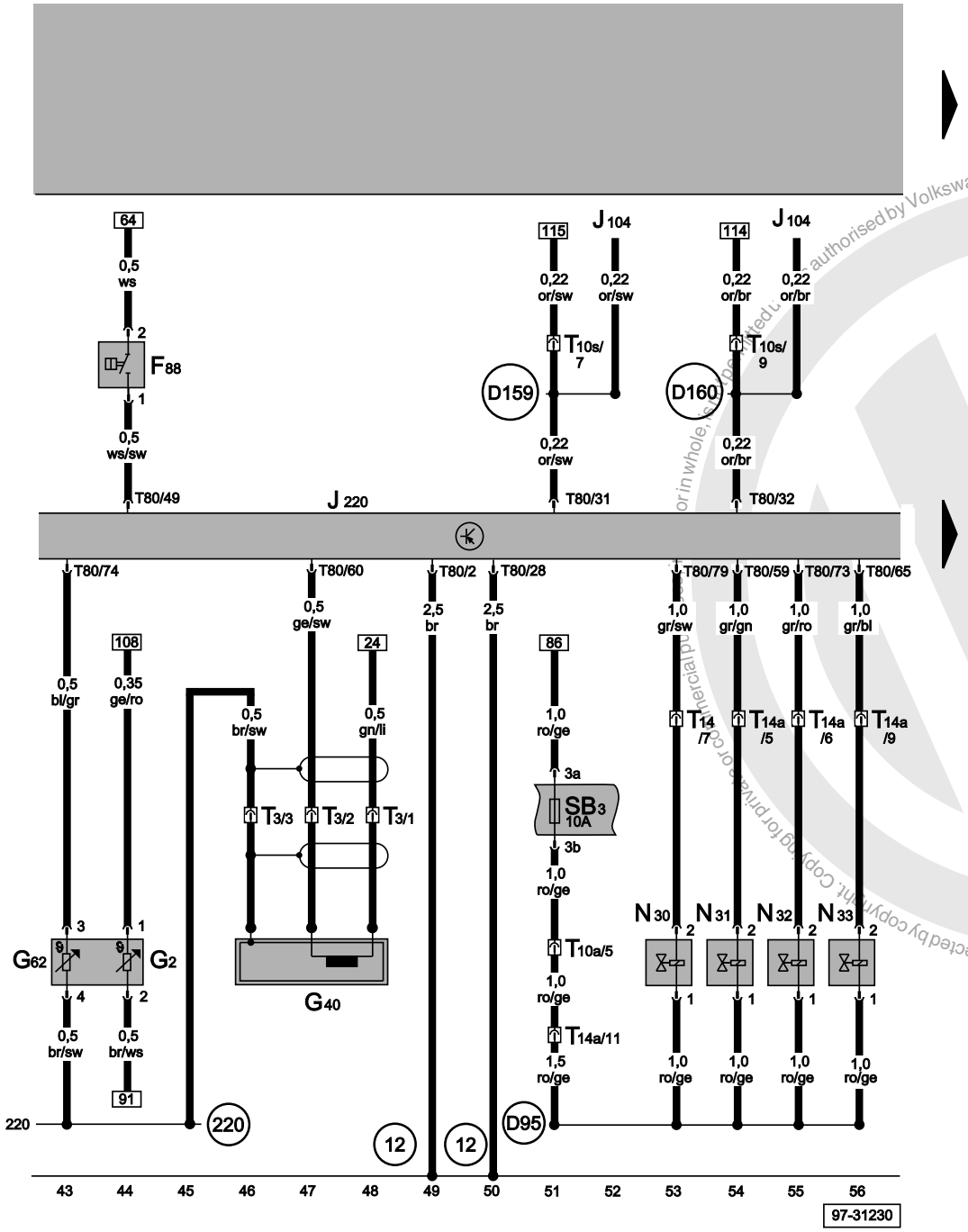

Motronic control unit, hall sender 1, coolant temperature sender, power assisted steering pressure switch, injectors

F88	Power assisted steering pressure switch
G2	Coolant temperature sender
G40	Hall sender I
G62	Coolant temperature sender
J104	ABS with EDL control unit
J220	Motronic control unit
N30	Injector, cylinder 1
N31	Injector, cylinder 2
N32	Injector, cylinder 3
N33	Injector, cylinder 4
SB3	Fuse -3- in fuse box
T3	3-pin connector
T10a	10-pin connector, green, connector point under relay carrier
T10s	10-pin connector, light green, connector point under relay carrier
T14	14-pin connector, black, on cylinder head, left
T14a	14-pin connector, brown, on cylinder head, left
T80	80-pin connector
12	Earth point, in engine compartment, left
220	Earth connection (sender earth), in engine wiring harness
D95	Connection (injectors), in engine compartment wiring harness
D159	Connection (high bus), in engine compartment wiring harness
D160	Connection (low bus), in engine compartment wiring harness

ws	=	white
sw	=	black
ro	=	red
br	=	brown
gn	=	green
bl	=	blue
gr	=	grey
li	=	purple
ge	=	yellow
or	=	orange
rs	=	pink

Protected by copyright. Copying for private or commercial purposes, in part or in whole, is not permitted unless authorised by Volkswagen AG. Volkswagen AG does not guarantee or accept any liability with respect to the correctness of information in this document. Copyright by Volkswagen AG.
satelettronica

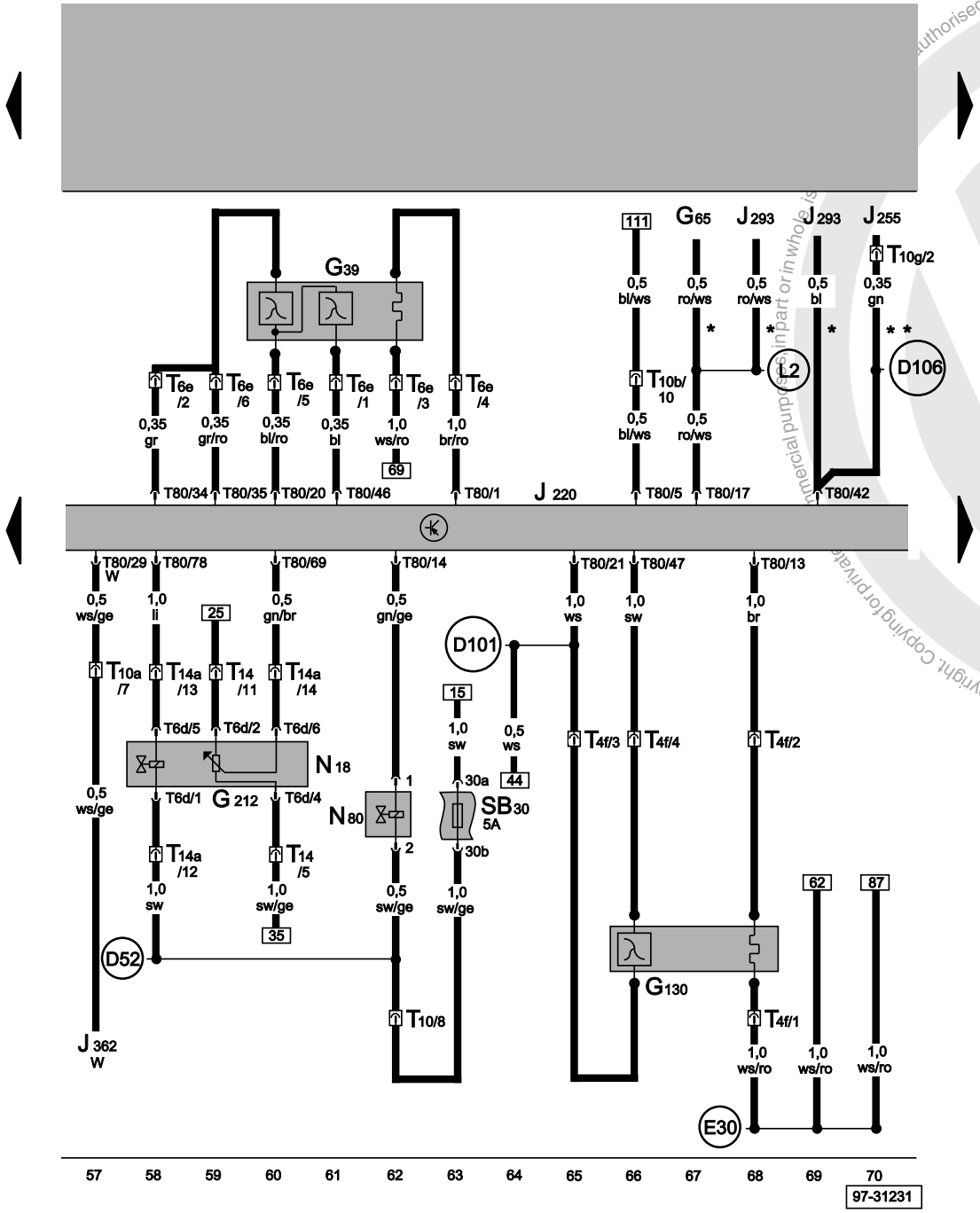

Motronic control unit, lambda probe I, lambda probe II, activated charcoal filter system solenoid valve, exhaust gas recirculation potentiometer, exhaust gas recirculation valve

G39	Lambda probe before catalyst
G65	High pressure sender
G130	Lambda probe after catalyst
G212	Exhaust gas recirculation potentiometer
J220	Motronic control unit
J255	Climatronic control unit
J293	Radiator fan control unit
J362	Immobilizer control unit
N18	Exhaust gas recirculation valve
N80	Activated charcoal filter system solenoid valve 1
SB30	Fuse -30- in fuse box
T4f	4-pin connector, black
T6d	6-pin connector
T6e	6-pin connector
T10	10-pin connector, white
T10a	10-pin connector, green
T10b	10-pin connector, black
T10g	10-pin connector
T14	14-pin connector, black
T14a	14-pin connector, brown
T80	80-pin connector
D52	Positive (+) connection (15a), in engine compartment wiring harness
D101	Connection -15, in engine compartment wiring harness
D106	Connection -4-, in engine compartment wiring harness
E30	Connection (87a), in engine wiring harness
L2	Connection, in air conditioner wiring harness
*	Only models with air conditioner (manual)
**	Only models with Climatronic

ws	=	white
sw	=	black
ro	=	red
br	=	brown
gn	=	green
bl	=	blue
gr	=	grey
li	=	purple
ge	=	yellow
or	=	orange
rs	=	pink

Protected by copyright. Copying for private or commercial purposes, in part or in whole, is not permitted unless authorised by Volkswagen AG. Volkswagen AG does not guarantee or accept any liability with respect to the correctness of information in this document. Copyright by Volkswagen AG.
satelettronica

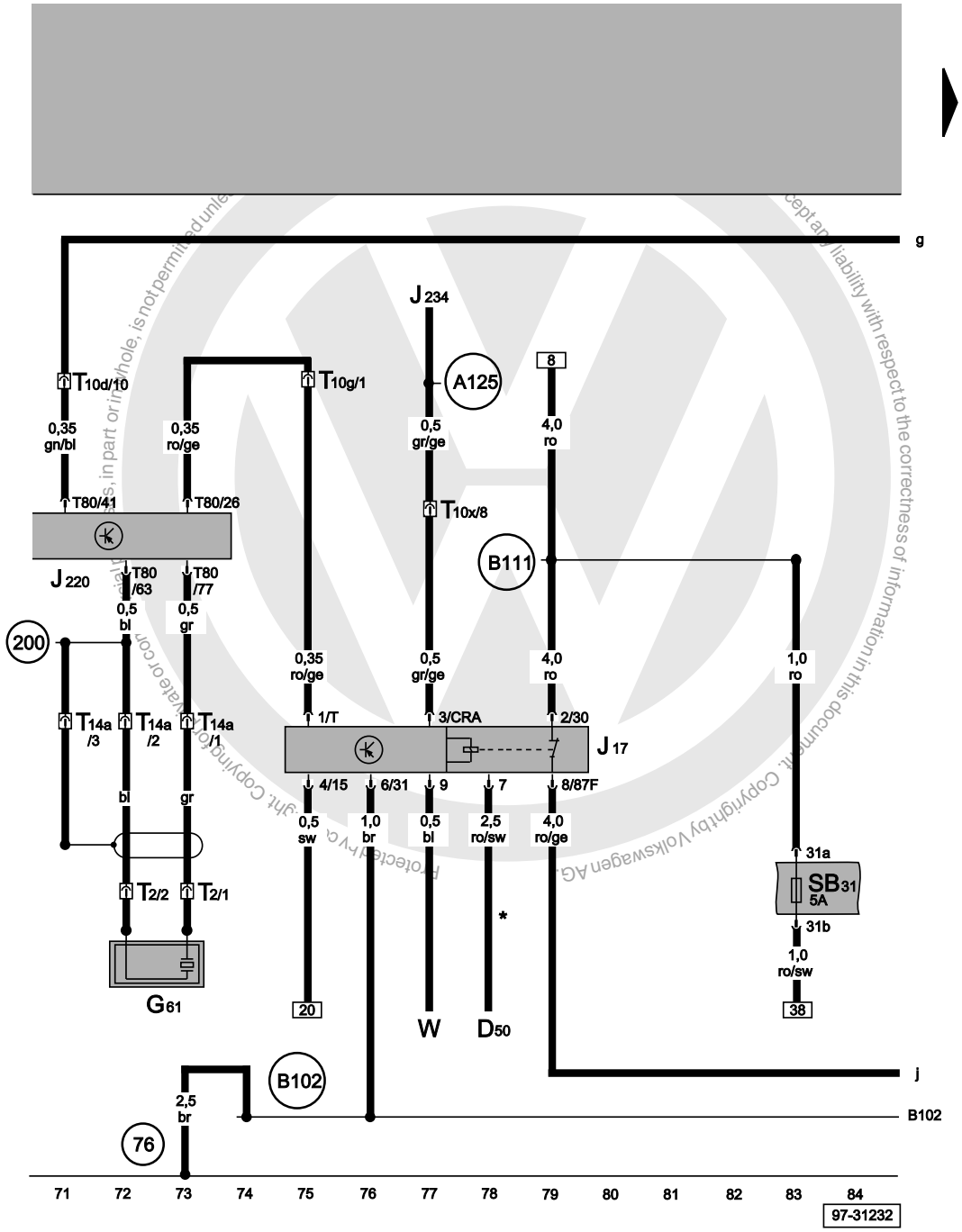

Motronic control unit, knock sensor, fuel pump relay (crash)

D	Ignition/starter switch
G61	Knock sensor
J17	Fuel pump relay
J220	Motronic control unit
J234	Airbag control unit
SB31	Fuse -31- in fuse box
T2	2-pin connector, black
T10d	10-pin connector, red, connector point under relay carrier
T10g	10-pin connector, brown, connector point under relay carrier
T10x	10-pin connector, connector point under relay carrier
T14a	14-pin connector, brown, on cylinder head, left
T80	80-pin connector
W	Interior light, front
76	Earth point, near selector mechanism
200	Earth connection (screening), in engine compartment wiring harness
A125	Connection (crash signal), in dash panel wiring harness
B102	Earth connection, in front left interior wiring harness
B111	Positive (+) connection -1- (30a), in interior wiring harness
*	Not with models with automatic gearbox

ws	=	white
sw	=	black
ro	=	red
br	=	brown
gn	=	green
bl	=	blue
gr	=	grey
li	=	purple
ge	=	yellow
or	=	orange
rs	=	pink

satelettronica

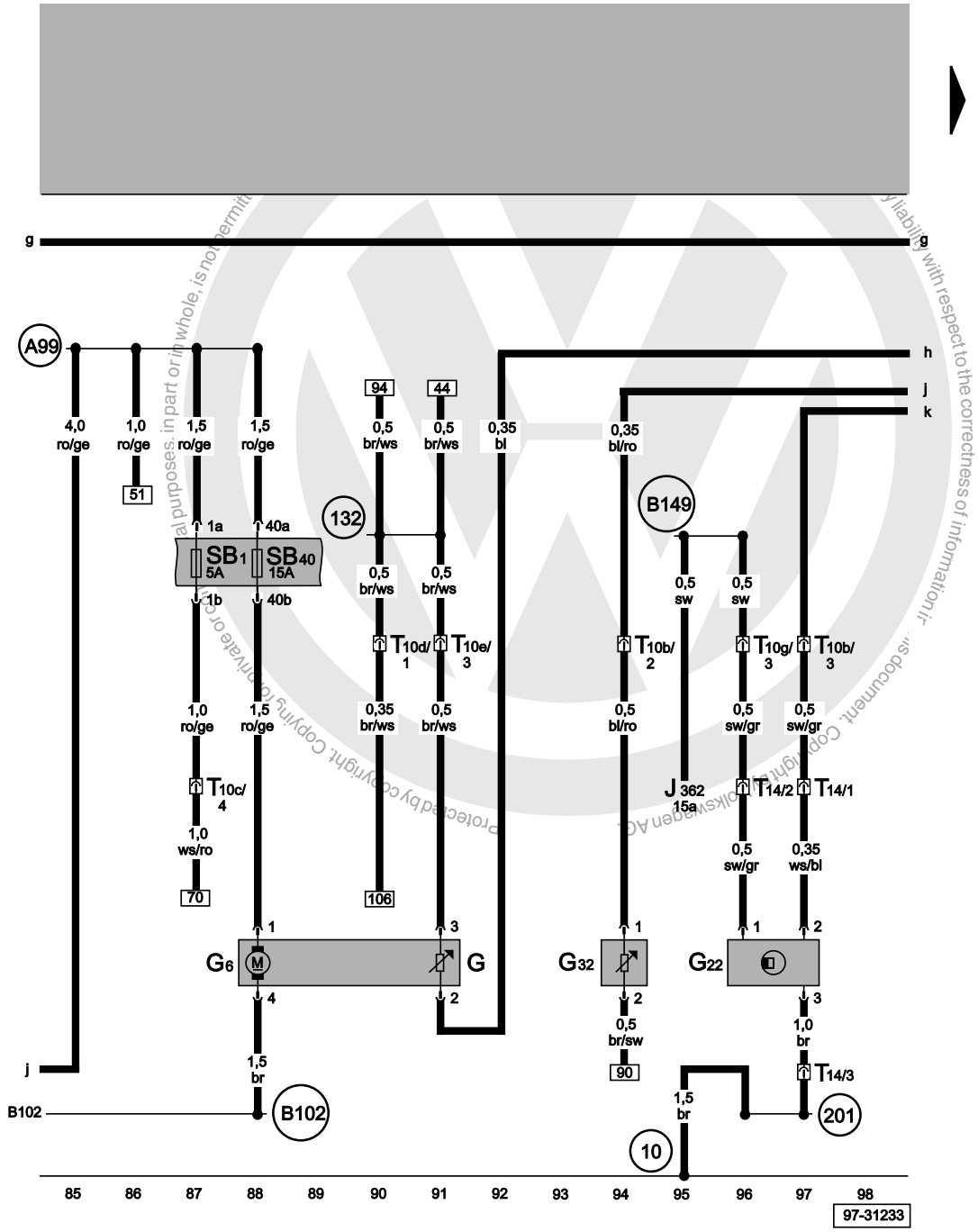

Fuel pump, speedometer sender, fuel gauge sender, coolant shortage indicator sender

G	Fuel gauge sender
G6	Fuel pump
G22	Speedometer sender (hall sender, on gearbox)
G32	Coolant shortage indicator sender
J362	Immobilizer control unit
SB1	Fuse -1- in fuse box
SB40	Fuse -40- in fuse box
T10b	10-pin connector, black, connector point under relay carrier
T10c	10-pin connector, blue, connector point under relay carrier
T10d	10-pin connector, red, connector point under relay carrier
T10e	10-pin connector, light pink, connector point under relay carrier
T10g	10-pin connector, brown, connector point under relay carrier
T14	14-pin connector, black, on cylinder head, left
10	Earth point, in plenum chamber
132	Earth connection -3-, in engine compartment wiring harness
201	Earth connection -5-, in engine compartment wiring harness
A99	Connection -1- (87), in dash panel wiring harness
B102	Earth connection, in interior wiring harness, front left
B149	Positive (+) connection -2- (15a), in interior wiring harness

ws	=	white
sw	=	black
ro	=	red
br	=	brown
gn	=	green
bl	=	blue
gr	=	grey
li	=	purple
ge	=	yellow
or	=	orange
rs	=	pink

satelettronica

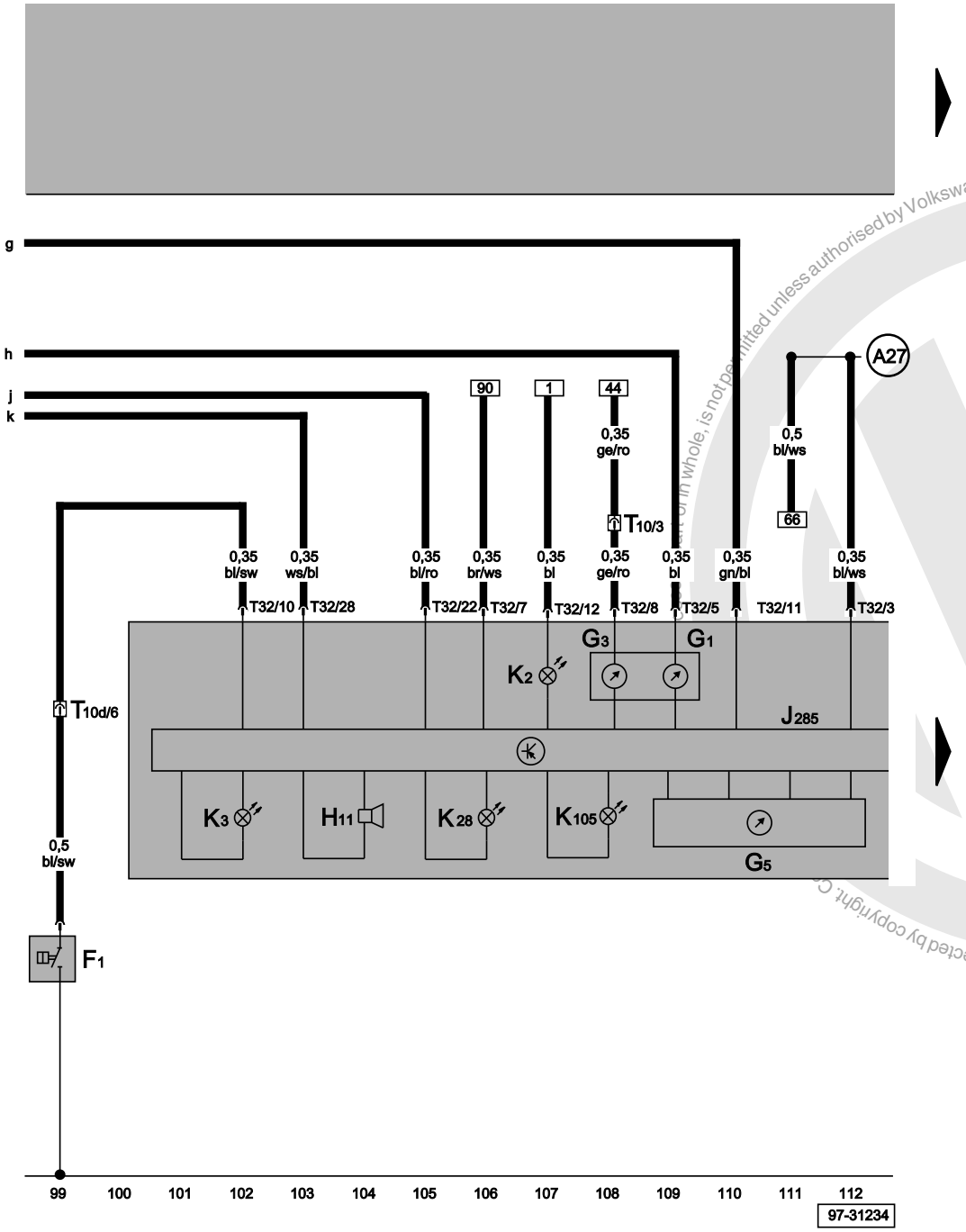

Dash panel insert, oil pressure warning, coolant temperature gauge, fuel gauge, rev. counter, warning lamps

F1	Oil pressure switch
G1	Fuel gauge
G3	Coolant temperature gauge
G5	Rev. counter
H11	Oil pressure warning buzzer
J285	Control unit with display in dash panel insert
K2	Alternator warning lamp
K3	Oil pressure warning lamp
K28	Coolant temperature/coolant shortage warning lamp
K105	Reserve fuel warning lamp
T10	10-pin connector, white, connector point under relay carrier
T10d	10-pin connector, red, connector point under relay carrier
T32	32-pin connector, blue
A27	Connection (speed signal), in dash panel wiring harness

ws	=	white
sw	=	black
ro	=	red
br	=	brown
gn	=	green
bl	=	blue
gr	=	grey
li	=	purple
ge	=	yellow
or	=	orange
rs	=	pink

Protected by copyright. Copyright by Volkswagen AG. Volkswagen AG does not guarantee or assume any liability with respect to the correctness of information in this document. Copyright by Volkswagen AG. Or in whole, is not permitted unless authorised by Volkswagen AG.
satelettronica

Dash panel insert, self-diagnosis connection, data bus diagnostic interface

J362	Immobilizer control unit
J285	Control unit with display in dash panel insert
J533	Data bus diagnostic interface control unit
T16	16-pin connector, self-diagnosis connection
T32	32-pin connector, blue
T32a	32-pin connector, green
A76	Connection (diagnosis wire K), in dash panel wiring harness
A121	Connection (high bus), in dash panel wiring harness
A122	Connection (low bus), in dash panel wiring harness

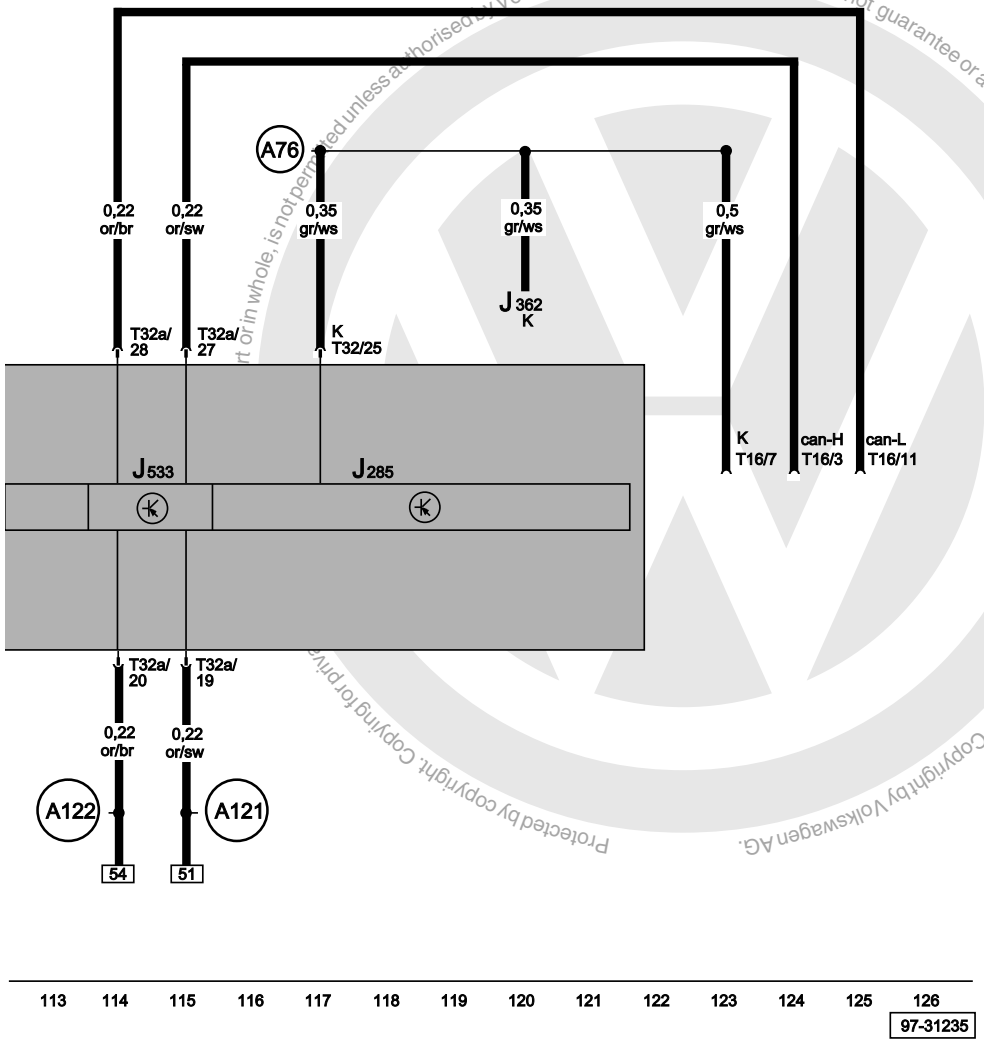

ws	=	white
sw	=	black
ro	=	red
br	=	brown
gn	=	green
bl	=	blue
gr	=	grey
li	=	purple
ge	=	yellow
or	=	orange
rs	=	pink

Protected by copyright. Copying for priv... or in whole, is not permitted unless authorised by Volkswagen AG. Volkswagen AG does not guarantee or accept any liability with respect to the correctness of information in this document. Copyright by Volkswagen AG.

satelettronica

⇒ 1.4 l/55 kW - 4LV, engine codes APE, AUA
⇒ 1.4 l/74 kW - 4LV, engine codes AUB, AQQ
From October 1999

For alternatives to relay and fuse positions as well as multi-pin connector wiring - see "Fitting locations" section.

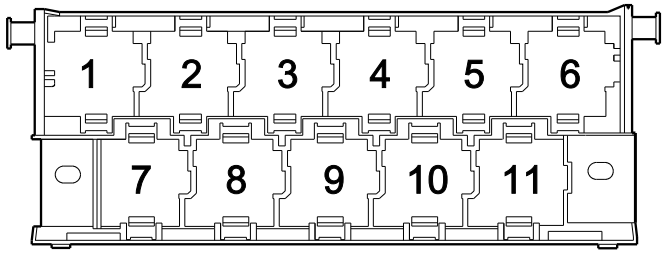

97-22850

Fuse colours

30 A - green
25 A - white
20 A - yellow
15 A - blue
10 A - red
7.5 A - brown
5 A - beige
3 A - purple

Protected by copyright. Copying for private or commercial purposes, in part or in whole, is not permitted unless authorised by Volkswagen AG. Volkswagen AG does not guarantee or accept any liability with respect to the correctness of information in this document. Copyright by Volkswagen AG.

satelettronica

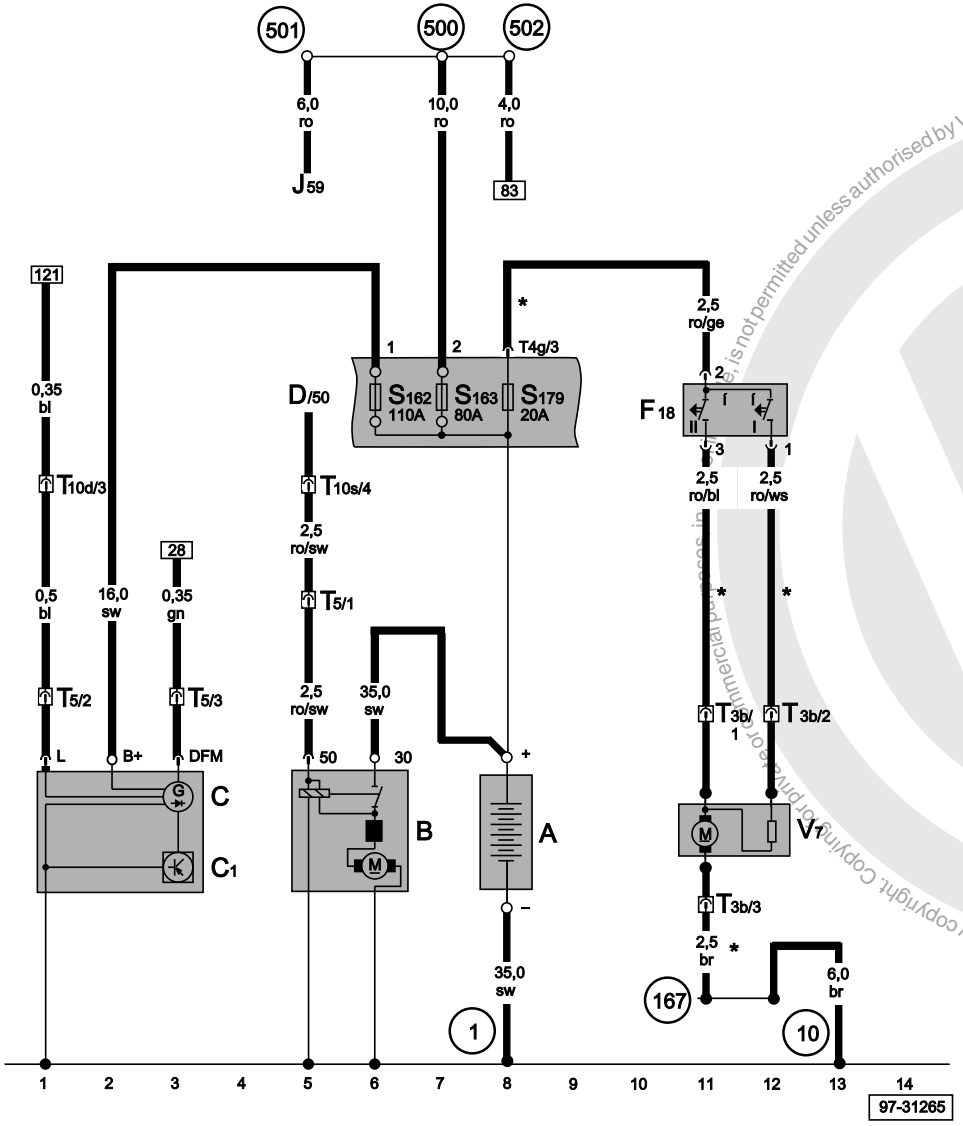

Battery, alternator, voltage regulator, starter, radiator fan thermo-switch, radiator fan

A	Battery
B	Starter
C	Alternator
C1	Voltage regulator
D	Ignition/starter switch
F18	Radiator fan thermo-switch
J59	X contact relief relay
S162	Fuse -1- (30), in fuse box/battery
S163	Fuse -2- (30), in fuse box/battery
S179	Fuse -7- (30), in fuse box/battery
T3b	3-pin connector
T4g	4-pin connector, black
T5	5-pin connector
T10d	10-pin connector, red, connector point under relay carrier
T10s	10-pin connector, light green, connector point under relay carrier
V7	Radiator fan
1	Earth strap, battery - body
10	Earth point, in plenum chamber
167	Earth connection -4-, in engine compartment wiring harness
500	Screw connection -1- (30), on relay plate
501	Screw connection -2- (30), on relay plate
502	Screw connection -3- (30), on relay plate
*	Not with models with air conditioner

ws	=	white
sw	=	black
ro	=	red
br	=	brown
gn	=	green
bl	=	blue
gr	=	grey
li	=	purple
ge	=	yellow
or	=	orange
rs	=	pink

Protected by copyright. Copying or printing in this document, is not permitted unless authorised by Volkswagen AG. Volkswagen AG does not guarantee or accept any liability with respect to the correctness of the information in this document. Copyright by Volkswagen AG.

satelettronica

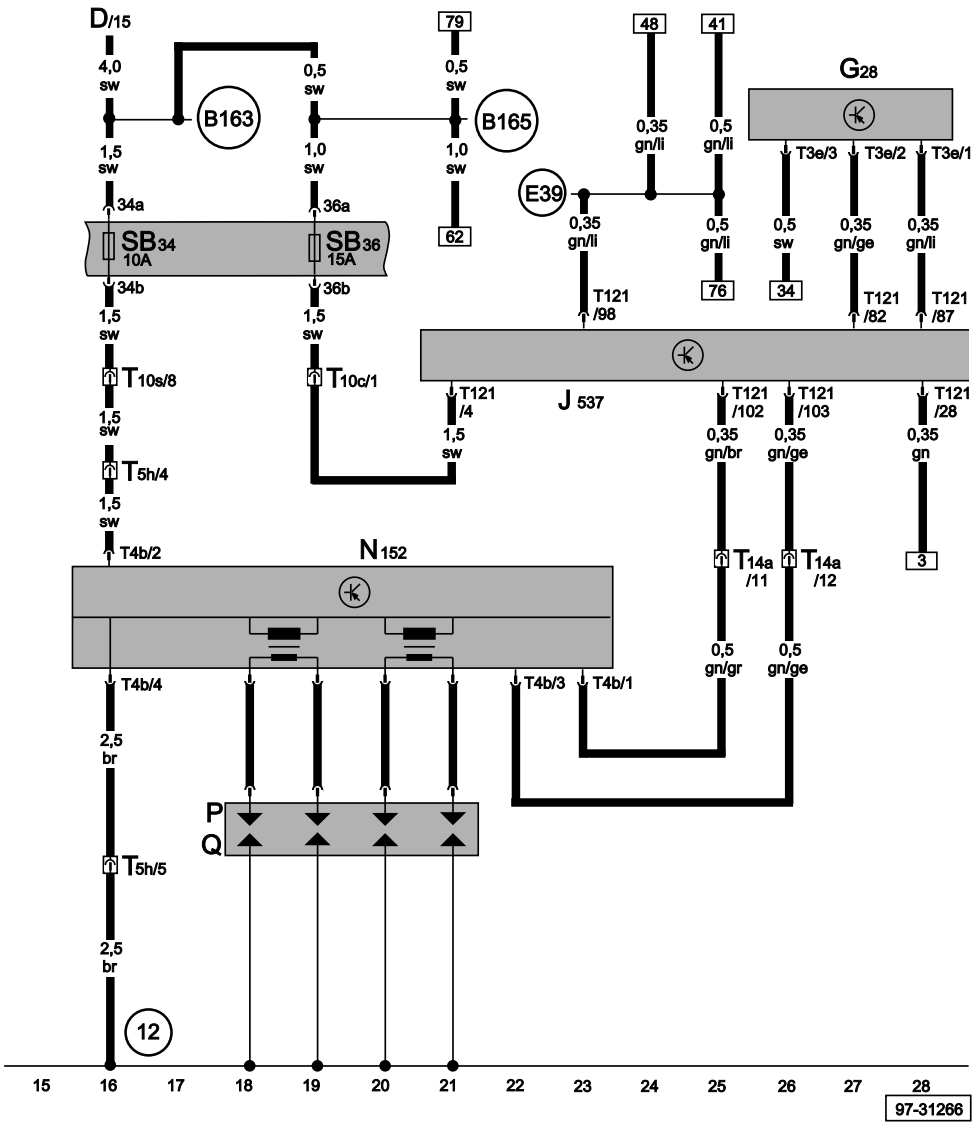

4LV control unit (injection system), engine speed sender, spark plug connector, spark plugs

D	Ignition/starter switch
G28	Engine speed sender
J537	4LV control unit (injection system)
N152	Ignition transformer
P	Spark plug connector
Q	Spark plugs
SB34	Fuse -34- in fuse box
SB36	Fuse -36- in fuse box
T3e	3-pin connector
T4b	4-pin connector, black
T5h	5-pin connector, on cylinder head, left
T10c	10-pin connector, blue, connector point under relay carrier
T10s	10-pin connector, light green, connector point under relay carrier
T14a	14-pin connector, brown, on cylinder head, left
T121	121-pin connector
12	Earth point, in engine compartment, left
B163	Positive (+) connection -1- (15), in interior wiring harness
B165	Positive (+) connection -2- (15), in interior wiring harness
E39	Connection, in 4LV wiring harness

ws	=	white
sw	=	black
ro	=	red
br	=	brown
gn	=	green
bl	=	blue
gr	=	grey
li	=	purple
ge	=	yellow
or	=	orange
rs	=	pink

Protected by copyright. Copying for private or commercial purposes, in part or in whole, is not permitted unless authorised by Volkswagen AG. Volkswagen AG does not guarantee or accept any liability with respect to the correctness of information in this document. Copyright by Volkswagen AG.
satelettronica

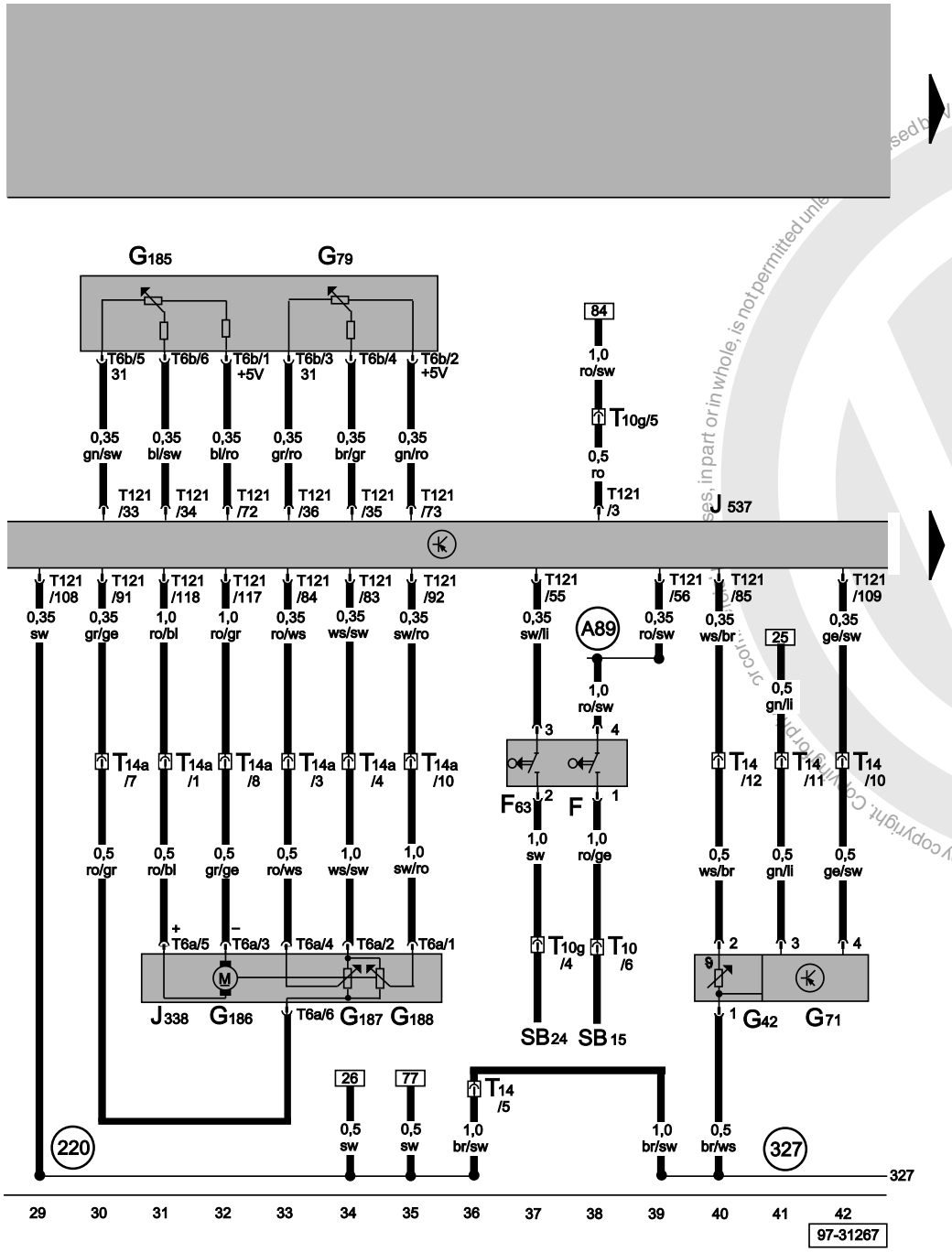

4LV control unit (injection system), throttle valve control unit, accelerator pedal position sender, intake manifold pressure sender, intake manifold temperature sender, brake light switch, brake pedal switch

F	Brake light switch
F63	Brake pedal switch
G42	Intake air temperature sender
G71	Intake manifold pressure sender
G79	Accelerator pedal position sender
G185	Accelerator pedal position sender -2-
G186	Throttle valve drive (electric throttle operation)
G187	Throttle valve drive angle sender -1-
G188	Throttle valve drive angle sender -2-
J338	Throttle valve control unit
J537	4LV control unit (injection system)
SB15	Fuse -15- in fuse box
SB24	Fuse -24- in fuse box
T6a	6-pin connector, black
T6b	6-pin connector
T10	10-pin connector, white, connector point under relay carrier
T10g	10-pin connector, brown, connector point under relay carrier
T14	14-pin connector, black, on cylinder head, left
T14a	14-pin connector, brown, on cylinder head, left
T121	121-pin connector
220	Earth connection (sender earth), in engine wiring harness
A89	Connection -2- (54), in dash panel wiring harness
327	Earth connection (sender earth), in engine compartment wiring harness

ws	=	white
sw	=	black
ro	=	red
br	=	brown
gn	=	green
bl	=	blue
gr	=	grey
li	=	purple
ge	=	yellow
or	=	orange
rs	=	pink

Protected by copyright. Copyright by Volkswagen AG.
satelettronica

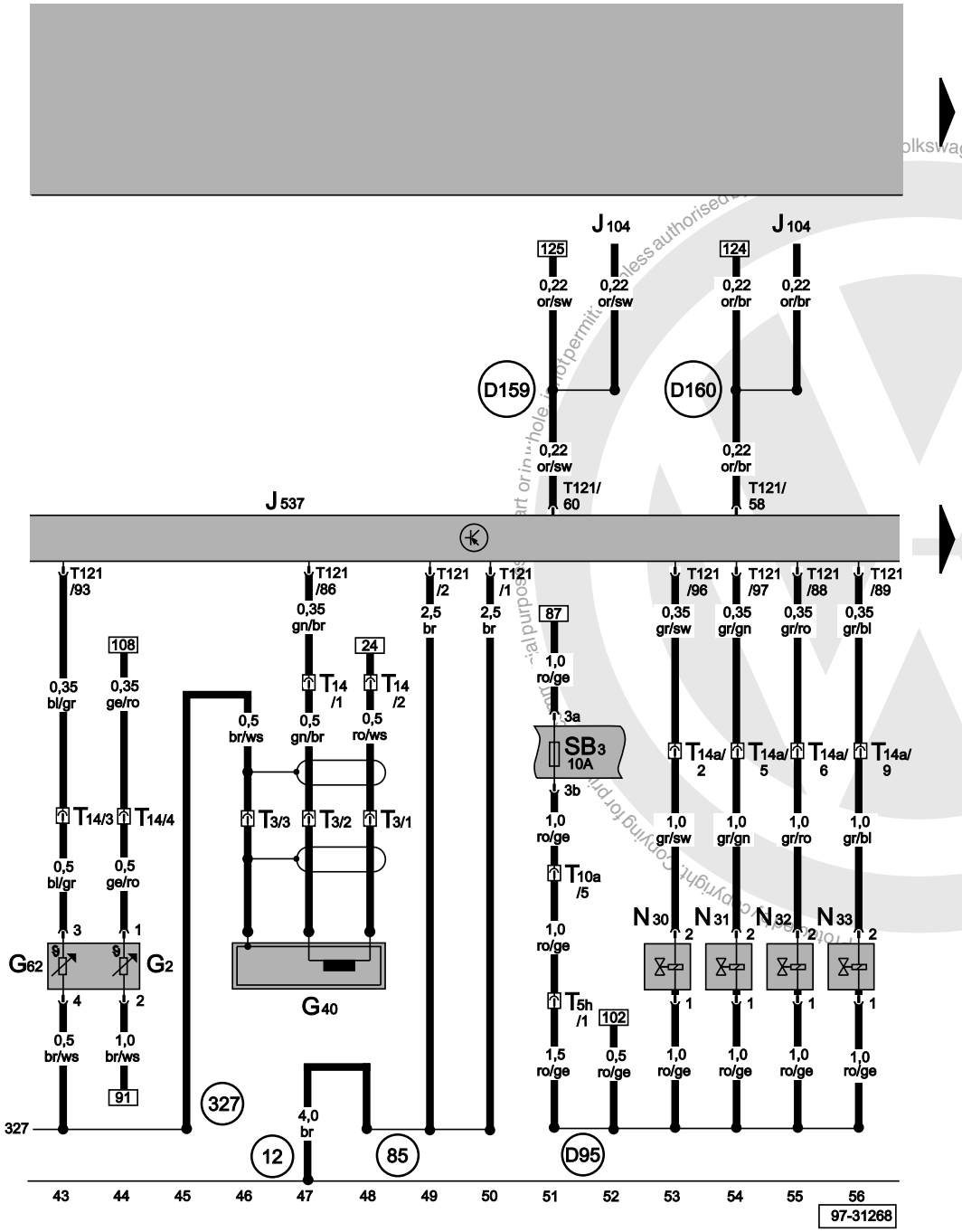

4LV control unit (injection system), hall sender 1, coolant temperature sender, injectors

G2	Coolant temperature sender
G40	Hall sender I
G62	Coolant temperature sender
J104	ABS with EDL control unit
J537	4LV control unit (injection system)
N30	Injector, cylinder 1
N31	Injector, cylinder 2
N32	Injector, cylinder 3
N33	Injector, cylinder 4
SB3	Fuse -3- in fuse box
T3	3-pin connector
T5h	5-pin connector, on cylinder head, left
T10a	10-pin connector, green, connector point under relay carrier
T14	14-pin connector, black, on cylinder head, left
T14a	14-pin connector, brown, on cylinder head, left
T121	121-pin connector
12	Earth point, in engine compartment, left
85	Earth connection -1-, in engine compartment wiring harness
327	Earth connection (sender earth), in engine compartment wiring harness
D95	Connection (injectors), in engine compartment wiring harness
D159	Connection (high bus), in engine compartment wiring harness
D160	Connection (low bus), in engine compartment wiring harness

ws	=	white
sw	=	black
ro	=	red
br	=	brown
gn	=	green
bl	=	blue
gr	=	grey
li	=	purple
ge	=	yellow
or	=	orange
rs	=	pink

Volkswagen AG does not guarantee or accept any liability with respect to the correctness of information in this document. Copyright by Volkswagen AG.
Copyright by Volkswagen AG, unless authorised. Unpermitted use of this document or any part of it is not permitted except for private and non-commercial use within your own company.
satelettronica

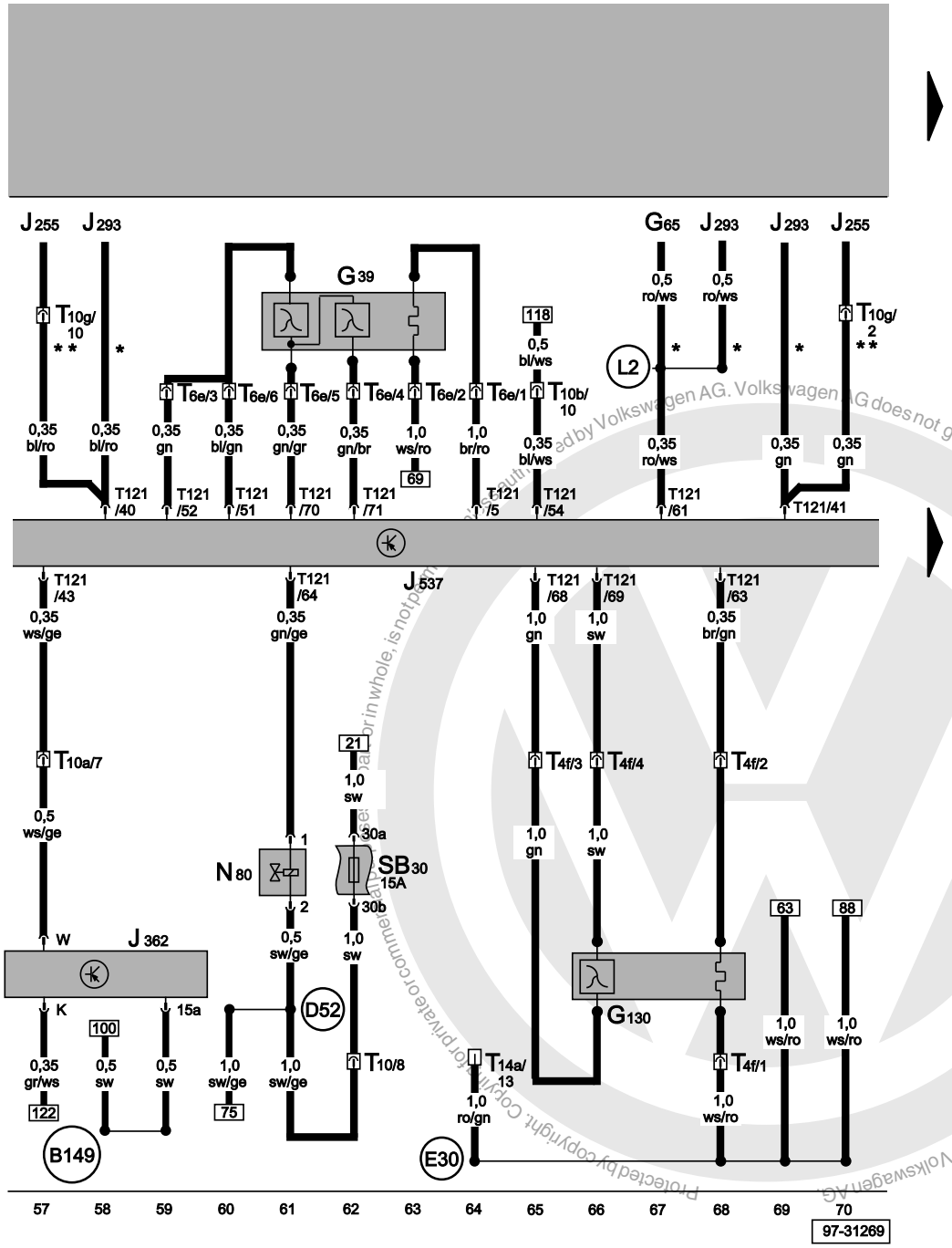

4LV control unit (injection system), lambda probe I, lambda probe II, activated charcoal filter system solenoid valve, immobilizer control unit

G39	Lambda probe before catalyst
G65	High pressure sender
G130	Lambda probe downstream of catalytic converter
J255	Climatronic control unit
J293	Radiator fan control unit
J362	Immobilizer control unit
J537	4LV control unit (injection system)
N80	Activated charcoal filter system solenoid valve 1
SB30	Fuse -30- in fuse box
T4f	4-pin connector
T6e	6-pin connector
T10	10-pin connector, white, connector point under relay carrier
T10a	10-pin connector, green, connector point under relay carrier
T10b	10-pin connector, black, connector point under relay carrier
T10g	10-pin connector, brown, connector point under relay carrier
T14a	14-pin connector, brown, on cylinder head, left
T121	121-pin connector
B149	Positive (+) connection -2- (15a), in interior wiring harness
D52	Positive (+) connection (15a), in engine compartment wiring harness
E30	Connection (87a), in engine wiring harness
L2	Connection, in air conditioner wiring harness
*	Only models with manual control air conditioner
**	Only models with Climatronic

ws	=	white
sw	=	black
ro	=	red
br	=	brown
gn	=	green
bl	=	blue
gr	=	grey
li	=	purple
ge	=	yellow
or	=	orange
rs	=	pink

Protected by copyright. Copyright by Volkswagen AG. Copyright by Volkswagen AG. Volkswagen AG does not guarantee or accept any liability with respect to the correctness of information in this document. Copyright by Volkswagen AG. Reproduction, distribution and storage in whole or in part is not permitted without the express consent of Volkswagen AG. Copyright by Volkswagen AG. Protected by copyright. Copyright by Volkswagen AG.

satelettronica

4LV control unit (injection system), knock sensor, fuel pump relay (crash), exhaust gas recirculation potentiometer

G61	Knock sensor
G212	Exhaust gas recirculation potentiometer
J17	Fuel pump relay
J234	Airbag control unit
J537	4LV control unit (injection system)
N18	Exhaust gas recirculation valve
SB31	Fuse -31- in fuse box
T2	2-pin connector, black
T6d	6-pin connector
T10d	10-pin connector, red, connector point under relay carrier
T10g	10-pin connector, brown, connector point under relay carrier
T10x	10-pin connector, yellow, connector point under relay carrier
T14	14-pin connector, black, on cylinder head, left
T121	121-pin connector
W	Interior light, front
76	Earth point, near selector mechanism
200	Earth connection (screening), in engine compartment wiring harness
A125	Connection (crash signal), in dash panel wiring harness
B102	Earth connection, in front left interior wiring harness
B169	Positive (+) connection -1- (30), in interior wiring harness

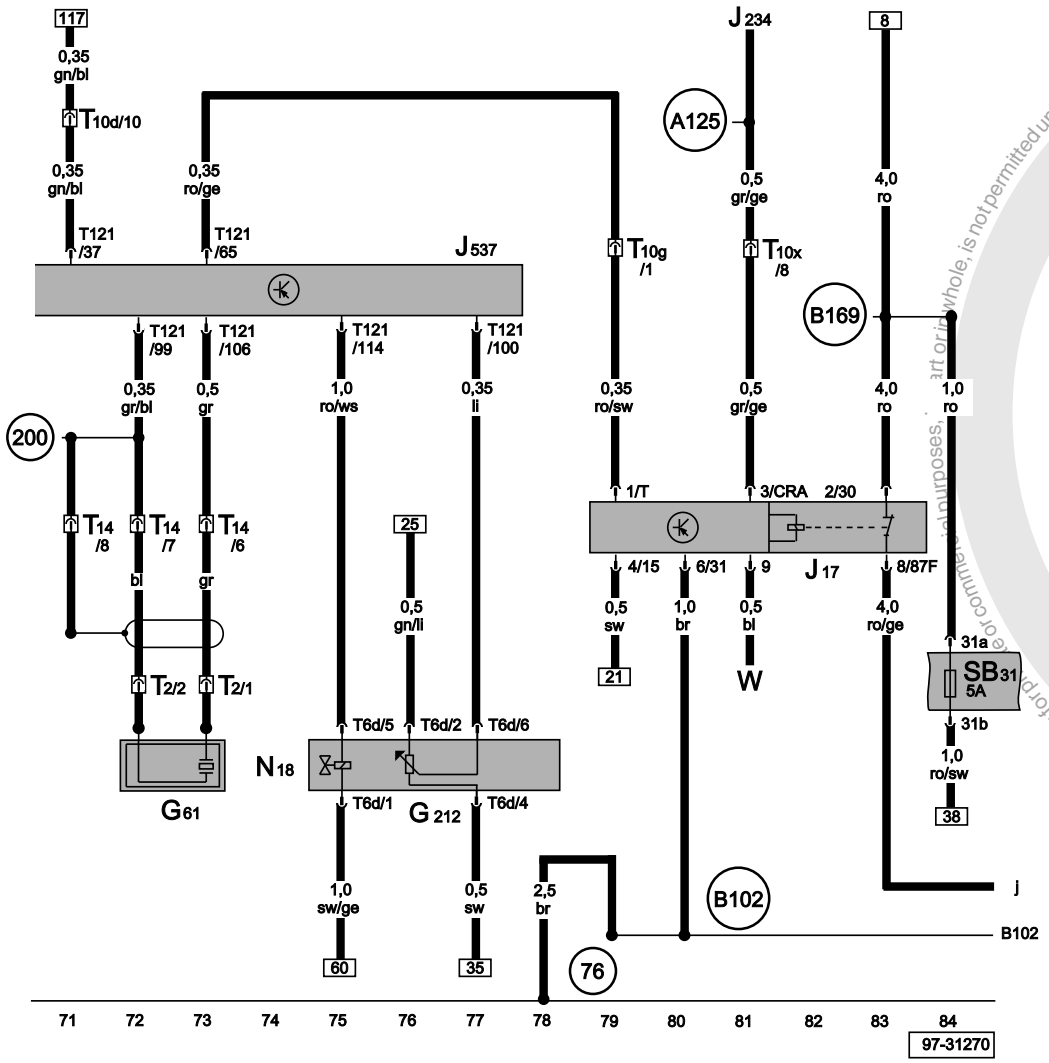

ws	=	white
sw	=	black
ro	=	red
br	=	brown
gn	=	green
bl	=	blue
gr	=	grey
li	=	purple
ge	=	yellow
or	=	orange
rs	=	pink

Protected by copyright. Copying for private or commercial purposes, in part or in whole, is not permitted unless authorised by Volkswagen AG. Volkswagen AG does not guarantee or accept any liability with respect to the correctness of information in this document. Copyright by Volkswagen AG.
satelettronica

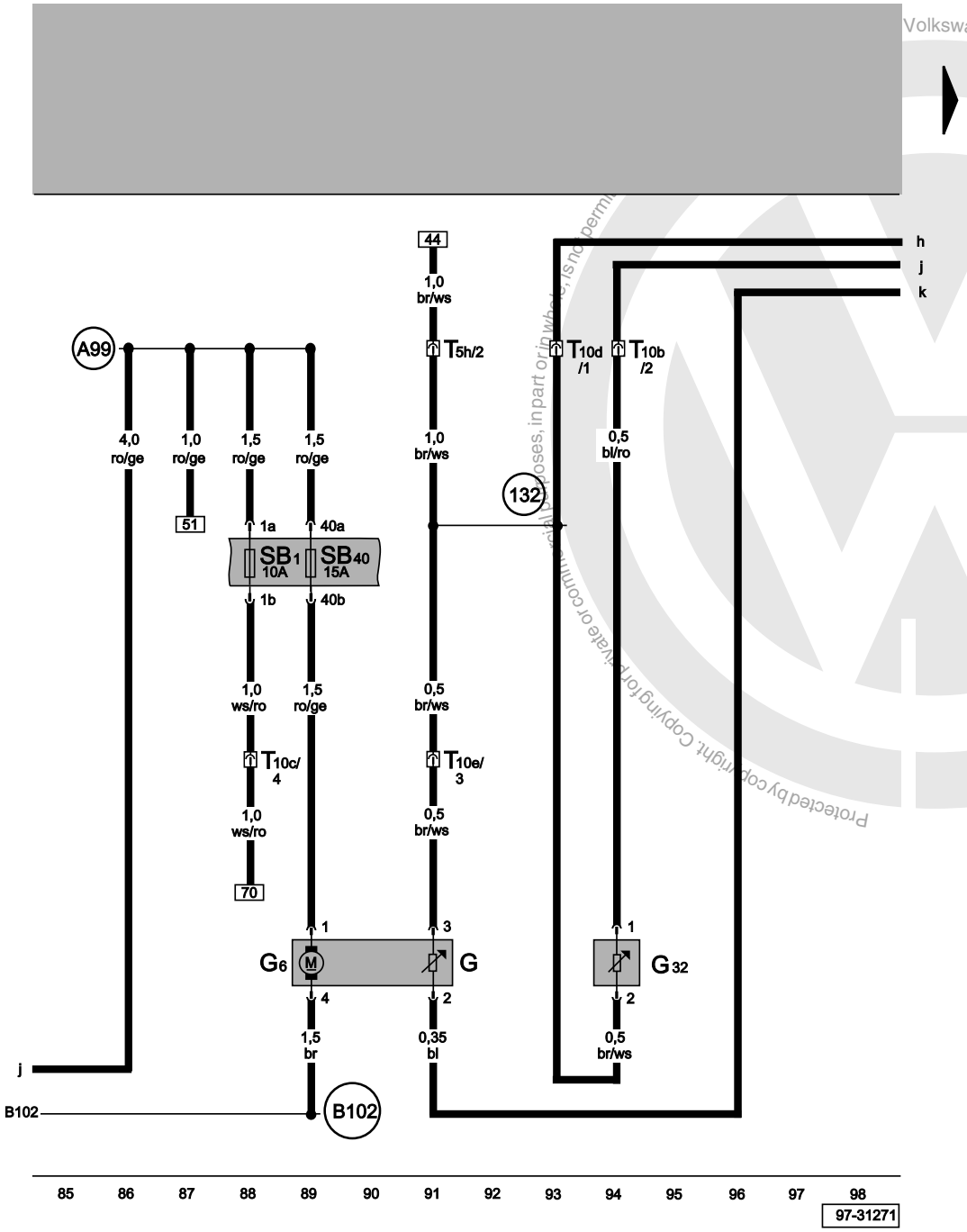

Fuel pump, speedometer sender, fuel gauge sender, coolant shortage indicator sender

G	Fuel gauge sender
G6	Fuel pump
G32	Coolant shortage indicator sender
SB1	Fuel -1- in fuse box
SB40	Fuel -40- in fuse box
T5h	5-pin connector, on cylinder head, left
T10b	10-pin connector, black, connector point under relay carrier
T10c	10-pin connector, blue, connector point under relay carrier
T10d	10-pin connector, red, connector point under relay carrier
T10e	10-pin connector, light pink, connector point under relay carrier
132	Earth connection -3-, in engine compartment wiring harness
A99	Connection -1- (87), in dash panel wiring harness
B102	Earth connection, in interior wiring harness, front left

ws	=	white
sw	=	black
ro	=	red
br	=	brown
gn	=	green
bl	=	blue
gr	=	grey
li = purple
ge = yellow
or = orange
rs = pink

Volkswagen AG does not guarantee or assume any liability with respect to the correctness of information in this document. Copyright by Volkswagen AG. Protected by copyright. Copying for private or commercial purposes, in part or in whole, is not permitted.

satelettronica

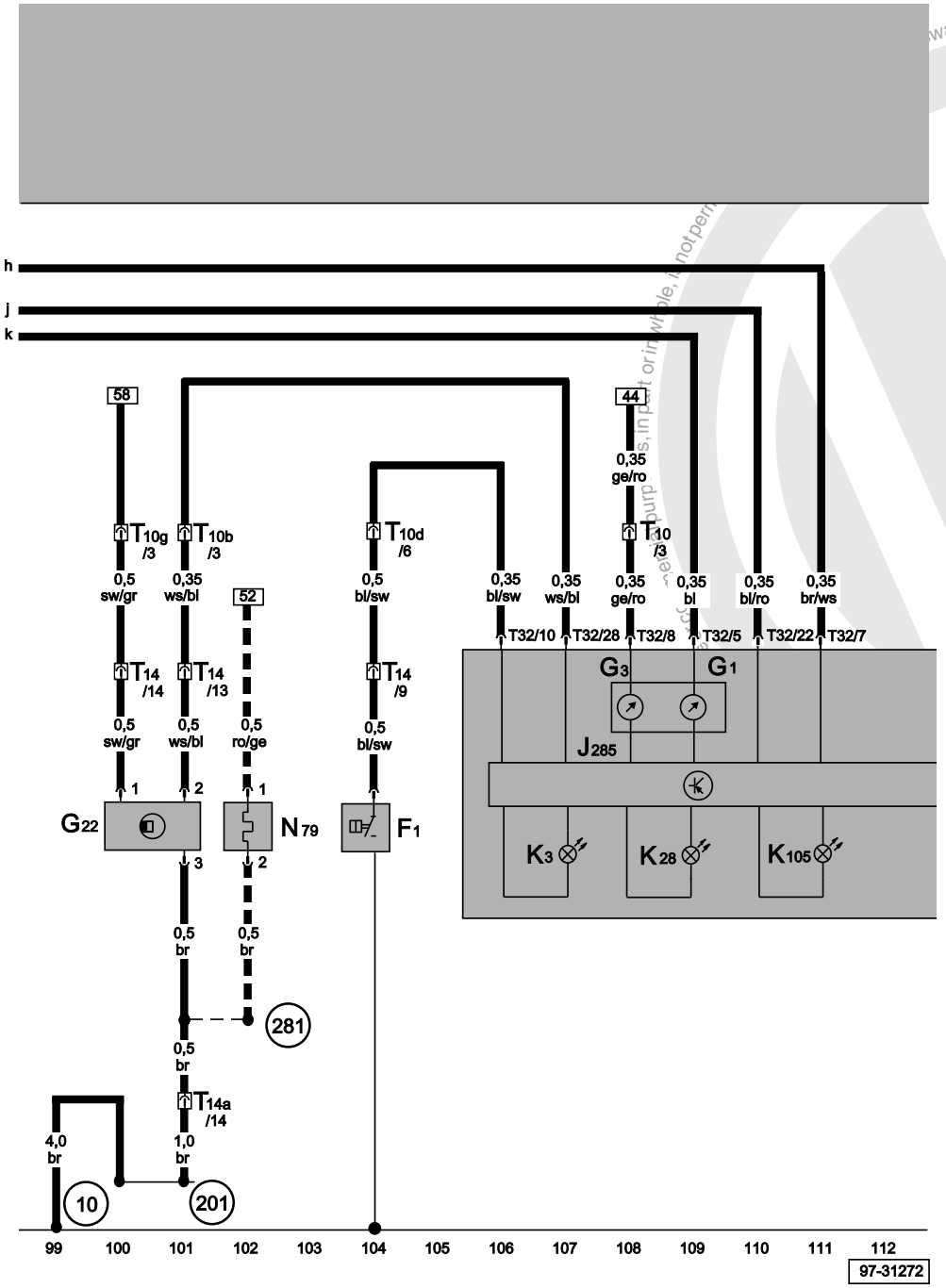

Dash panel insert, oil pressure warning, coolant temperature gauge, fuel gauge, rev. counter, heater element (crankcase breather), warning lamps

F1	Oil pressure switch
G1	Fuel gauge
G3	Coolant temperature gauge
G22	Speedometer sender
J285	Control unit with display in dash panel insert
K3	Oil pressure warning lamp
K28	Coolant temperature/coolant shortage warning lamp
K105	Reserve fuel warning lamp
N79	Heater element (crankcase breather)
T10	10-pin connector, white, connector point under relay carrier
T10b	10-pin connector, black, connector point under relay carrier
T10d	10-pin connector, red, connector point under relay carrier
T10g	10-pin connector, brown, connector point under relay carrier
T14	14-pin connector, black, on cylinder head, left
T14a	14-pin connector, brown, on cylinder head, left
T32	32-pin connector, blue
(10)	Earth point, in plenum chamber
(201)	Earth connection -5-, in engine compartment wiring harness
(281)	Earth connection -1-, in engine prewiring wiring harness
---	Only AUA/APE from December 2000

ws	=	white
sw	=	black
ro	=	red
br	=	brown
gn	=	green
bl	=	blue
gr	=	grey
li	=	purple
ge	=	yellow
or	=	orange
rs	=	pink

satelettronica

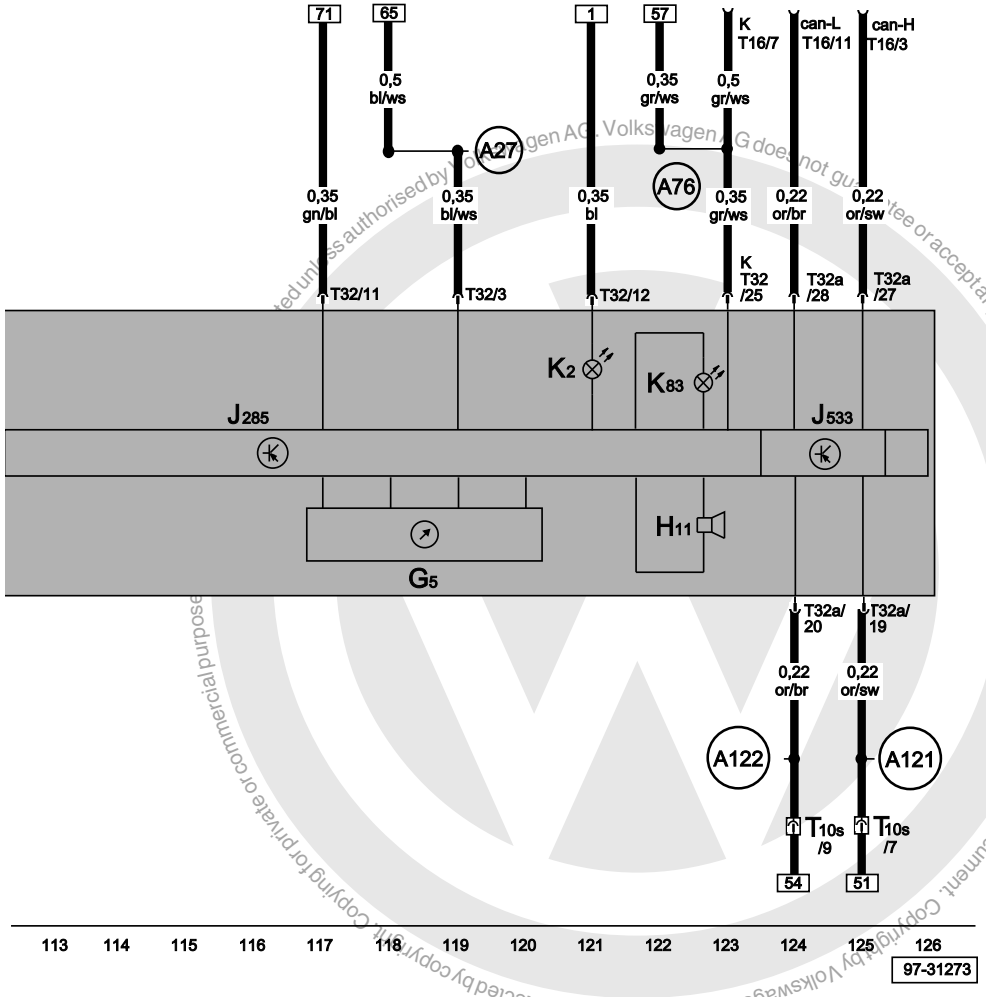

ws = white
sw = black
ro = red
br = brown
gn = green
bl = blue
gr = grey
li = purple
ge = yellow
or = orange
rs = pink

Dash panel insert, warning lamps, self-diagnosis connection, data bus diagnostic interface

G5	Rev. counter
H11	Oil pressure warning buzzer
J285	Control unit with display in dash panel insert
J533	Data bus diagnostic interface control unit
K2	Alternator warning lamp
K83	Exhaust emissions warning lamp
T10s	10-pin connector, green, connector point under relay carrier
T16	16-pin connector, self-diagnosis connection
T32	32-pin connector, green
T32a	32-pin connector, blue
A27	Connection (speed signal), in dash panel wiring harness
A76	Connection (diagnosis wire K), in dash panel wiring harness
A121	Connection (high bus), in dash panel wiring harness
A122	Connection (low bus), in dash panel wiring harness

Protected by copyright. Copying for private or commercial purposes, in part, is not permitted unless authorised by Volkswagen AG. Volkswagen AG does not guarantee or accept any liability with respect to the correctness of information in this document. Copyright by Volkswagen AG.

satelettronica

1.6 l/92 kW Simos, engine codes ARC, AVY

From October 1999

1.6 l/92 kW Simos, engine codes AVY, From October 1999

For alternatives to relay and fuse positions as well as multi-pin connector wiring - see "Fitting locations" section.

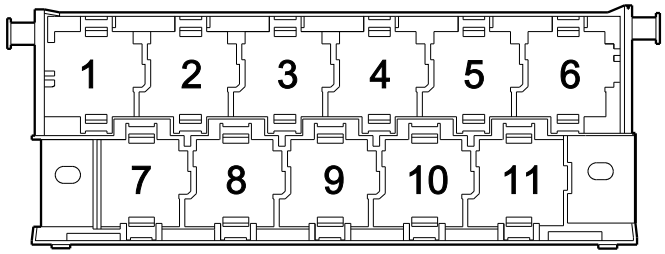

97-22850

Fuse colours

30 A - green
25 A - white
20 A - yellow
15 A - blue
10 A - red
7.5 A - brown
5 A - beige
3 A - purple

Protected by copyright. Copying for private or commercial purposes, in part or in whole, is not permitted unless authorised by Volkswagen AG. Volkswagen AG does not guarantee or accept any liability with respect to the correctness of information in this document. Copyright by Volkswagen AG.

satelettronica

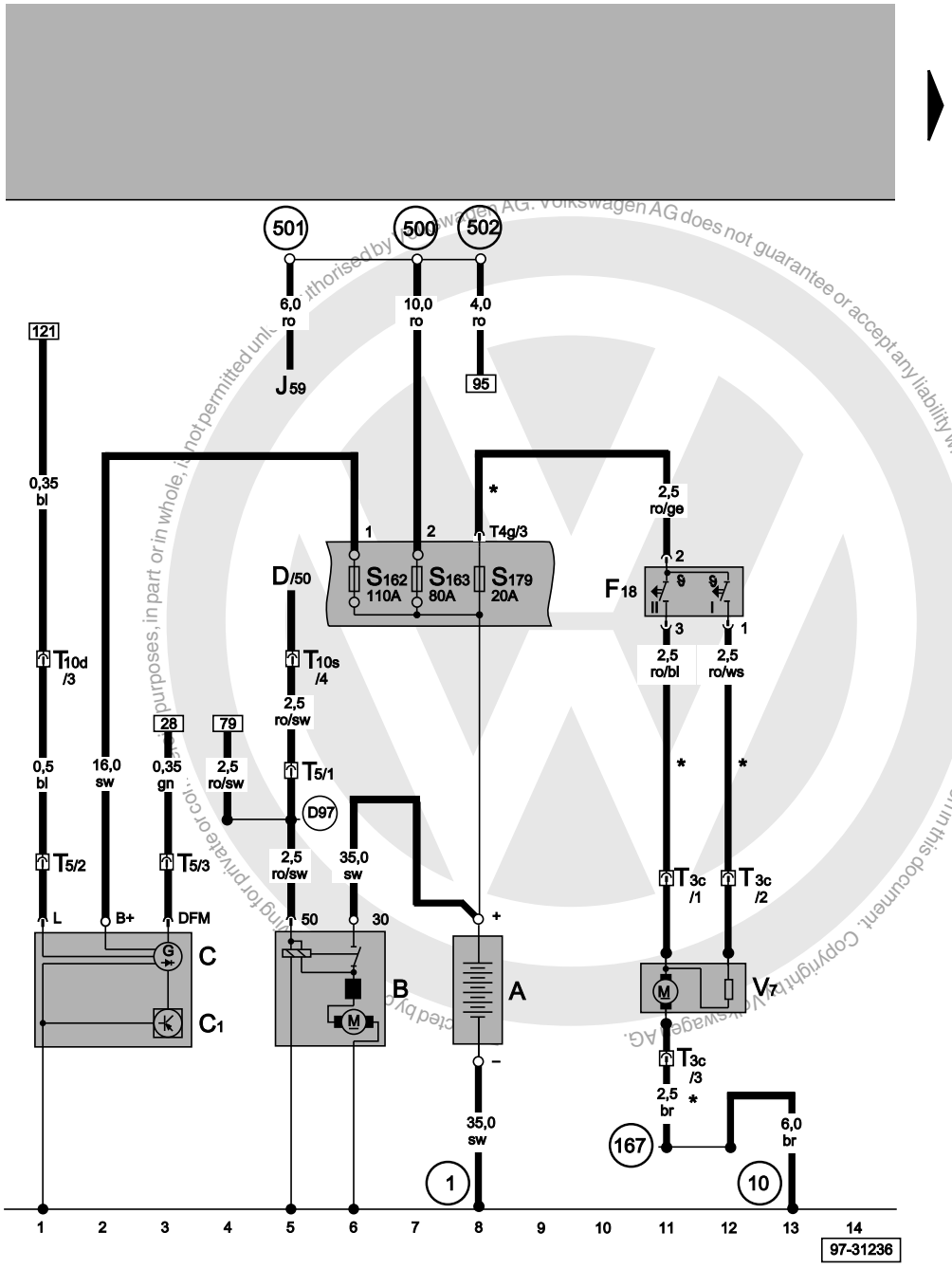

Battery, alternator, voltage regulator, starter, radiator fan thermo-switch, radiator fan

A	Battery
B	Starter
C	Alternator
C1	Voltage regulator
D	Ignition/starter switch
F18	Radiator fan thermo-switch
J59	X contact relief relay
S162	Fuse -1- (30), in fuse box/battery
S163	Fuse -2- (30), in fuse box/battery
S179	Fuse -7- (30), in fuse box/battery
T3c	3-pin connector
T4g	4-pin connector, black
T5	5-pin connector
T10d	10-pin connector, red, connector point under relay carrier
V7	Radiator fan
1	Earth strap, battery - body
10	Earth point, in plenum chamber
167	Earth connection -4-, in engine compartment wiring harness
500	Screw connection -1- (30), on relay plate
501	Screw connection -2- (30), on relay plate
502	Screw connection -3- (30), on relay plate
D97	Connection (50), in engine compartment wiring harness
*	Not with models with air conditioner

ws	=	white
sw	=	black
ro	=	red
br	=	brown
gn	=	green
bl	=	blue
gr	=	grey
li	=	purple
ge	=	yellow
or	=	orange
rs	=	pink

satelettronica

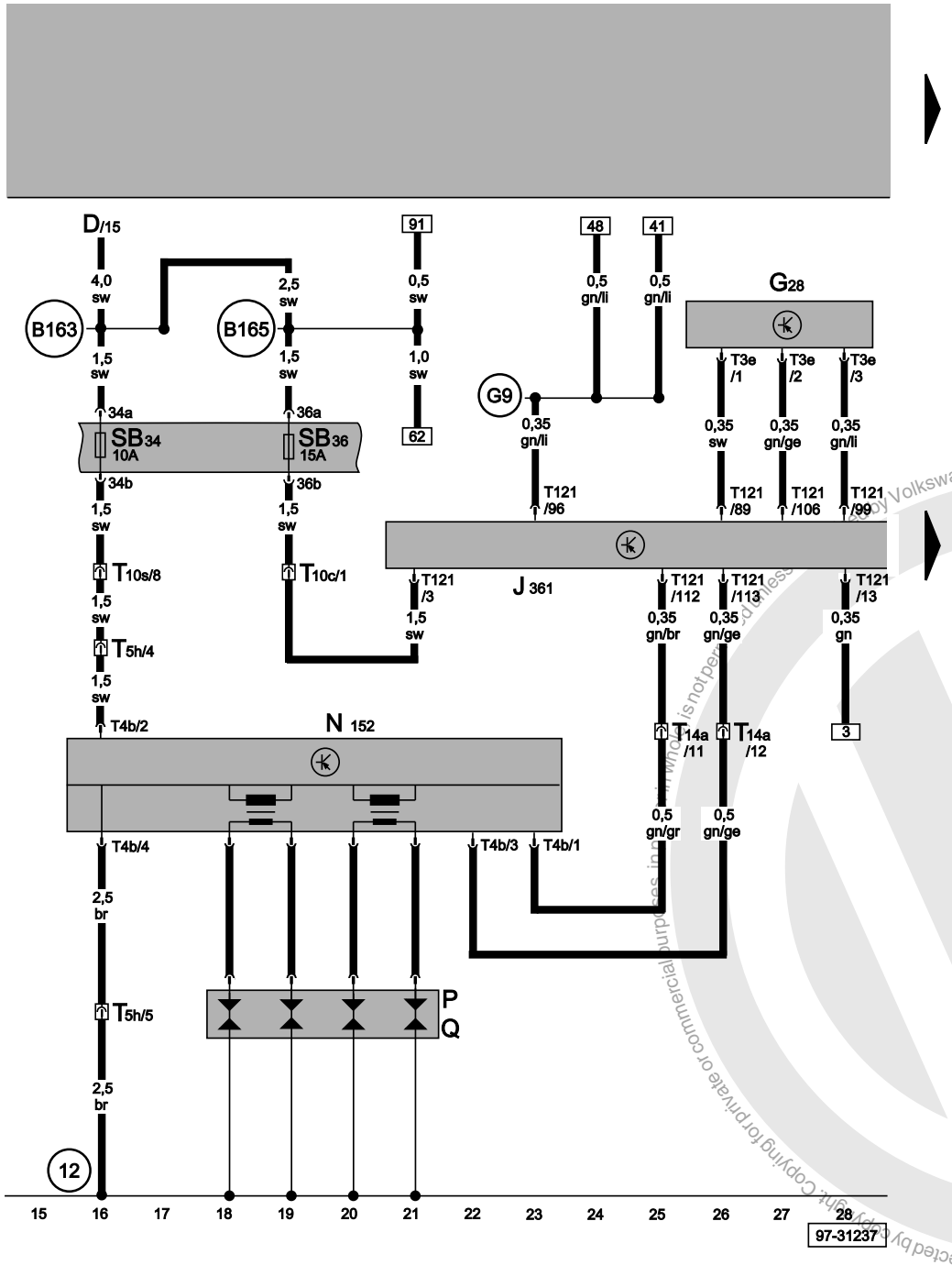

Simos control unit, engine speed sender, ignition transformer, spark plugs, spark plug connector, fuses

D	Ignition/starter switch
G28	Engine speed sender
J361	Simos control unit (injection system)
N152	Ignition transformer
P	Spark plug connector
Q	Spark plugs
SB34	Fuse -34- in fuse box
SB36	Fuse -36- in fuse box
T3e	3-pin connector
T4b	4-pin connector, black
T5h	5-pin connector, on cylinder head, left
T10c	10-pin connector, blue, connector point under relay carrier
T10s	10-pin connector, light green, connector point under relay carrier
T14a	14-pin connector, brown, on cylinder head, left
T121	121-pin connector
12	Earth point, in engine compartment, left
B163	Connection -1- (15), in interior wiring harness
B165	Connection -2- (15), in interior wiring harness
G9	Connection, in Simos wiring harness

ws	=	white
sw	=	black
ro	=	red
br	=	brown
gn	=	green
bl	=	blue
gr	=	grey
li	=	purple
ge	=	yellow
or	=	orange
rs	=	pink

Protected by copyright. Copyright by Volkswagen AG. Volkswagen AG does not guarantee or accept any liability with respect to the correctness of information in this document. Copyright by Volkswagen AG. Protected by copyright. Copying for private or commercial purposes, in part or in whole, is not permitted unless authorised by Volkswagen AG.
satelettronica

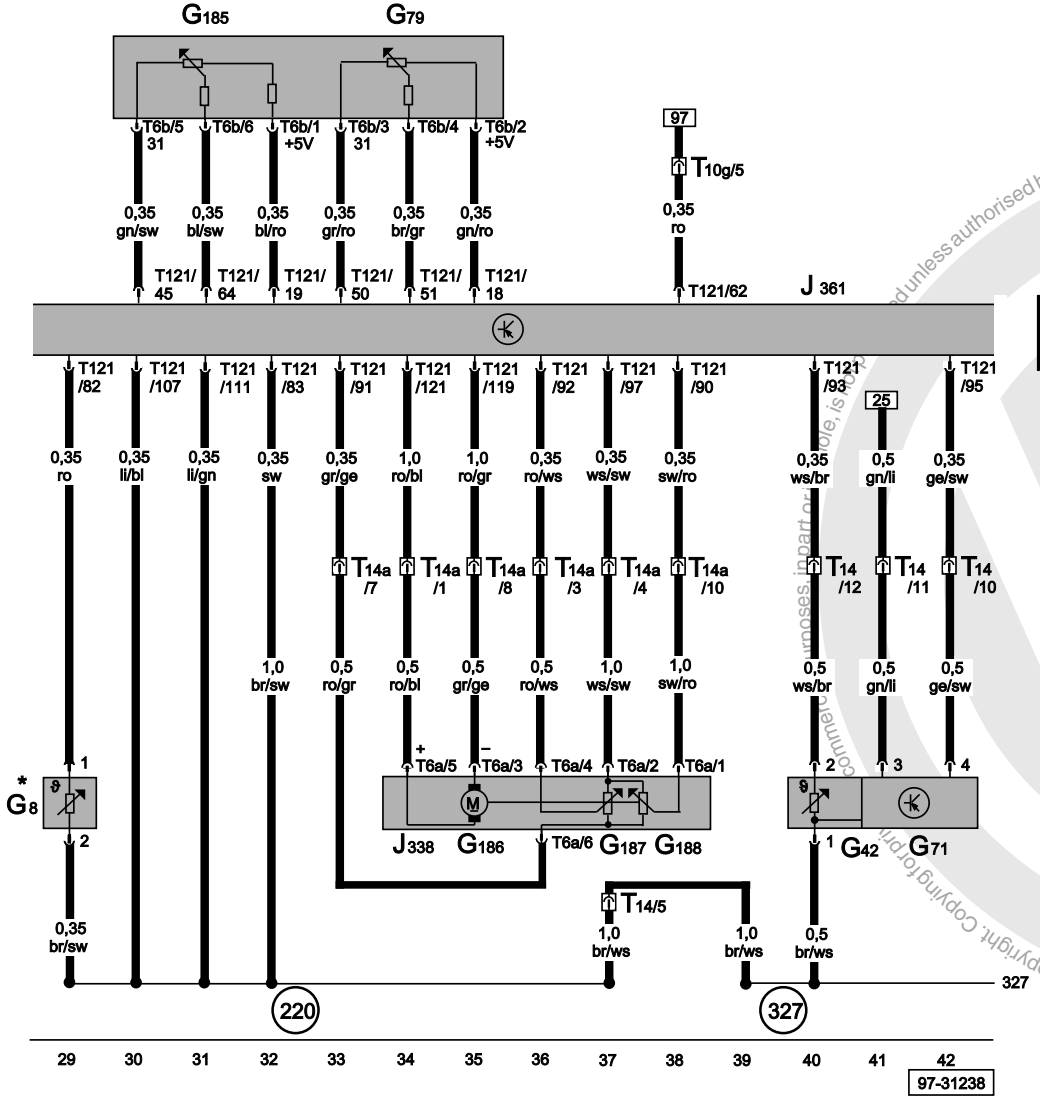

Simos control unit, throttle valve control unit, accelerator pedal position sender, intake manifold pressure sender, intake air temperature sender, oil temperature sender

G8	Oil temperature sender
G42	Intake air temperature sender
G71	Intake manifold pressure sender
G79	Accelerator pedal position sender
G185	Accelerator pedal position sender -2-
G186	Throttle valve drive (electric throttle operation)
G187	Throttle valve drive angle sender -1-
G188	Throttle valve drive angle sender -2-
J338	Throttle valve control unit
J361	Simos control unit (injection system)
T6a	6-pin connector, black
T6b	6-pin connector
T10g	10-pin connector, brown, connector point under relay carrier
T14	14-pin connector, black, on cylinder head, left
T14a	14-pin connector, brown, on cylinder head, left
T121	121-pin connector
220	Earth connection (sender earth), in engine wiring harness
327	Earth connection (sender earth), in engine compartment wiring harness
*	Not fitted from May 2001

ws	=	white
sw	=	black
ro	=	red
br	=	brown
gn	=	green
bl	=	blue
gr	=	grey
li	=	purple
ge	=	yellow
or	=	orange
rs	=	pink

satelettronica

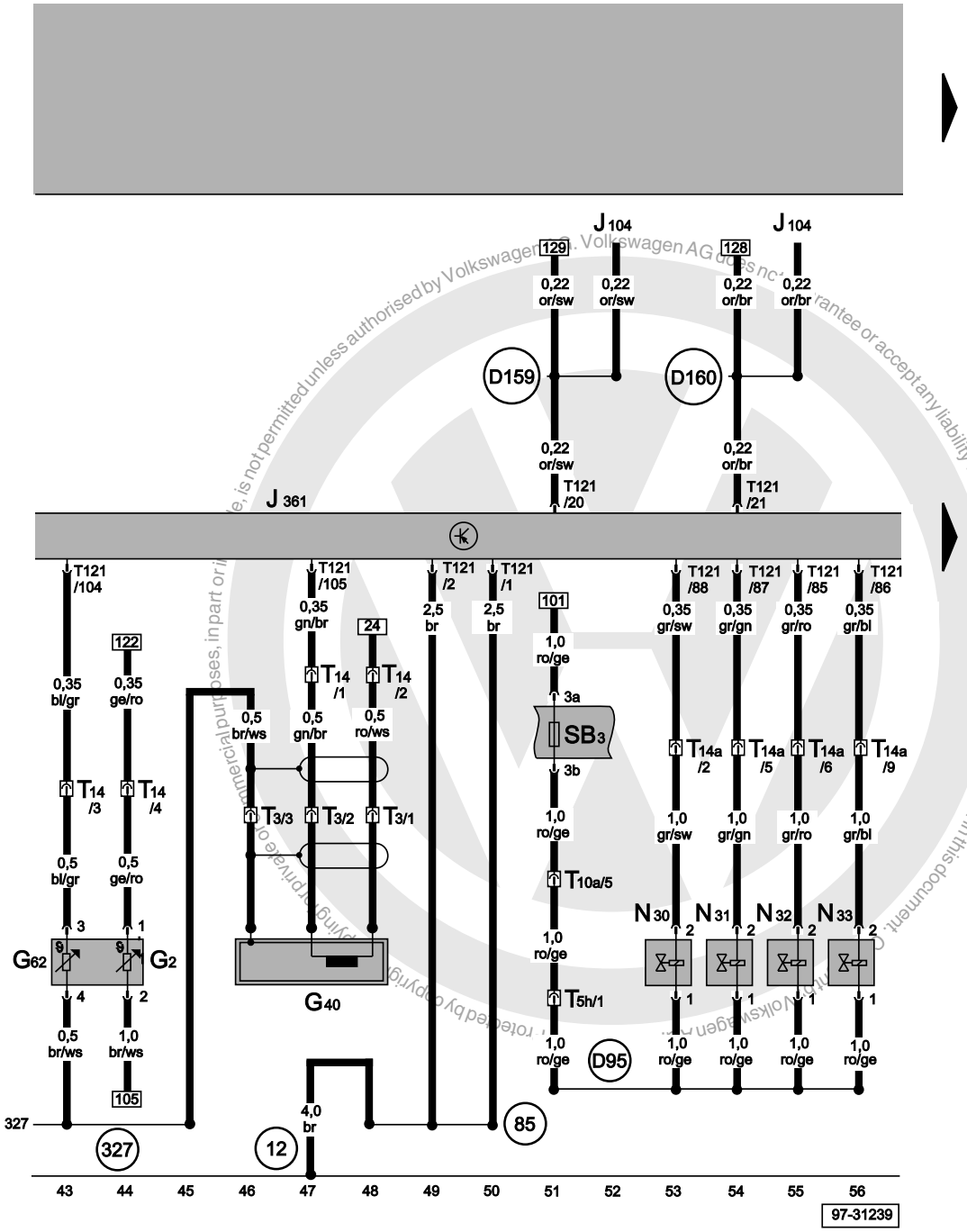

Simos control unit, hall sender 1, coolant temperature sender, injectors

G2	Coolant temperature sender
G40	Hall sender I
G62	Coolant temperature sender
J104	ABS with EDL control unit
J361	Simos control unit (injection system)
N30	Injector, cylinder 1
N31	Injector, cylinder 2
N32	Injector, cylinder 3
N33	Injector, cylinder 4
SB3	Fuse -3- in fuse box
T3	3-pin connector
T5h	5-pin connector, on cylinder head, left
T10a	10-pin connector, green, connector point under relay carrier
T14	14-pin connector, on cylinder head, left
T14a	14-pin connector, brown, on cylinder head, left
T121	121-pin connector
12	Earth point, in engine compartment, left
85	Earth connection -1-, in engine compartment wiring harness
327	Earth connection (sender earth), in engine compartment wiring harness
D95	Connection (injectors), in engine compartment wiring harness
D159	Connection (high bus), in engine compartment wiring harness
D160	Connection (low bus), in engine compartment wiring harness

ws	=	white
sw	=	black
ro	=	red
br	=	brown
gn	=	green
bl	=	blue
gr	=	grey
li = purple
ge = yellow
or = orange
rs = pink

satelettronica

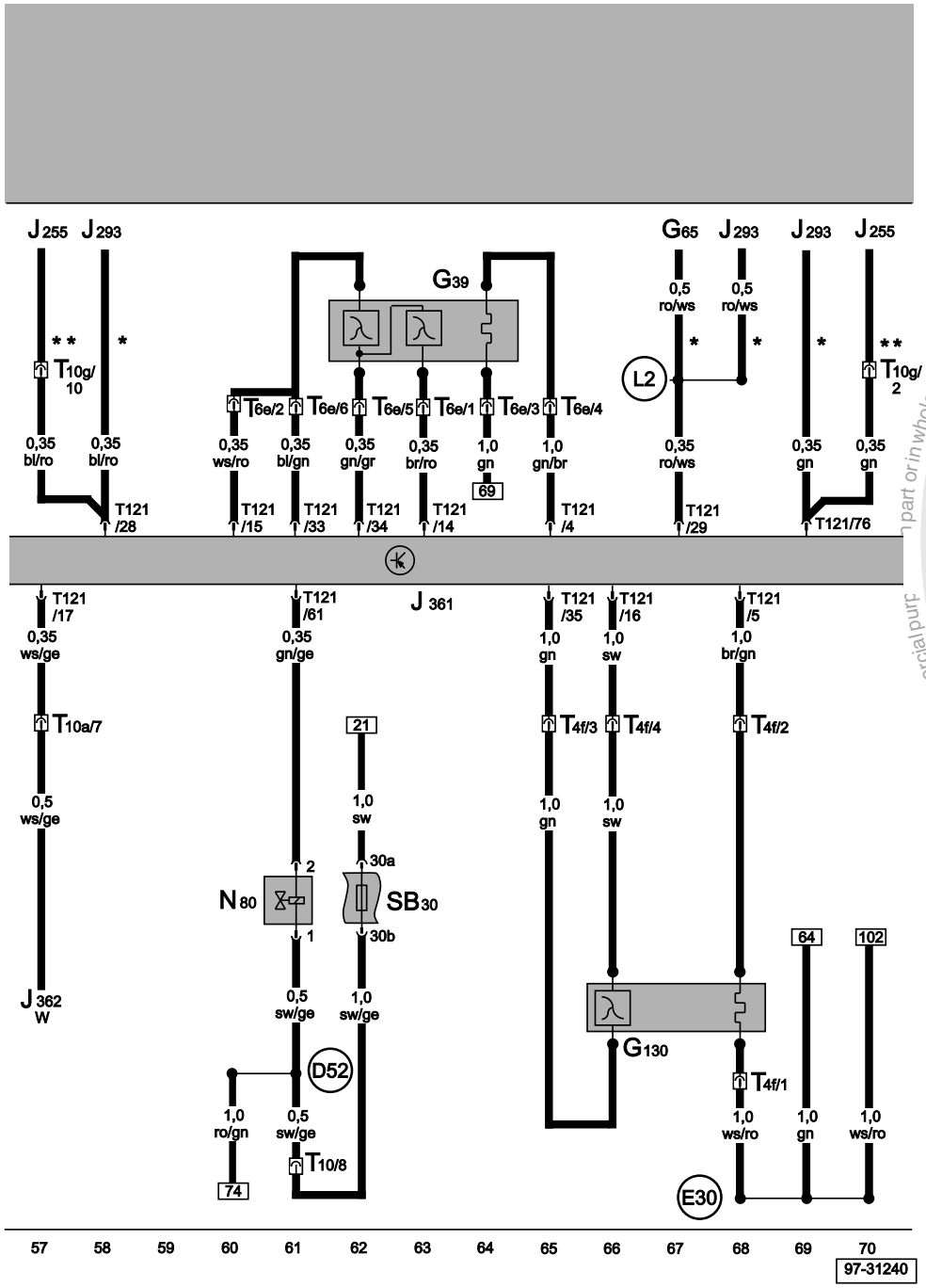

Simos control unit, lambda probe I, lambda probe II, activated charcoal filter system solenoid valve, immobilizer control unit

G39	Lambda probe before catalyst
G65	High pressure sender
G130	Lambda probe after catalyst
J293	Radiator fan control unit
J255	Climatronic control unit
J361	Simos control unit (injection system)
J362	Immobilizer control unit
N80	Activated charcoal filter system solenoid valve 1
SB30	Fuse -30- in fuse box
T4f	4-pin connector
T6e	6-pin connector
T10	10-pin connector, white, connector point under relay carrier
T10a	10-pin connector, green, connector point under relay carrier
T10g	10-pin connector, brown, connector point under relay carrier
T121	121-pin connector
D52	Positive (+) connection (15a), in engine compartment wiring harness
E30	Connection (87a), in engine wiring harness
L2	Connection, in air conditioner wiring harness
*	Only models with manual control air conditioner
**	Only models with Climatronic

ws	=	white
sw	=	black
ro	=	red
br	=	brown
gn	=	green
bl	=	blue
gr	=	grey
li	=	purple
ge	=	yellow
or	=	orange
rs	=	pink

Protected by copyright. Copying for private or commercial purposes, in part or in whole, is not permitted unless authorised by Volkswagen AG. Volkswagen AG does not guarantee or accept any liability with respect to the correctness of information in this document. Copyright by Volkswagen AG.
satelettronica

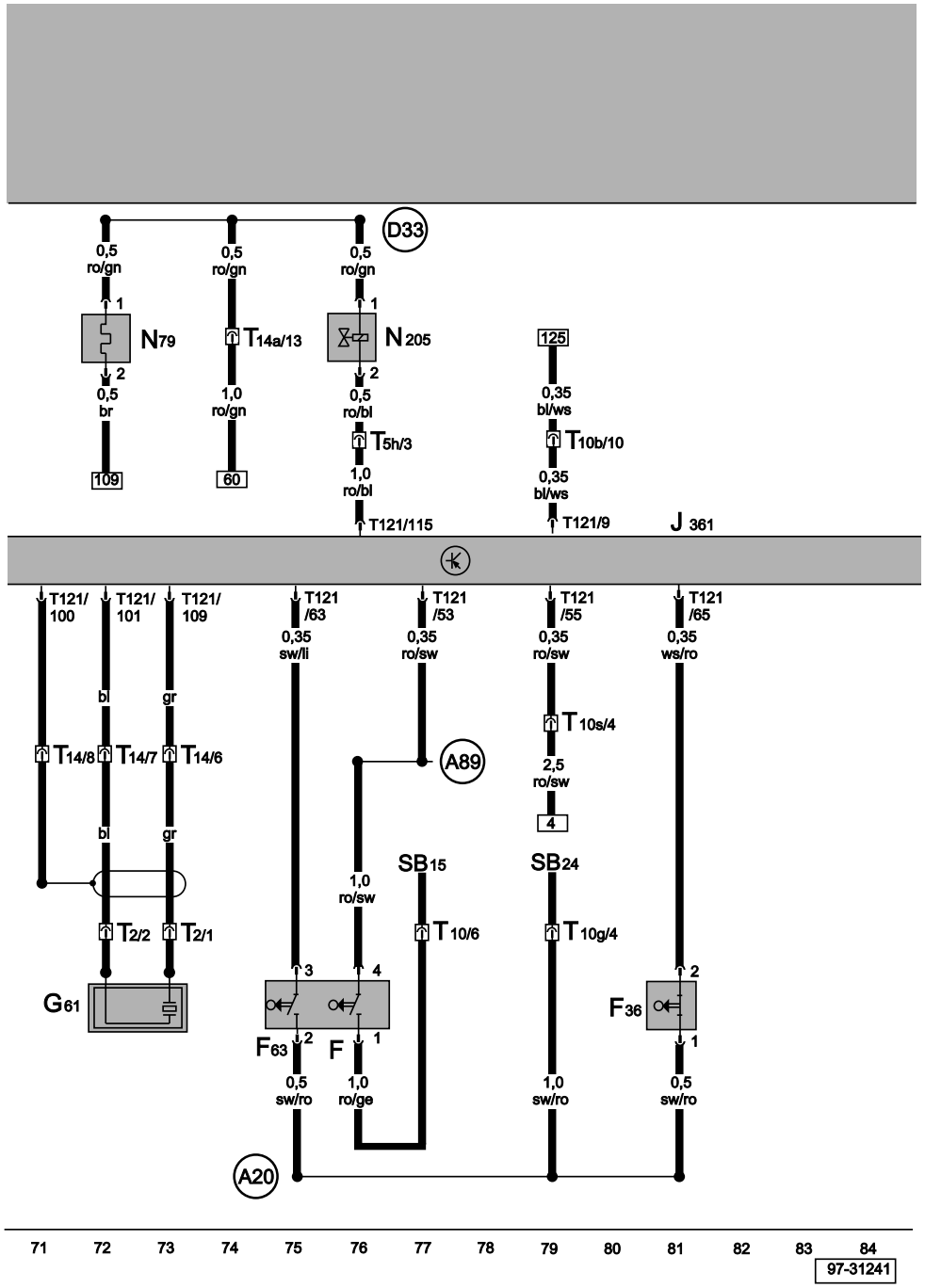

Simos control unit (injection system), knock sensor, clutch pedal switch, brake light switch, brake pedal switch, inlet camshaft timing adjustment valve, heater element (crankcase breather)

F	Brake light switch
F36	Clutch pedal switch
F63	Brake pedal switch
G61	Knock sensor
J361	Simos control unit (injection system)
N79	Heater element (crankcase breather)
N205	Inlet camshaft timing adjustment valve
SB15	Fuse -15- in fuse box
SB24	Fuse -24- in fuse box
T2	2-pin connector, black
T5h	5-pin connector, on cylinder head, left
T10	10-pin connector, white, connector point under relay carrier
T10b	10-pin connector, black, connector point under relay carrier
T10g	10-pin connector, brown, connector point under relay carrier
T10s	10-pin connector, light green, connector point under relay carrier
T14	14-pin connector, black, on cylinder head, left
T14a	14-pin connector, brown, on cylinder head, left
T121	121-pin connector
A20	Connection (15a), in dash panel wiring harness
A89	Connection -2- (54), in dash panel wiring harness
D33	Positive (+) connection -2- (15), in engine prewiring wiring harness

ws = white
sw = black
ro = red
br = brown
gn = green
bl = blue
gr = grey
li = purple
ge = yellow
or = orange
rs = pink

Protected by copyright. Copying for private or commercial purposes, in part or in whole, is not permitted unless authorised by Volkswagen AG. Volkswagen AG does not guarantee or accept any liability with respect to the correctness of information in this document. Copyright by Volkswagen AG.
satelettronica

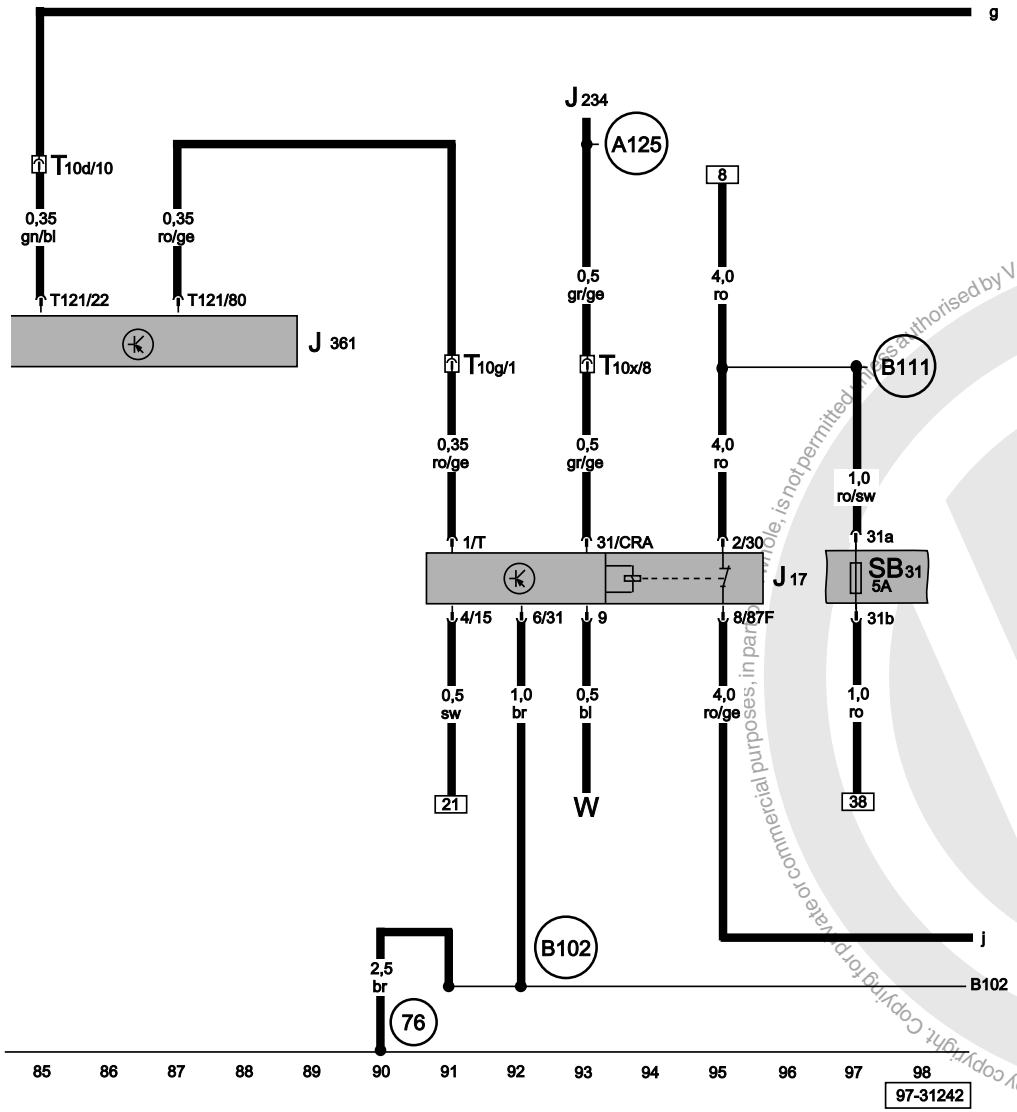

Simos control unit (injection system), fuel pump relay, fuel pump relay (crash), oil temperature sender

J17	Fuel pump relay
J234	Airbag control unit, behind lower console
J361	Simos control unit (injection system)
SB31	Fuse -31- in fuse box
T10d	10-pin connector, red, connector point under relay carrier
T10g	10-pin connector, brown, connector point under relay carrier
T10x	10-pin connector, yellow, connector point under relay carrier
T14	14-pin connector, black, on cylinder head, left
T121	121-pin connector
W	Interior light, front
76	Earth point, near selector mechanism
A125	Connection (crash signal), in dash panel wiring harness
B102	Earth connection, in front left interior wiring harness
B111	Positive (+) connection -1- (30a), in interior wiring harness

ws	=	white
sw	=	black
ro	=	red
br	=	brown
gn	=	green
bl	=	blue
gr	=	grey
li	=	purple
ge	=	yellow
or	=	orange
rs	=	pink

Protected by copyright. Copyright by Volkswagen AG. Volkswagen AG does not guarantee or accept any liability with respect to the correctness of information in this document. Copyright by Volkswagen AG. Copying for private or commercial purposes, in part or in whole, is not permitted unless authorised by Volkswagen AG.
satelettronica

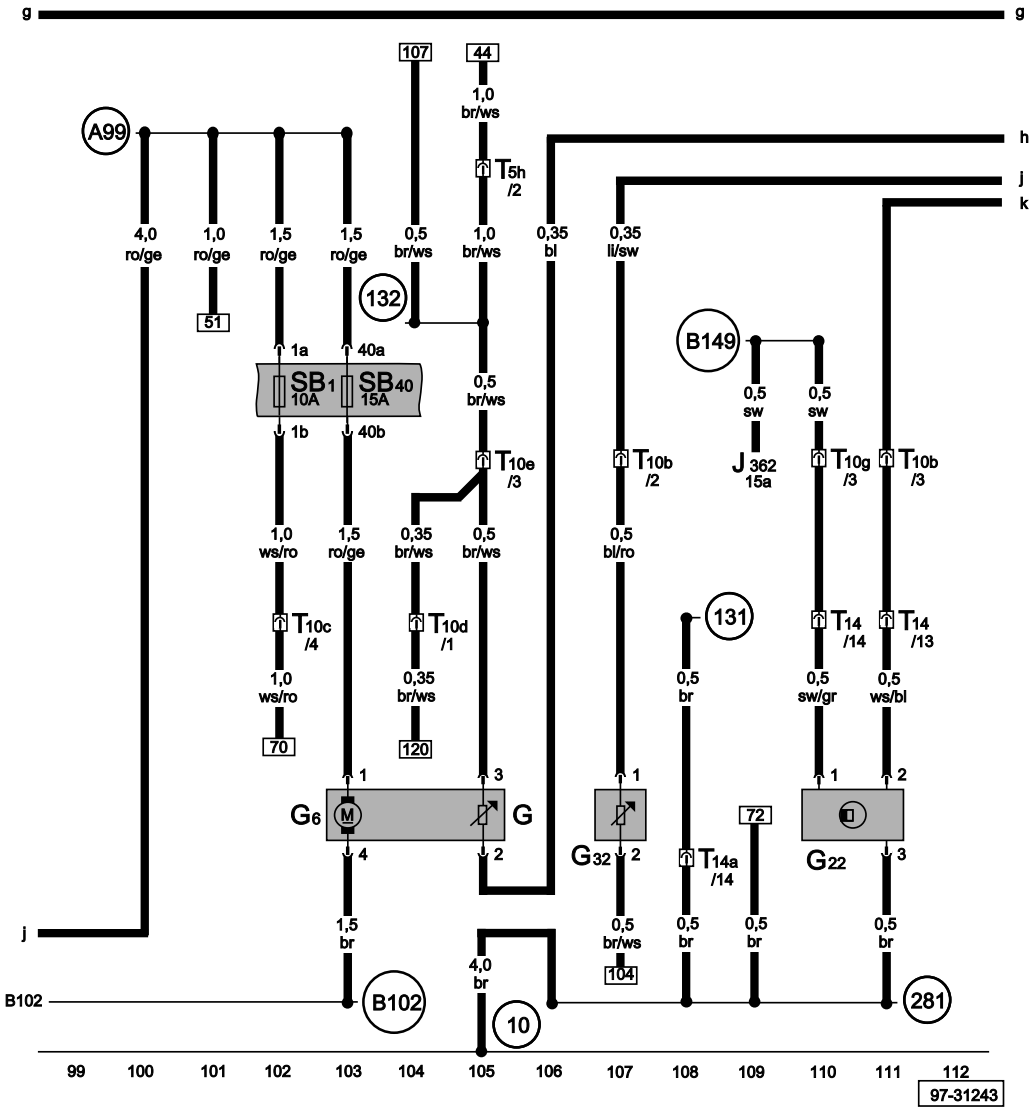

Fuel pump, speedometer sender, fuel gauge sender, coolant shortage indicator sender

G	Fuel gauge sender
G6	Fuel pump
G22	Speedometer sender (hall sender, on gearbox)
G32	Coolant shortage indicator sender
J362	Immobilizer control unit
SB1	Fuse -1- in fuse box
SB40	Fuse -40- in fuse box
T5h	5-pin connector, on cylinder head, left
T10a	10-pin connector, green, connector point under relay carrier
T10b	10-pin connector, black, connector point under relay carrier
T10c	10-pin connector, blue, connector point under relay carrier
T10e	10-pin connector, light pink, connector point under relay carrier
T10g	10-pin connector, brown
T14	14-pin connector, black
T14a	14-pin connector, brown
10	Earth point, in plenum chamber
131	Earth connection -2-, in engine compartment wiring harness
132	Earth connection -3-, in engine compartment wiring harness
281	Earth connection -1-, in engine prewiring wiring harness
A99	Connection -1- (87), in dash panel wiring harness
B102	Earth connection, in interior wiring harness, front left
B149	Positive (+) connection -2- (15a), in interior wiring harness

ws	=	white
sw	=	black
ro	=	red
br	=	brown
gn	=	green
bl	=	blue
gr	=	grey
li	=	purple
ge	=	yellow
or	=	orange
rs	=	pink

Volkswagen AG. Volkswagen AG does not guarantee or accept any liability with respect to the correctness of information in this document. Copyright by Volkswagen AG. Reproduction, in part or in whole, is not permitted unless authorised by Volkswagen AG. Copyright for private or commercial purposes, in part or in whole, is not permitted unless authorised by Volkswagen AG.

satelettronica

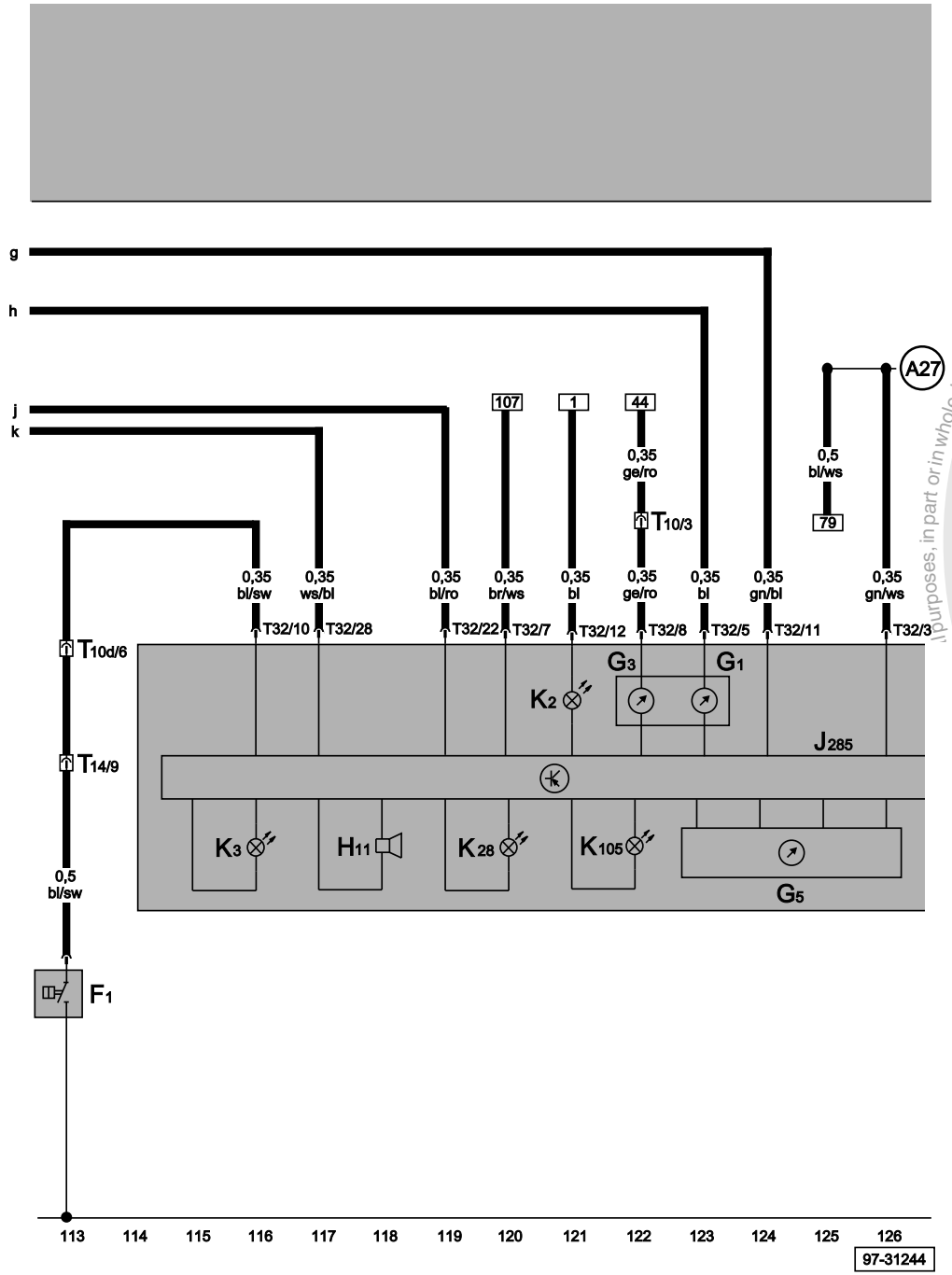

Dash panel insert, oil pressure warning, coolant temperature gauge, fuel gauge, rev. counter, warning lamps

F1	Oil pressure switch
G1	Fuel gauge
G3	Coolant temperature gauge
G5	Rev. counter
H11	Oil pressure warning buzzer
J285	Control unit with display in dash panel insert
K2	Alternator warning lamp
K3	Oil pressure warning lamp
K28	Coolant temperature/coolant shortage warning lamp
K105	Reserve fuel warning lamp
T10	10-pin connector, white, connector point under relay carrier
T10d	10-pin connector, red, connector point under relay carrier
T14	14-pin connector, black, on cylinder head, left
T32	32-pin connector, blue
(A27)	Connection (speed signal), in dash panel wiring harness

ws	=	white
sw	=	black
ro	=	red
br	=	brown
gn	=	green
bl	=	blue
gr	=	grey
li	=	purple
ge	=	yellow
or	=	orange
rs	=	pink

Protected by copyright. Copying for private or commercial purposes, in part or in whole, is not permitted unless authorised by Volkswagen AG. Volkswagen AG does not guarantee or accept any liability with respect to the correctness of information in this document. Copyright by Volkswagen AG.
satelettronica

Dash panel insert, self-diagnosis connection, data bus diagnostic interface

J362	Immobilizer control unit
J285	Control unit with display in dash panel insert
J533	Data bus diagnostic interface control unit
T10s	10-pin connector, light green, connector point under relay carrier
T16	16-pin connector, self-diagnosis connection
T32	32-pin connector, green
T32a	32-pin connector, blue
A76	Connection (diagnosis wire K), in dash panel wiring harness
A121	Connection (high bus), in dash panel wiring harness
A122	Connection (low bus), in dash panel wiring harness

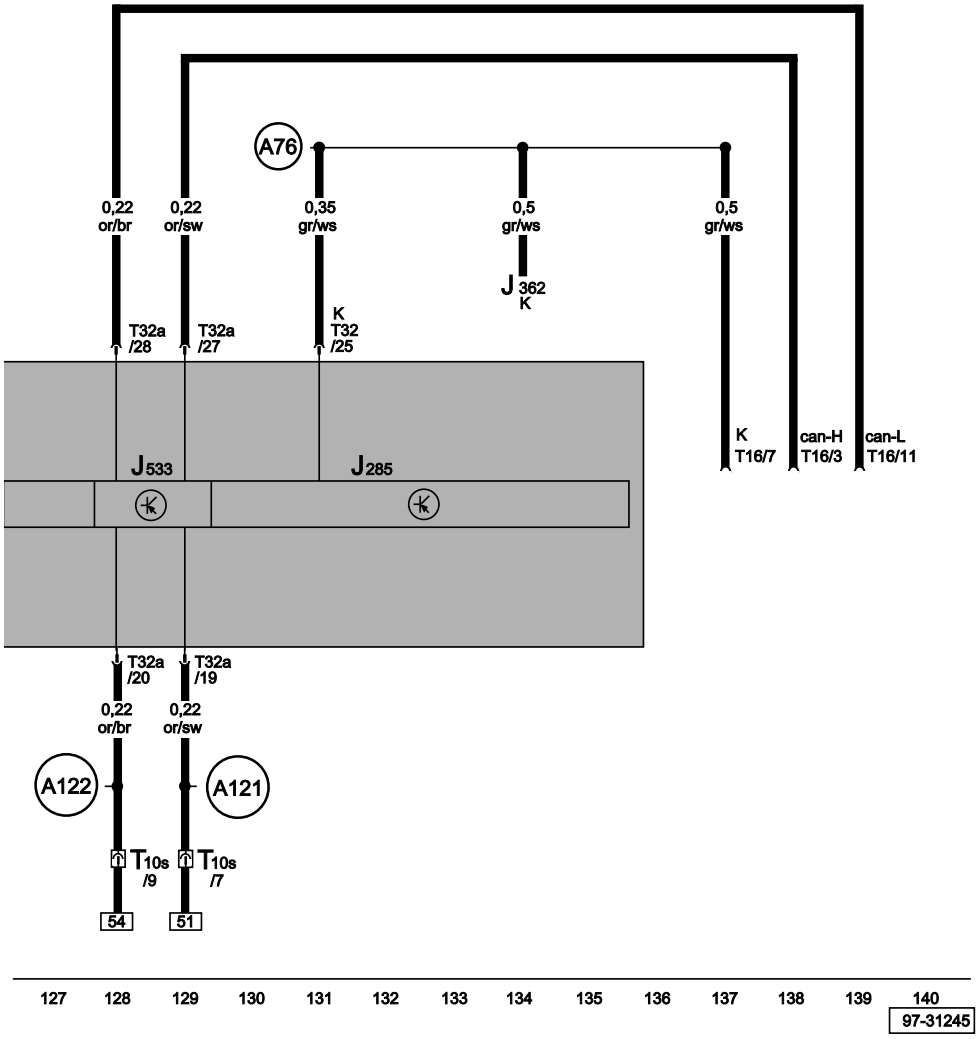

ws	=	white
sw	=	black
ro	=	red
br	=	brown
gn	=	green
bl	=	blue
gr	=	grey
li	=	purple
ge	=	yellow
or	=	orange
rs	=	pink

Protected by copyright. Copying for private or commercial purposes, in part or in whole, is not permitted unless authorised by Volkswagen AG. Volkswagen AG does not guarantee or accept any liability with respect to the correctness of information in this document. Copyright by Volkswagen AG.
satelettronica

1.9 ltr./ 47kW catalytic converter diesel engine, engine codes AEF

From October 1999

For alternatives to relay and fuse positions as well as multi-pin connector wiring - see "Fitting locations" section.

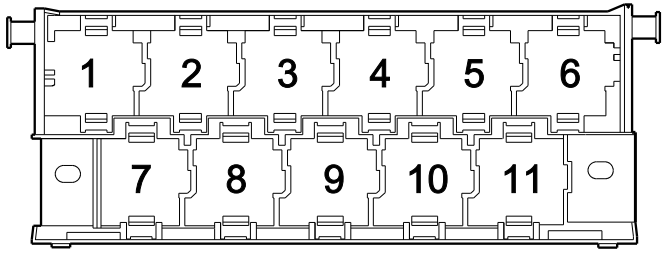

97-22850

Fuse colours

30 A - green
25 A - white
20 A - yellow
15 A - blue
10 A - red
7.5 A - brown
5 A - beige
3 A - lilac

Protected by copyright. Copying for private or commercial purposes, in part or in whole, is not permitted unless authorised by Volkswagen AG. Volkswagen AG does not guarantee or accept any liability with respect to the correctness of information in this document. Copyright by Volkswagen AG.

satelettronica

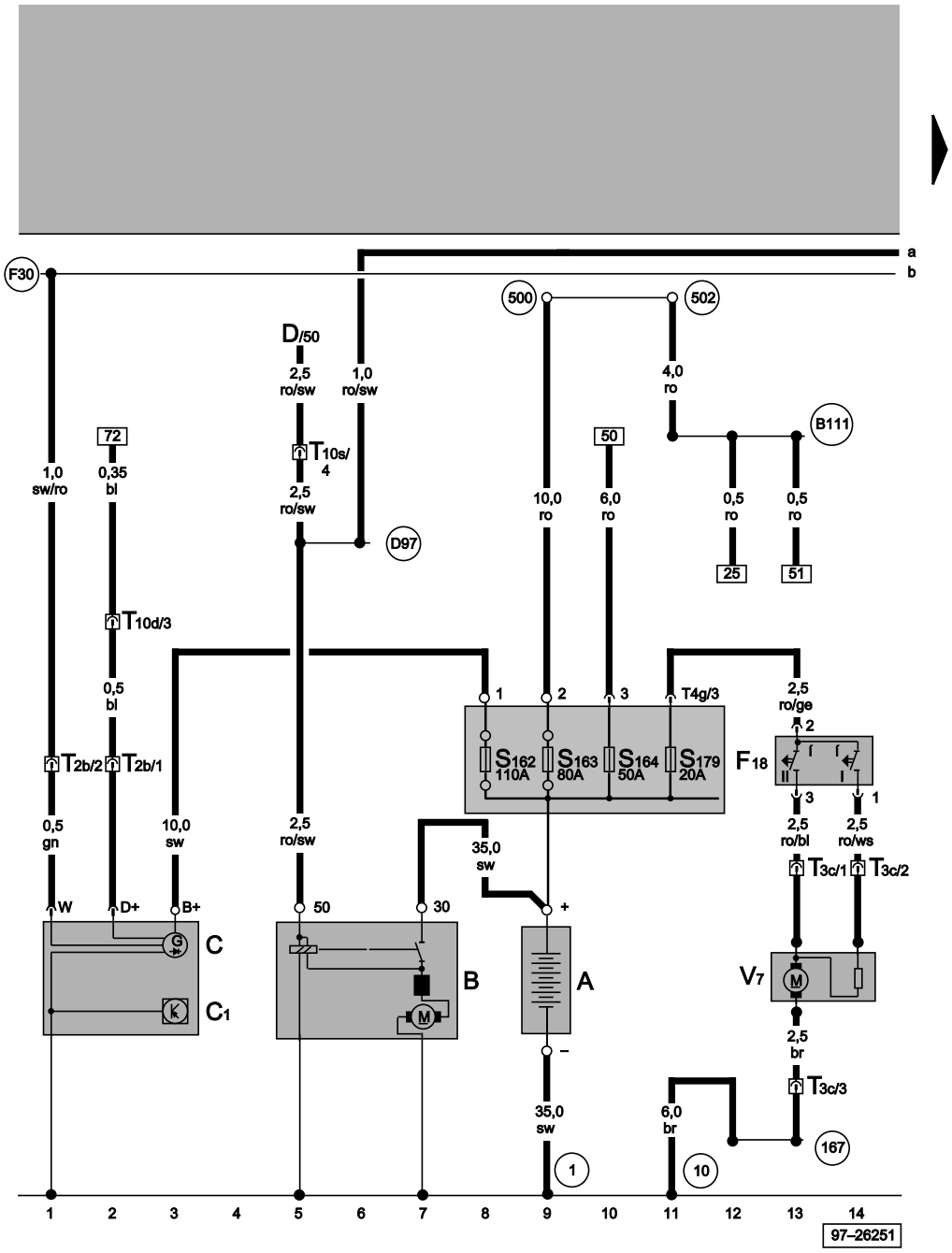

Battery, starter, alternator, radiator fan

A	Battery
B	Starter
C	Alternator
C1	Voltage regulator
D	Ignition/starter switch
F18	Radiator fan thermo-switch
S162	Fuse -1- (30), in battery fuse box
S163	Fuse -2- (30), in battery fuse box
S164	Fuse -3- (30), in battery fuse box
S179	Fuse -7- (30), in battery fuse box
T2b	2-pin connector, black
T3c	3-pin connector, black
T4g	4-pin connector, black
T10d	10-pin connector, red, near relay station
T10s	10-pin connector, light green, near relay station
V7	Radiator fan
1	Earth strap, battery - body
10	Earth point, in plenum chamber
167	Earth connection -4-, in engine compartment wiring harness
500	Screw connection -1- (30), on relay plate
502	Screw connection -3- (30), on relay plate
B111	Positive (+) connection -1- (30a), in interior wiring harness
D97	Connection (50), in engine compartment wiring harness, right
F30	Connection -1-, in glow plug system wiring harness

ws	=	white
sw	=	black
ro	=	red
br	=	brown
gn	=	green
bl	=	blue
gr	=	grey
li	=	purple
ge	=	yellow
or	=	orange
rs	=	pink

Protected by copyright. Copying for private or commercial purposes, in part or in whole, is not permitted unless authorised by Volkswagen AG. Volkswagen AG does not guarantee or accept any liability with respect to the correctness of information in this document. Copyright by Volkswagen AG.
satelettronica

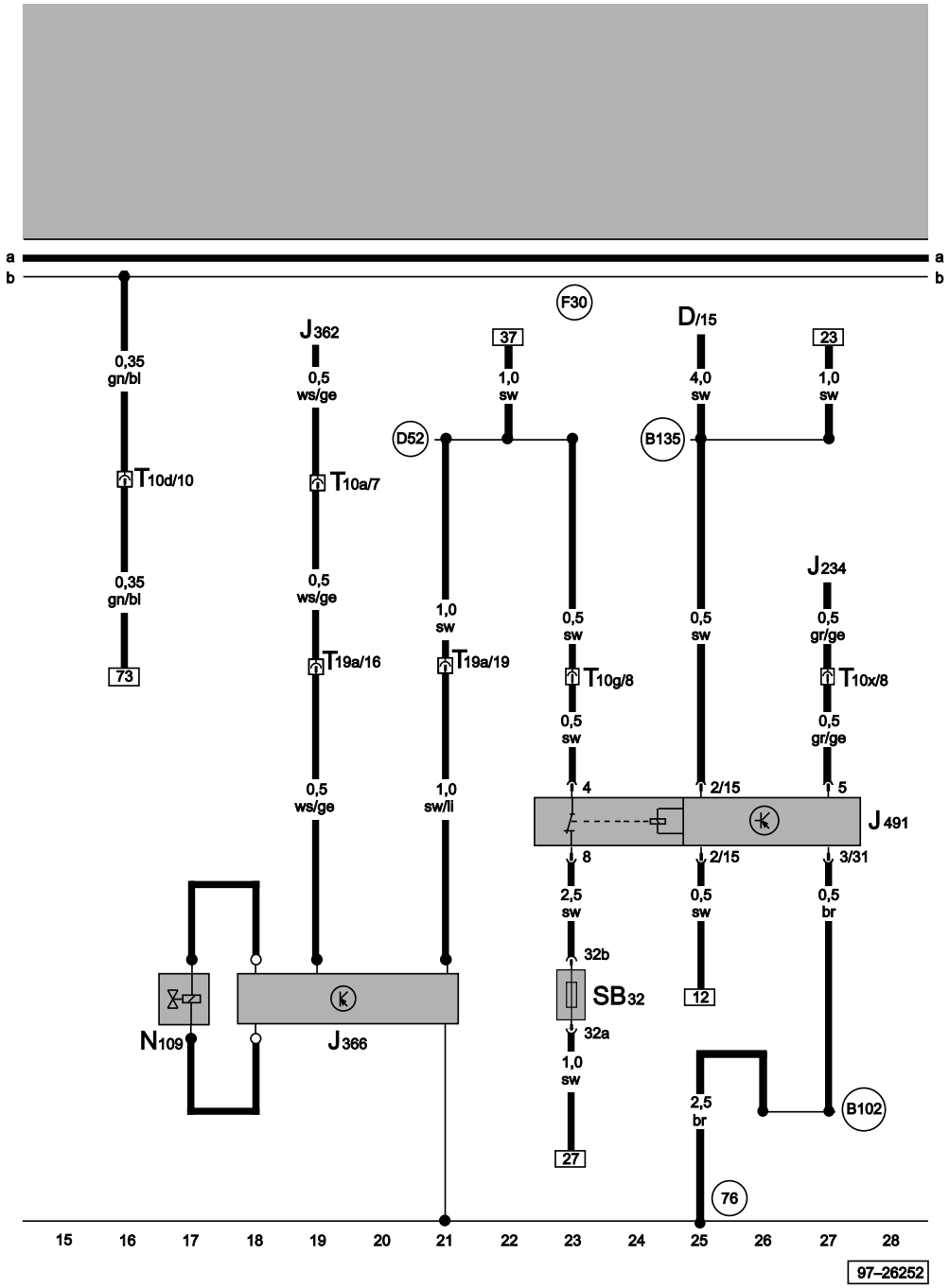

Fuel shut-off valve, fuel shut-off valve control unit, fuel shut-off control unit (Crash)

D	Ignition/starter switch
J234	Airbag control unit
J362	Immobilizer control unit, next to steering column
J366	Fuel shut-off valve control unit, on the diesel injection pump
J491	Fuel shut-off control unit (Crash)
N109	Fuel shut-off valve
SB32	Fuse -32- in relay plate fuse box
T10a	10-pin connector, green, near relay station
T10d	10-pin connector, red, near relay station
T10g	10-pin connector, brown, near relay station
T10x	10-pin connector, yellow, near relay station
T19a	19-pin connector, black, on engine
76	Earth point, near selector mechanism
B102	Earth connection, in front left interior wiring harness
B135	Connection -1- (15a), in interior wiring harness
D52	Positive (+) connection (15a) , in engine compartment wiring harness
F30	Connection -1-, in glow plug system wiring harness

ws	=	white
sw	=	black
ro	=	red
br	=	brown
gn	=	green
bl	=	blue
gr	=	grey
li	=	purple
ge	=	yellow
or	=	orange
rs	=	pink

Protected by copyright. Copying for private or commercial purposes, in part or in whole, is not permitted unless authorised by Volkswagen AG. Volkswagen AG does not guarantee or accept any liability with respect to the correctness of information in this document. Copyright by Volkswagen AG.
satelettronica

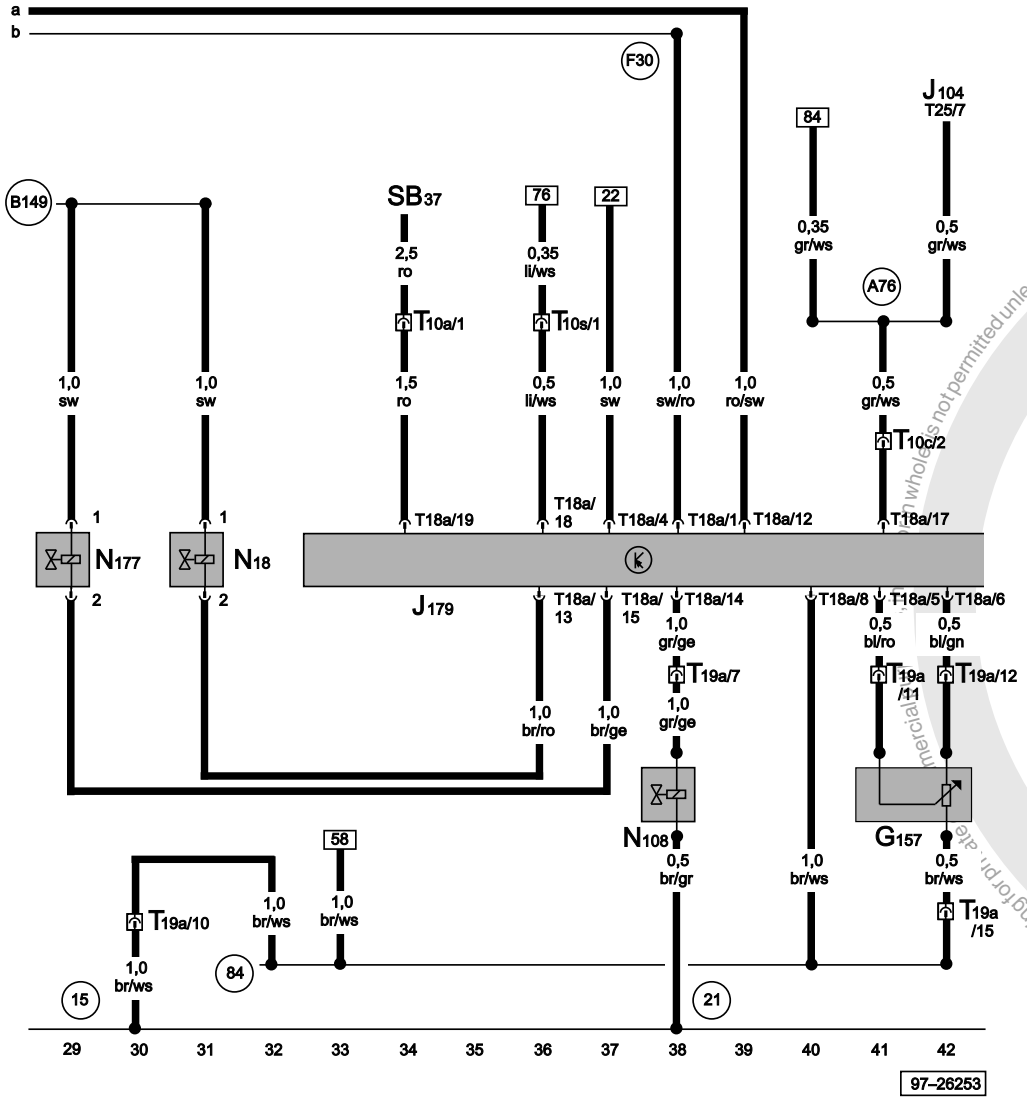

Automatic glow period control unit, commencement of injection valve, load signal potentiometer, exhaust gas recirculation valve, idling speed boost valve

G157	Load signal potentiometer
J104	ABS control unit, in engine compartment, left
J179	Automatic glow period control unit, above the relay plate
N18	Exhaust gas recirculation valve
N108	Commencement of injection valve
N177	Idling speed boost valve
SB37	Fuse -37- in relay plate fuse box
T10a	10-pin connector, green, near relay station
T10c	10-pin connector, blue, near relay station
T10s	10-pin connector, light green, near relay station
T18a	18-pin connector, black, on automatic glow period control unit
T19a	19-pin connector, black, on engine
T25	25-pin connector, black
15	Earth point, on cylinder head
21	Earth point, near diesel injection pump
84	Earth connection, engine block, in front right wiring harness
A76	Connection (diagnosis wire K), in dash panel wiring harness
B149	Connection -2- (15a), in interior wiring harness
F30	Connection -1-, in glow plug system wiring harness

ws	=	white
sw	=	black
ro	=	red
br	=	brown
gn	=	green
bl	=	blue
gr	=	grey
li	=	purple
ge	=	yellow
or	=	orange
rs	=	pink

Protected by copyright. Copying for private or commercial purposes, in whole or in part, is not permitted unless authorised by Volkswagen AG. Volkswagen AG does not guarantee or accept any liability with respect to the correctness of information in this document. Copyright by Volkswagen AG.
satelettronica

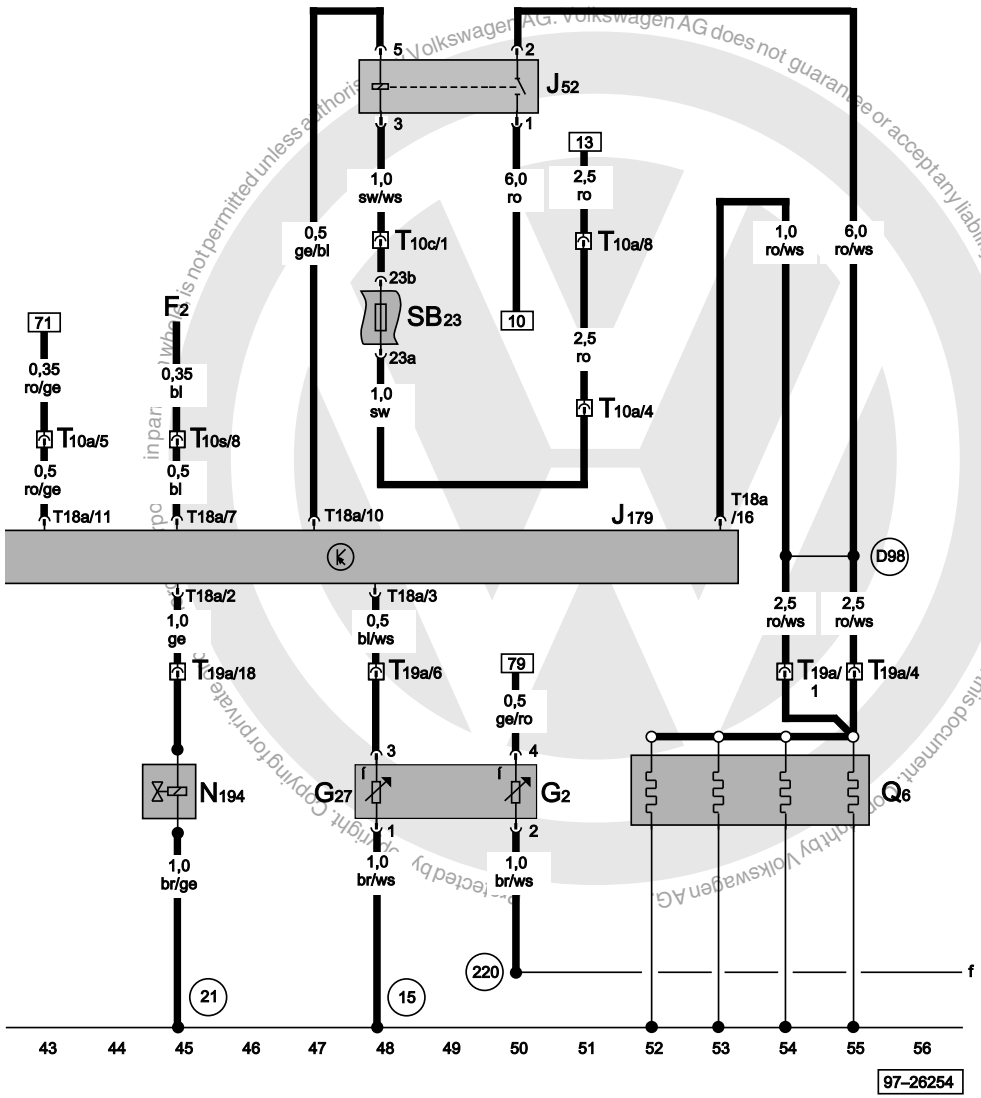

Automatic glow period control unit, engine temperature sender, coolant temperature sender, full load stop valve, glow plugs, glow plugs relay

F2	Door contact switch, driver side
G2	Coolant temperature sender
G27	Engine temperature sender
J52	Glow plug relay, near relay station
J179	Automatic glow period control unit, above the relay plate
N194	Full throttle limit valve
Q6	Glow plugs
SB23	Fuse -23- on fuse holder
T10a	10-pin connector, green, near relay station
T10c	10-pin connector, blue, near relay station
T10s	10-pin connector, light green, near relay station
T18a	18-pin connector, black, on automatic glow period control unit
T19a	19-pin connector, black, on engine
15	Earth point, on cylinder head
21	Earth point, near diesel injection pump
220	Earth connection (sender earth), in engine wiring harness
D98	Connection (glow plugs), in engine compartment wiring harness

ws	=	white
sw	=	black
ro	=	red
br	=	brown
gn	=	green
bl	=	blue
gr	=	grey
li	=	purple
ge	=	yellow
or	=	orange
rs	=	pink

satelettronica

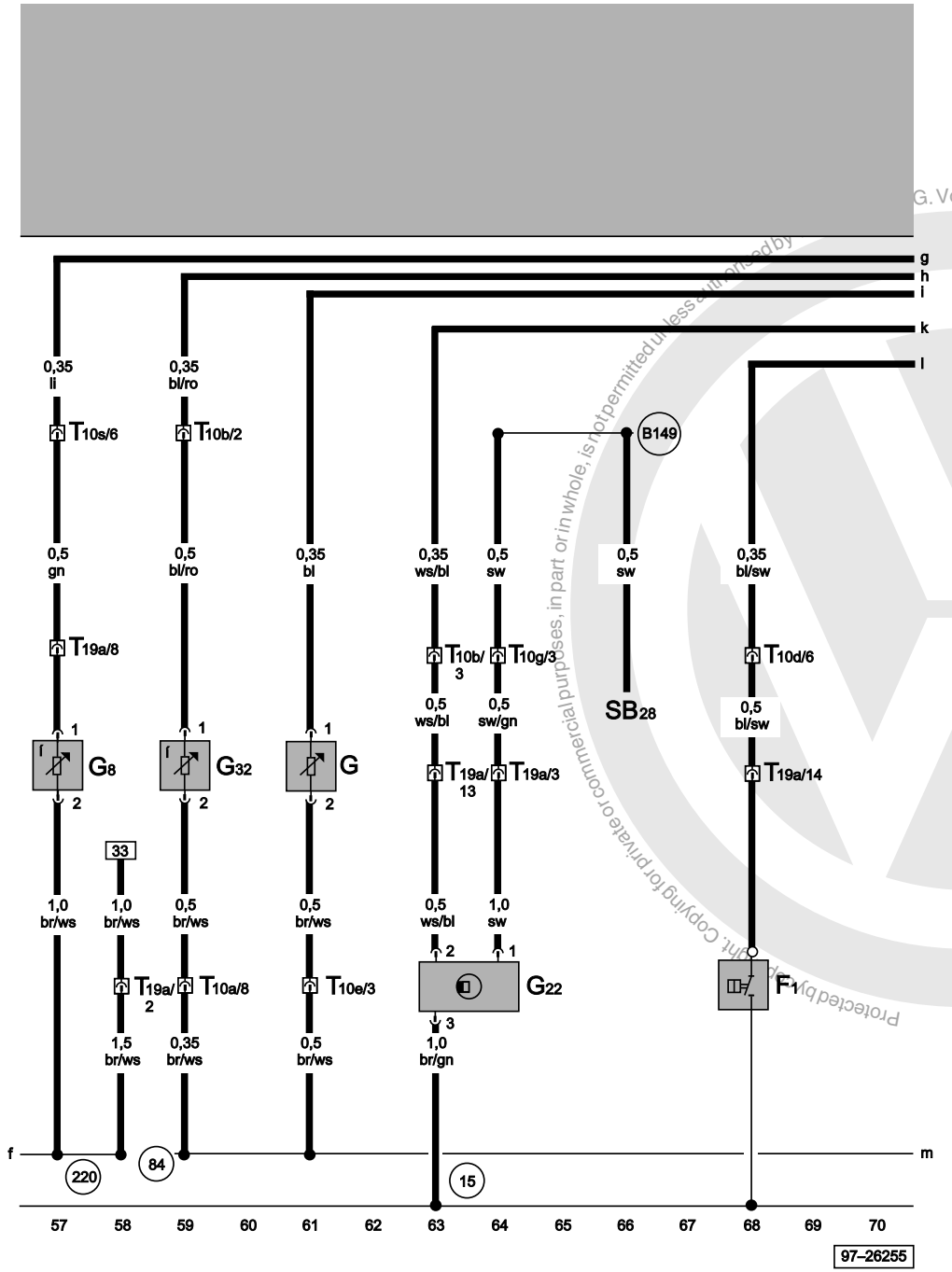

Coolant shortage indicator sender, fuel gauge sender, speedometer sender, oil temperature sender, oil pressure switch

F1	Oil pressure switch
G	Fuel gauge sender
G8	Oil temperature sender
G22	Speedometer sender (Hall sender on gearbox)
G32	Coolant shortage indicator sender
SB28	Fuse -28- on fuse holder
T10a	10-pin connector, green, near relay station
T10b	10-pin connector, black, near relay station
T10d	10-pin connector, red, near relay station
T10e	10-pin connector, light pink, near relay station
T10g	10-pin connector, brown, near relay station
T10s	10-pin connector, light green, near relay station
T19a	19-pin connector, black, on engine
15	Earth point, on cylinder head
84	Earth connection, engine block, in front right wiring harness
220	Earth connection (sender earth), in engine wiring harness
B149	Positive connection -2- (15a), in interior wiring harness

ws	=	white
sw	=	black
ro	=	red
br	=	brown
gn	=	green
bl	=	blue
gr	=	grey
li	=	purple
ge	=	yellow
or	=	orange
rs	=	pink

Protected by copyright. Copying for private or commercial purposes, in part or in whole, is not permitted unless authorised by G. Volkswagen AG does not guarantee or assume any liability with respect to the correctness of information in this document. Copyright by Volkswagen AG.
satelettronica

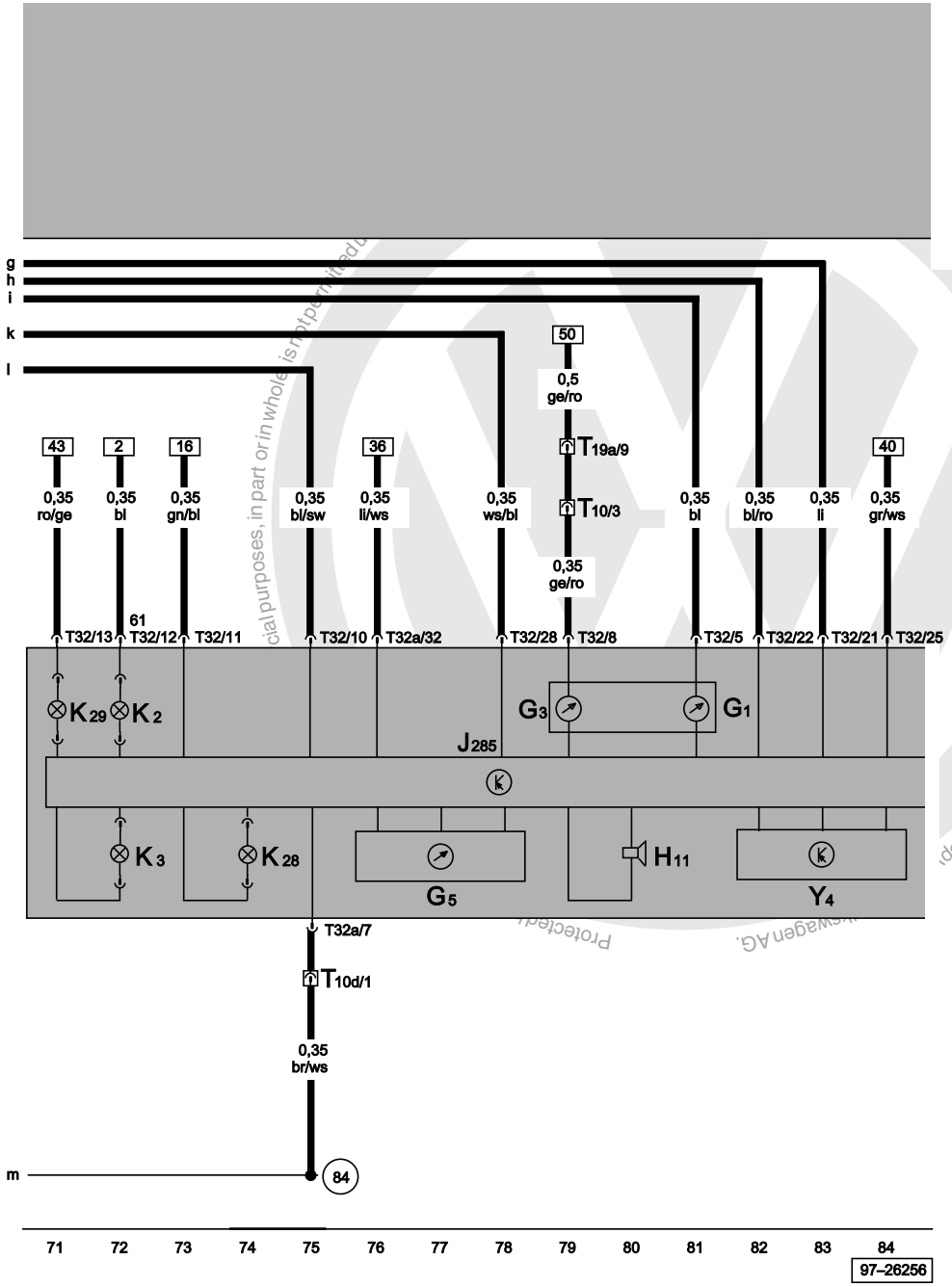

Dash panel insert, fuel gauge, coolant shortage/coolant temperature warning lamp, optical and acoustical oil pressure warning, alternator warning lamp, glow period warning lamp

G1	Fuel gauge
G3	Coolant temperature gauge
G5	Rev. counter
H11	Oil pressure warning buzzer
J285	Control unit with display in dash panel insert
K2	Alternator warning lamp
K3	Oil pressure warning lamp
K28	Coolant temperature/coolant shortage warning lamp
K29	Glow period warning lamp
T10	10-pin connector, white, near relay station
T10d	10-pin connector, red, near relay station
T19a	19-pin connector, black, on engine
T32	32-pin connector, blue, on dash panel insert
T32a	32-pin connector, black, on dash panel insert
Y4	Odometer display
84	Earth connection, engine block, in front right wiring harness

ws	=	white
sw	=	black
ro	=	red
br	=	brown
gn	=	green
bl	=	blue
gr	=	grey
li	=	purple
ge	=	yellow
or	=	orange
rs	=	pink

satelettronica

⇒ 1.7 litre/42 kW Naturally aspirated diesel, engine code AHG
⇒ 1.7 litre/44 kW Naturally aspirated diesel, engine code AKU
⇒ 1.9 litre/47 kW Naturally aspirated diesel, engine code AGD
From October 1999

⇒ 1.9 litre/47 kW Naturally aspirated diesel, engine code ASX
From May 2000

For alternatives to relay and fuse positions as well as multi-pin connector wiring - see "Fitting locations" section.

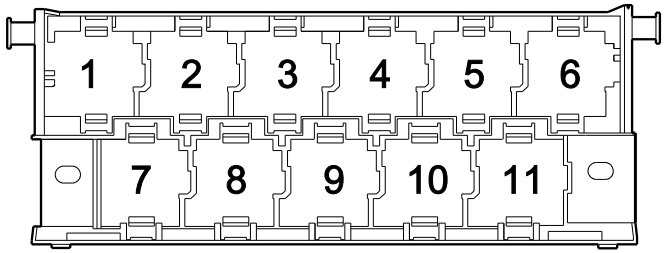

97-22850

Fuse colours

30 A - green
25 A - white
20 A - yellow
15 A - blue
10 A - red
7.5 A - brown
5 A - beige
3 A - lilac

Protected by copyright. Copying for private or commercial purposes, in part or in whole, is not permitted unless authorised by Volkswagen AG. Volkswagen AG does not guarantee or accept any liability with respect to the correctness of information in this document. Copyright by Volkswagen AG.

satelettronica

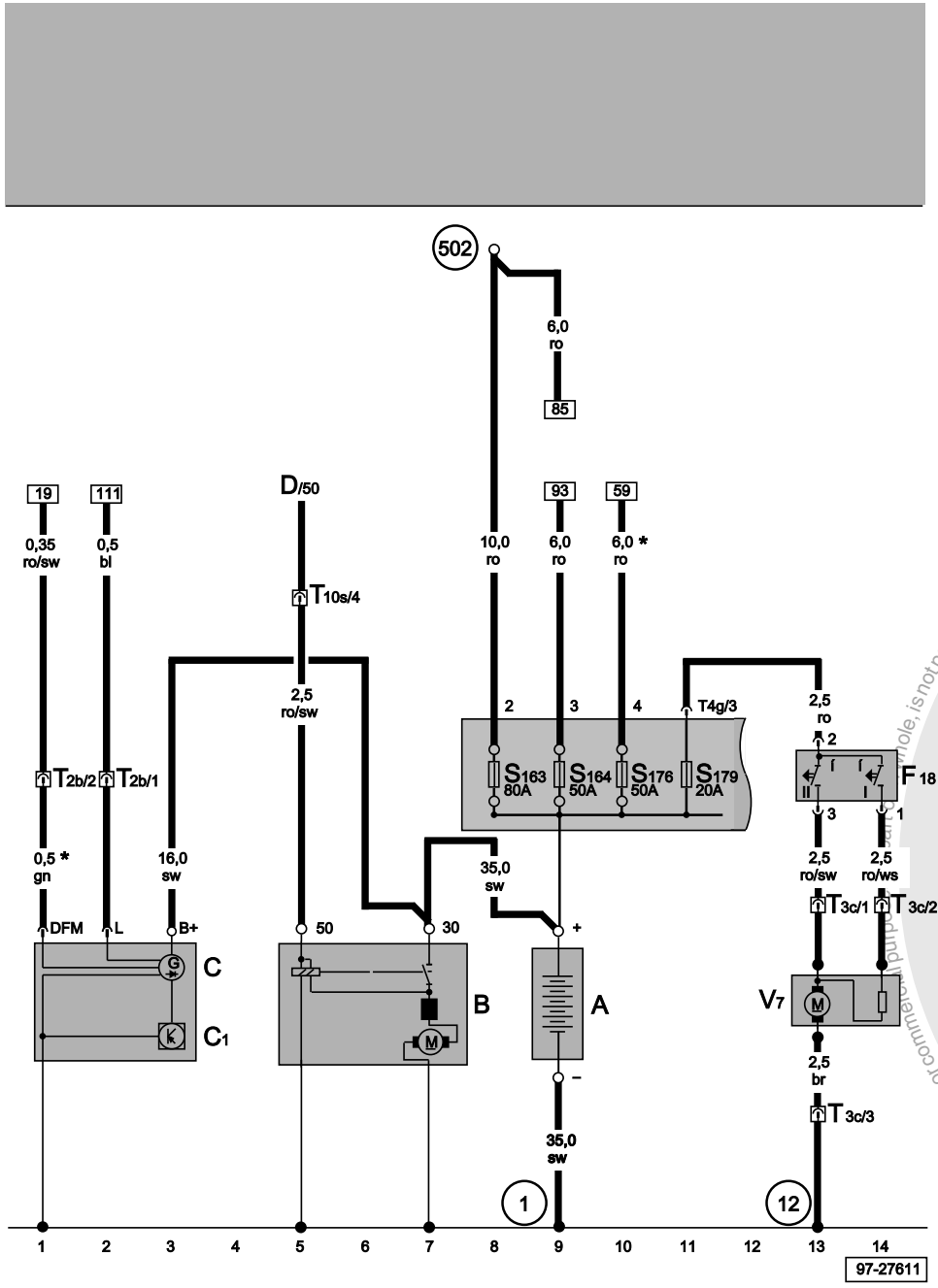

Battery, starter, alternator, radiator fan

A	Battery
B	Starter
C	Alternator
C1	Voltage regulator
D	Ignition/starter switch
F18	Radiator fan thermo-switch
S163	Fuse -2- (30), in fuse box/battery
S164	Fuse -3- (30), in fuse box/battery
S176	Fuse -4- (30), in fuse box/battery
S179	Fuse -7- (30), in fuse box/battery
T2b	2-pin connector, black, near alternator
T3c	3-pin connector, black, on radiator fan
T4g	4-pin connector, black, on battery fuse box
T10s	10-pin connector, light green, connector point under relay carrier
V7	Radiator fan
1	Earth strap, battery - body
12	Earth point, in engine compartment, left
502	Screw connection -3- (30), on relay plate
*	Only coolant heater element

ws	=	white
sw	=	black
ro	=	red
br	=	brown
gn	=	green
bl	=	blue
gr	=	grey
li	=	purple
ge	=	yellow
or	=	orange
rs	=	pink

Protected by copyright. Copying for private or commercial purposes, in whole or in part, is not permitted unless authorised by Volkswagen AG. Volkswagen AG does not guarantee or accept any liability with respect to the correctness of information in this document. Copyright by Volkswagen AG.
satelettronica

Diesel direct injection system control unit, engine speed sender, intake air temperature sender, immobilizer control unit

G28	Engine speed sender
G42	Intake air temperature sender
J248	Diesel direct injection system control unit, in plenum chamber, right
J362	Immobilizer control unit
T3a	3-pin connector, black, on cylinder head, left
T10a	10-pin connector, green, connector point under relay carrier
T10d	10-pin connector, red, connector point under relay carrier
T121	121-pin connector, on diesel direct injection system control unit
10	Earth point, in plenum chamber
12	Earth point, in engine compartment, left
F27	Connection (screening), in diesel direct injection system wiring harness
*	Only coolant heater element
**	Does not apply to coolant heater element

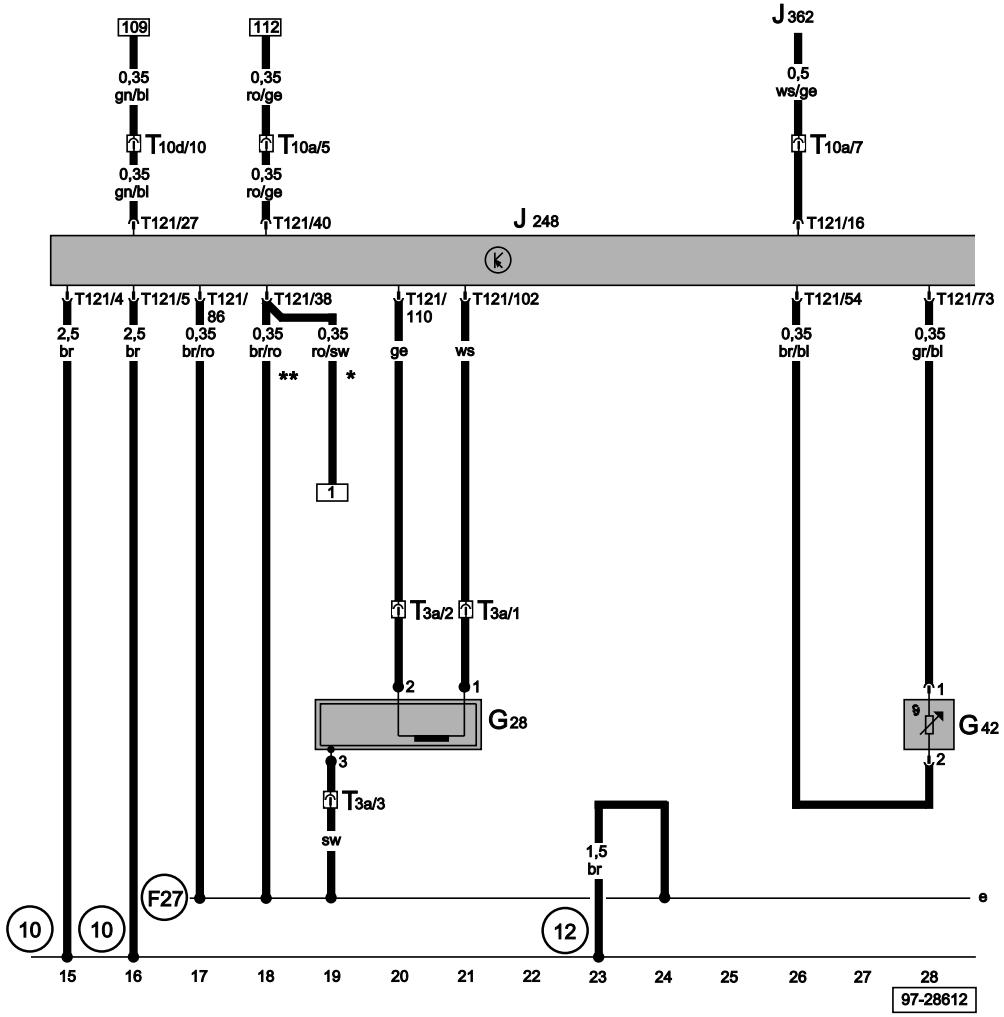

ws	=	white
sw	=	black
ro	=	red
br	=	brown
gn	=	green
bl	=	blue
gr	=	grey
li	=	purple
ge	=	yellow
or	=	orange
rs	=	pink

Protected by copyright. Copying for private or commercial purposes, in part or in whole, is not permitted unless authorised by Volkswagen AG. Volkswagen AG does not guarantee or accept any liability with respect to the correctness of information in this document. Copyright by Volkswagen AG.
satelettronica

Diesel direct injection system control unit, needle lift sender, exhaust gas recirculation valve, fuel shut-off control unit (Crash)

D	Ignition/starter switch
G80	Needle lift sender
J234	Airbag control unit
J248	Diesel direct injection system control unit, in plenum chamber, right
J491	Fuel shut-off control unit (Crash)
N18	Exhaust gas recirculation valve
SB32	Fuse -32- in relay plate fuse box
T2a	2-pin connector, brown, on cylinder head, left, near injection pump
T10g	10-pin connector, brown, connector point under relay carrier
T10x	10-pin connector, yellow, connector point under relay carrier
T121	121-pin connector, on diesel direct injection system control unit
76	Earth point, near selector mechanism
B102	Earth connection, in front left interior wiring harness
B135	Connection -1- (15a), in interior wiring harness
B235	Positive (+) connection -4- (15a), in interior wiring harness
F27	Connection (screening), in diesel direct injection system wiring harness

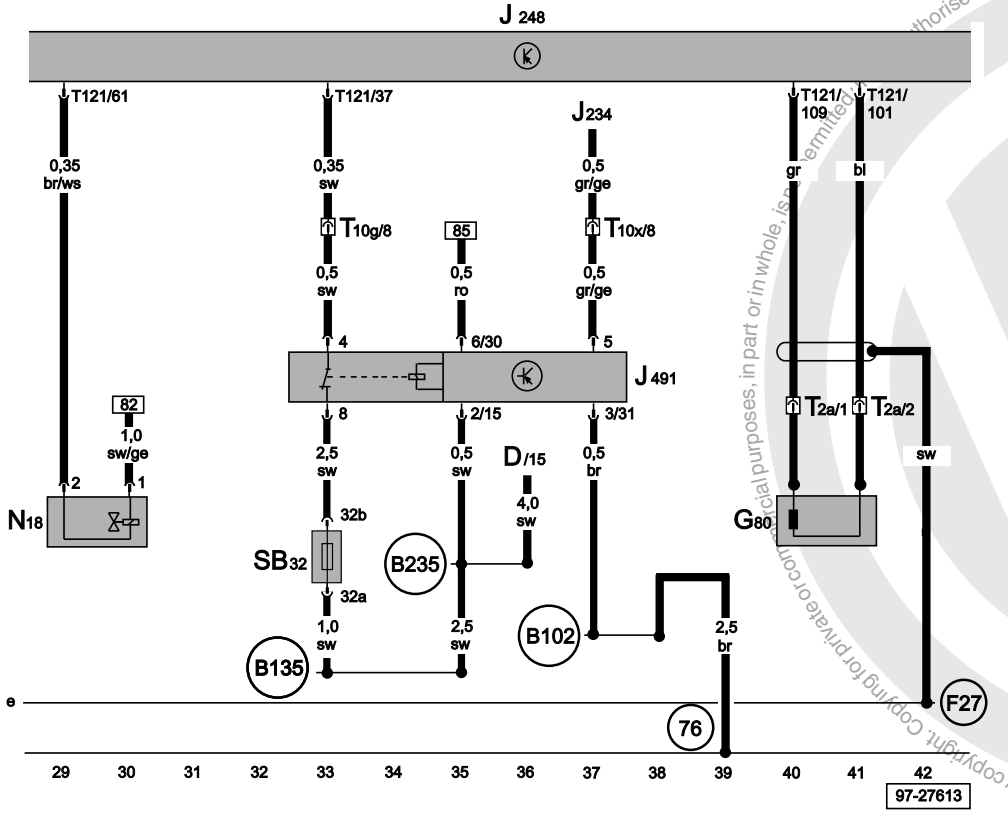

ws	=	white
sw	=	black
ro	=	red
br	=	brown
gn	=	green
bl	=	blue
gr	=	grey
li	=	purple
ge	=	yellow
or	=	orange
rs	=	pink

Protected by copyright. Copying for private or commercial purposes, in part or in whole, is not permitted unless authorised by Volkswagen AG. Volkswagen AG does not guarantee or accept any liability with respect to the correctness of information in this document. Copyright by Volkswagen AG.
satelettronica

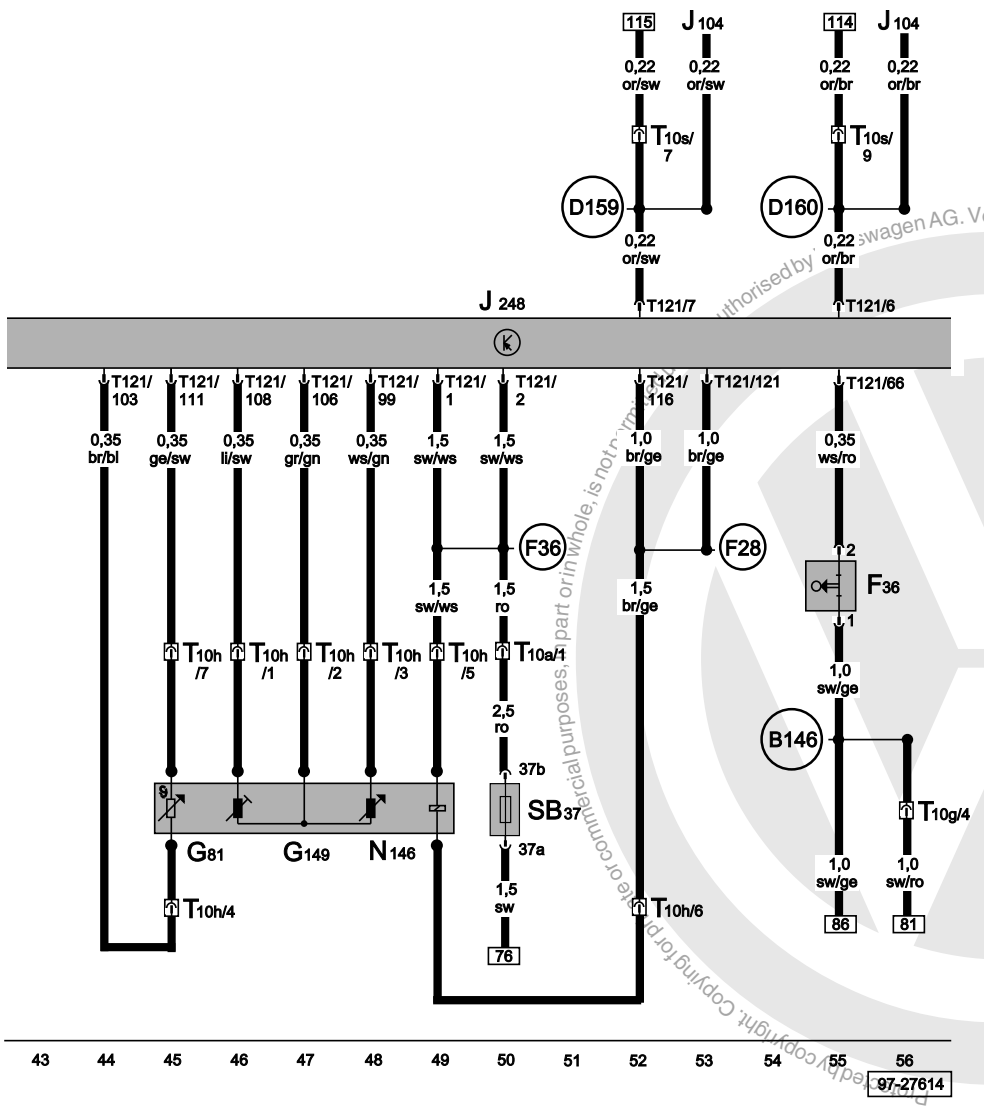

Diesel direct injection system control unit, metering adjuster, fuel temperature sender, modulating piston movement sender, clutch pedal switch

F36	Clutch pedal switch
G81	Fuel temperature sender
G149	Modulating piston movement sender
J104	ABS/ABS with EDL control unit
J248	Diesel direct injection system control unit, in plenum chamber, right
N146	Metering adjuster
SB37	Fuse -37- in relay plate fuse box
T10a	10-pin connector, green, connector point under relay carrier
T10g	10-pin connector, brown, connector point under relay carrier
T10h	10-pin connector, black, on cylinder head, left
T10s	10-pin connector, grey, connector point under relay carrier
T121	121-pin connector, on diesel direct injection system control unit
B146	Positive (+) connection -1- (87), in interior wiring harness
D159	Connection (high bus), in engine compartment wiring harness
D160	Connection (low bus), in engine compartment wiring harness
F28	Connection -3-, in diesel direct injection system wiring harness
F36	Connection (87a), in diesel direct injection wiring harness

ws	=	white
sw	=	black
ro	=	red
br	=	brown
gn	=	green
bl	=	blue
gr	=	grey
li	=	purple
ge	=	yellow
or	=	orange
rs	=	pink

satelettronica

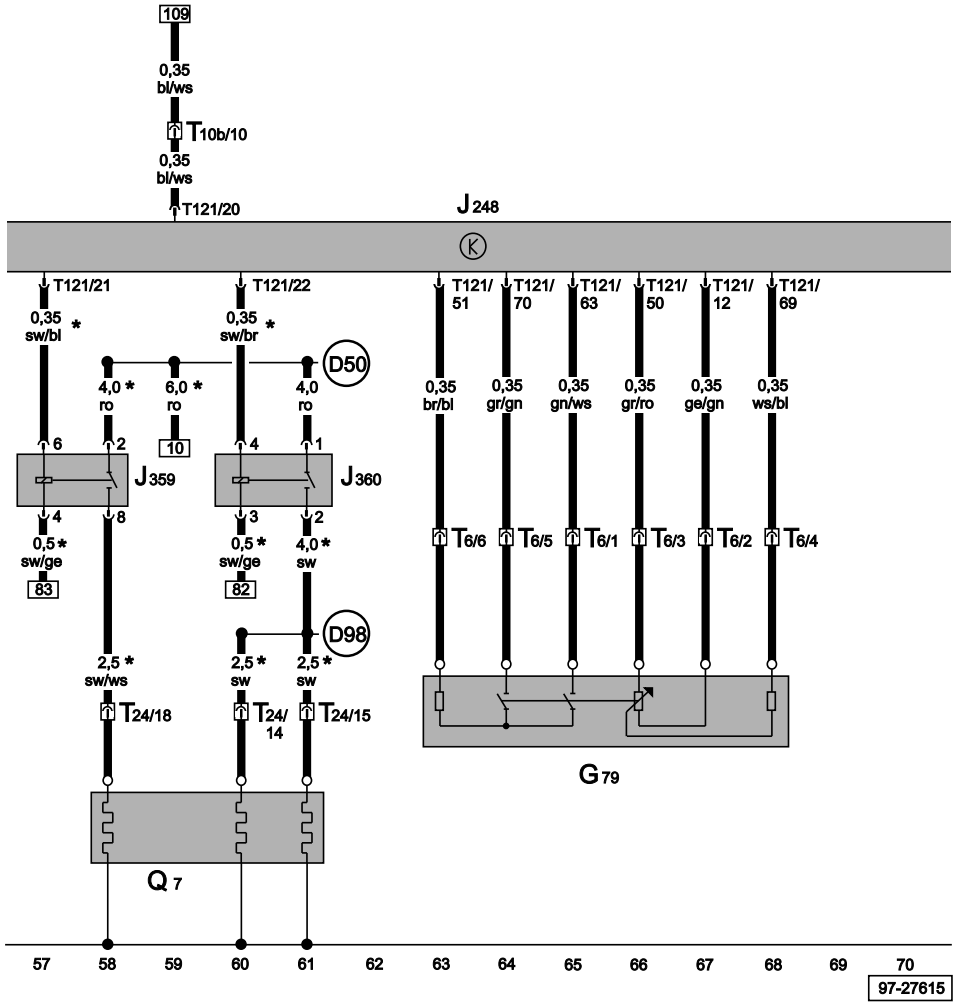

Diesel direct injection system control unit, accelerator pedal position sender, low heat output relay, high heat output relay, coolant heating elements

G79	Accelerator pedal position sender
J248	Diesel direct injection system control unit, in plenum chamber, right
J359	Low heat output relay
J360	High heat output relay
Q7	Coolant heating elements
T6	6-pin connector, black, in footwell, front left
T10b	10-pin connector, black, connector point under relay carrier
T24	24-pin connector, black, on cylinder head, left
T121	121-pin connector, on diesel direct injection system control unit
D50	Positive (+) connection (30), in engine compartment wiring harness
D98	Connection (glow plugs), in engine compartment wiring harness
*	Only coolant heater element

ws	=	white
sw	=	black
ro	=	red
br	=	brown
gn	=	green
bl	=	blue
gr	=	grey
li	=	purple
ge	=	yellow
or	=	orange
rs	=	pink

Protected by copyright. Copying for private or commercial purposes, in part or in whole, is not permitted unless authorised by Volkswagen AG. Volkswagen AG does not guarantee or accept any liability with respect to the correctness of information in this document. Copyright by Volkswagen AG.
satelettronica

Diesel direct injection system control unit, engine and coolant temperature sender, fuel shut-off valve, voltage supply relay, commencement of injection valve, throttle butterfly valve

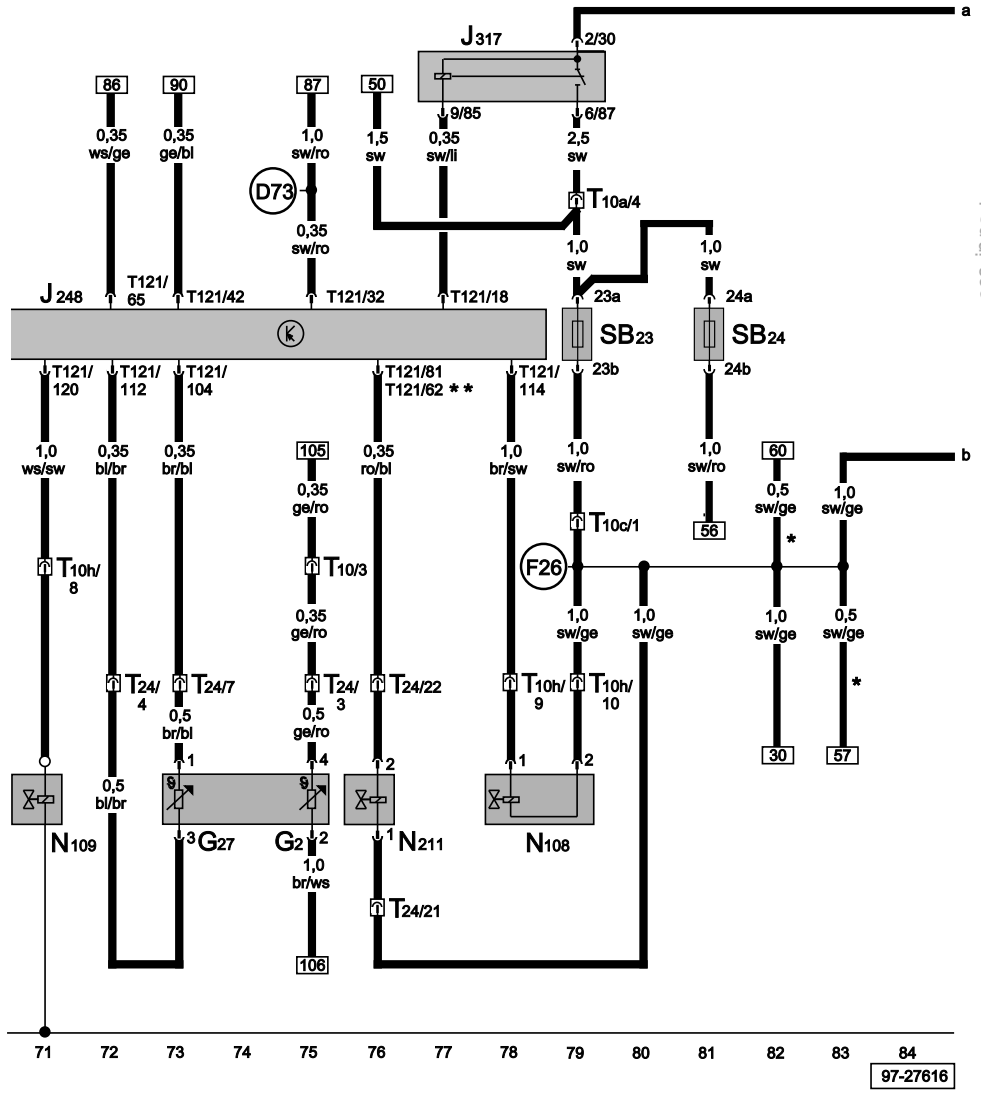

G2	Coolant temperature sender
G27	Engine temperature sender
J248	Diesel direct injection system control unit, in plenum chamber, right
J317	Terminal 30 voltage supply relay
N108	Commencement of injection valve
N109	Fuel shut-off valve
N211	Throttle butterfly valve
SB23	Fuse -23- in relay plate fuse box
SB24	Fuse -24- in relay plate fuse box
T10	10-pin connector, white, connector point under relay carrier
T10a	10-pin connector, green, connector point under relay carrier
T10c	10-pin connector, blue, connector point under relay carrier
T10h	10-pin connector, black, near injection pump
T24	24-pin connector, black, on cylinder head, left
T121	121-pin connector, on diesel direct injection system control unit
D73	Positive (+) connection (54), in engine compartment wiring harness
F26	Connection -2-, in diesel direct injection system wiring harness
*	Only coolant heater element
**	Only engine codes ASX

ws	=	white
sw	=	black
ro	=	red
br	=	brown
gn	=	green
bl	=	blue
gr	=	grey
li	=	purple
ge	=	yellow
or	=	orange
rs	=	pink

Protected by copyright. Copying for private or commercial purposes, in part or in whole, is not permitted unless authorised by Volkswagen AG. Volkswagen AG does not guarantee or accept any liability with respect to the correctness of information in this document. Copyright by Volkswagen AG.
satelettronica

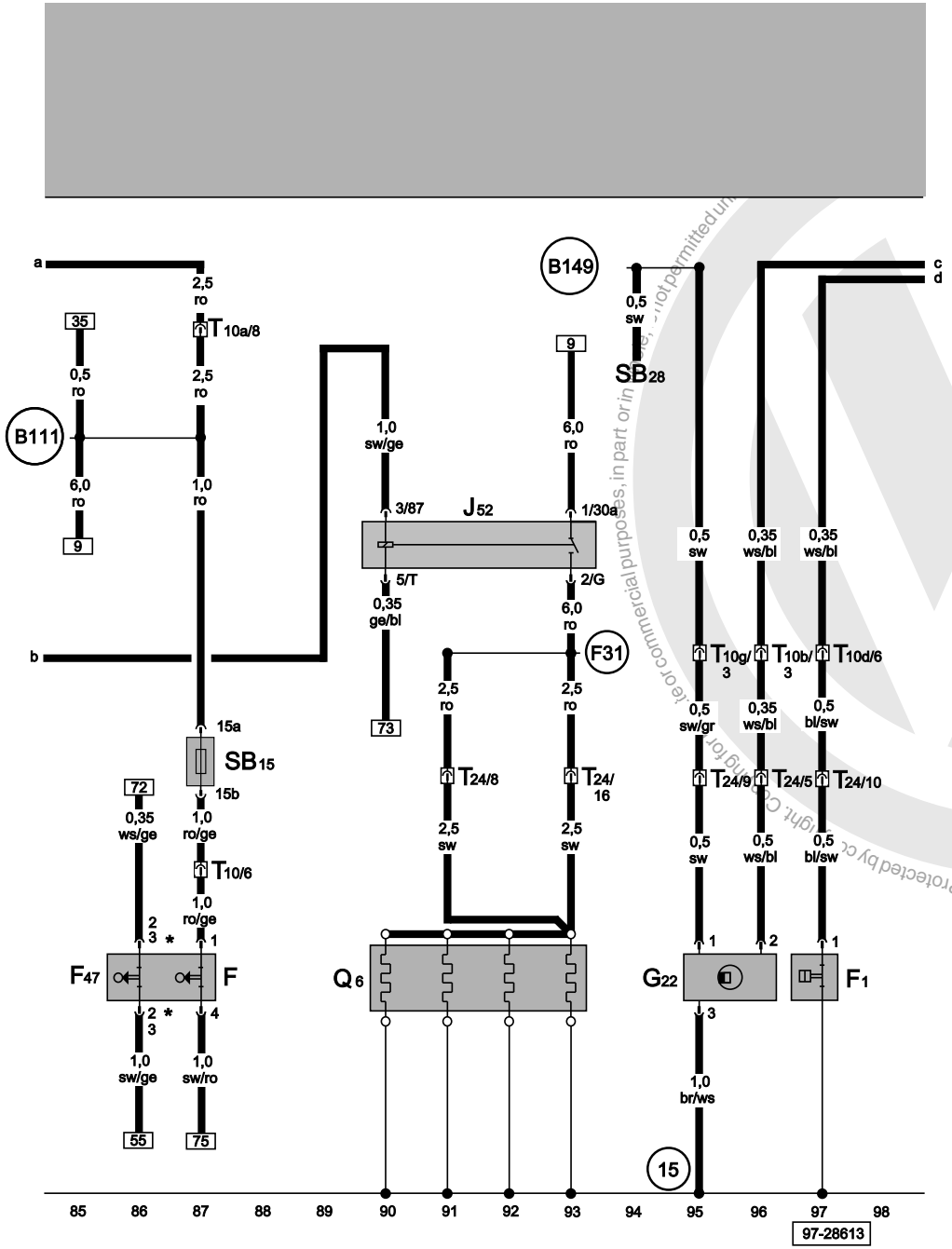

Brake light switch, speedometer sender, glow plugs - (engine), glow plug relay (engine), oil pressure switch, brake pedal switch

F	Brake light switch
F1	Oil pressure switch
F47	Cruise control system brake pedal switch/diesel direct inj. system
G22	Speedometer sender (Hall sender, on gearbox)
J52	Glow plug relay
Q6	Glow plugs - (engine)
SB15	Fuse -15- in relay plate fuse box
SB28	Fuse -28- in relay plate fuse box
T10	10-pin connector, white, connector point under relay carrier
T10a	10-pin connector, green, connector point under relay carrier
T10b	10-pin connector, black, connector point under relay carrier
T10d	10-pin connector, red, connector point under relay carrier
T10g	10-pin connector, brown, connector point under relay carrier
T24	24-pin connector, black, on cylinder head, left
15	Earth point, on cylinder head
B111	Positive (+) connection -1- (30a), in interior wiring harness
B149	Positive (+) connection -2- (15a), in interior wiring harness
F31	Connection (glow plugs - engine), in diesel direct injection system wiring harness
*	Only engine codes ASX

ws	=	white
sw	=	black
ro	=	red
br	=	brown
gn	=	green
bl	=	blue
gr	=	grey
li	=	purple
ge	=	yellow
or	=	orange
rs	=	pink

Protected by copyright. Copying for commercial purposes, in part or in whole, is not permitted unless authorised by Volkswagen AG. Volkswagen AG does not guarantee or accept any liability with respect to the correctness of information in this document. Copyright by Volkswagen AG.

satelettronica

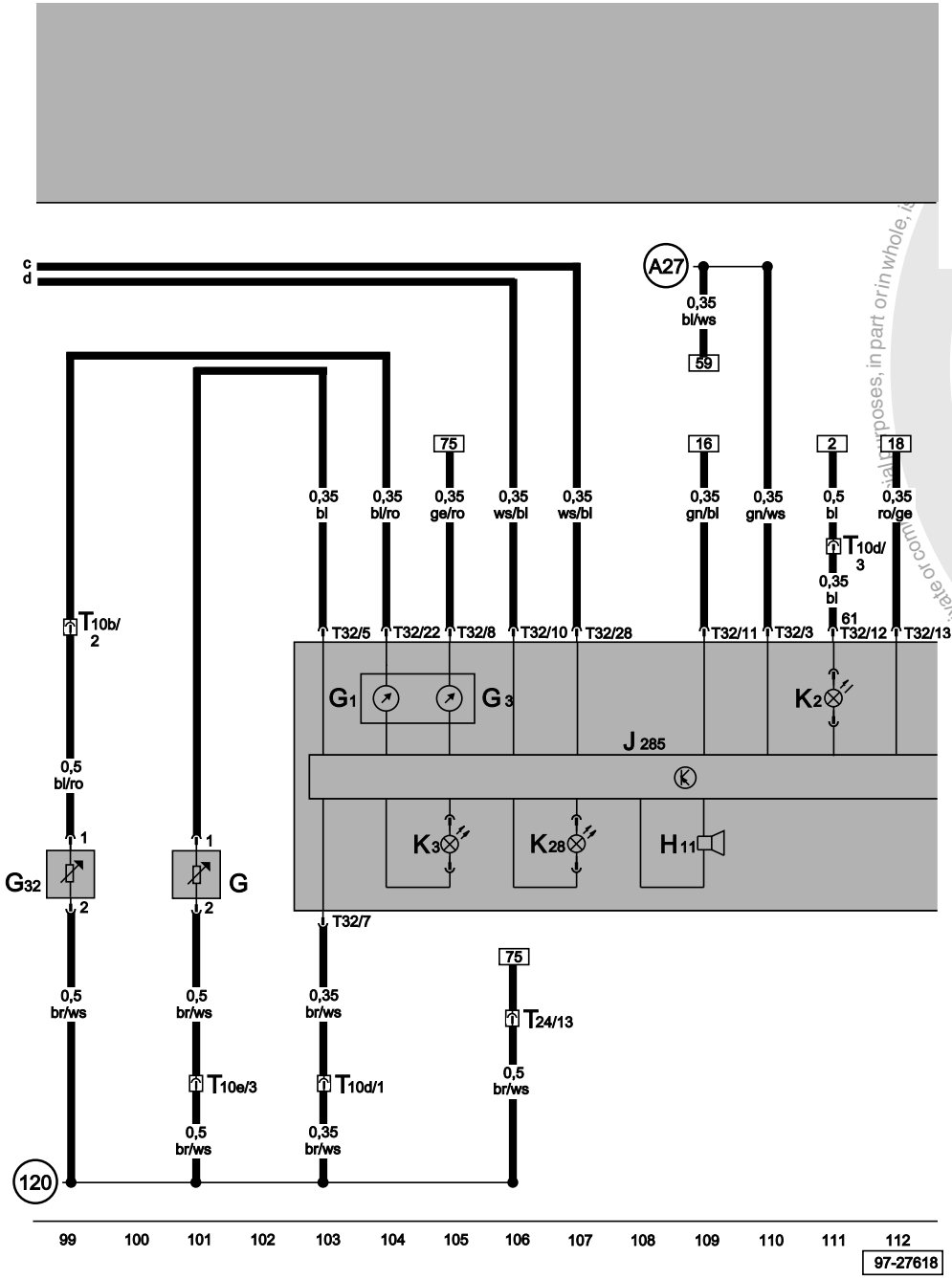

Dash panel insert, fuel gauge, coolant shortage and coolant temperature indicator, optical and acoustical oil pressure warning

G	Fuel gauge sender
G1	Fuel gauge
G3	Coolant temperature gauge
G32	Coolant shortage indicator sender
H11	Oil pressure warning buzzer
J285	Control unit with display in dash panel insert
K2	Alternator warning lamp
K3	Oil pressure warning lamp
K28	Coolant temperature/coolant shortage warning lamp
T10b	10-pin connector, black, connector point under relay carrier
T10e	10-pin connector, light pink, connector point under relay carrier
T10d	10-pin connector, red, connector point under relay carrier
T24	24-pin connector, black, on cylinder head, left
T32	32-pin connector, on dash panel insert
120	Earth connection -2-, in headlight wiring harness
A27	Connection (speed signal), in dash panel wiring harness

ws	=	white
sw	=	black
ro	=	red
br	=	brown
gn	=	green
bl	=	blue
gr	=	grey
li	=	purple
ge	=	yellow
or	=	orange
rs	=	pink

Protected by copyright. Copying for private or commercial purposes, in part or in whole, is not permitted unless authorised by Volkswagen AG. Volkswagen AG does not guarantee or accept any liability with respect to the correctness of information in this document. Copyright by Volkswagen AG.
satelettronica

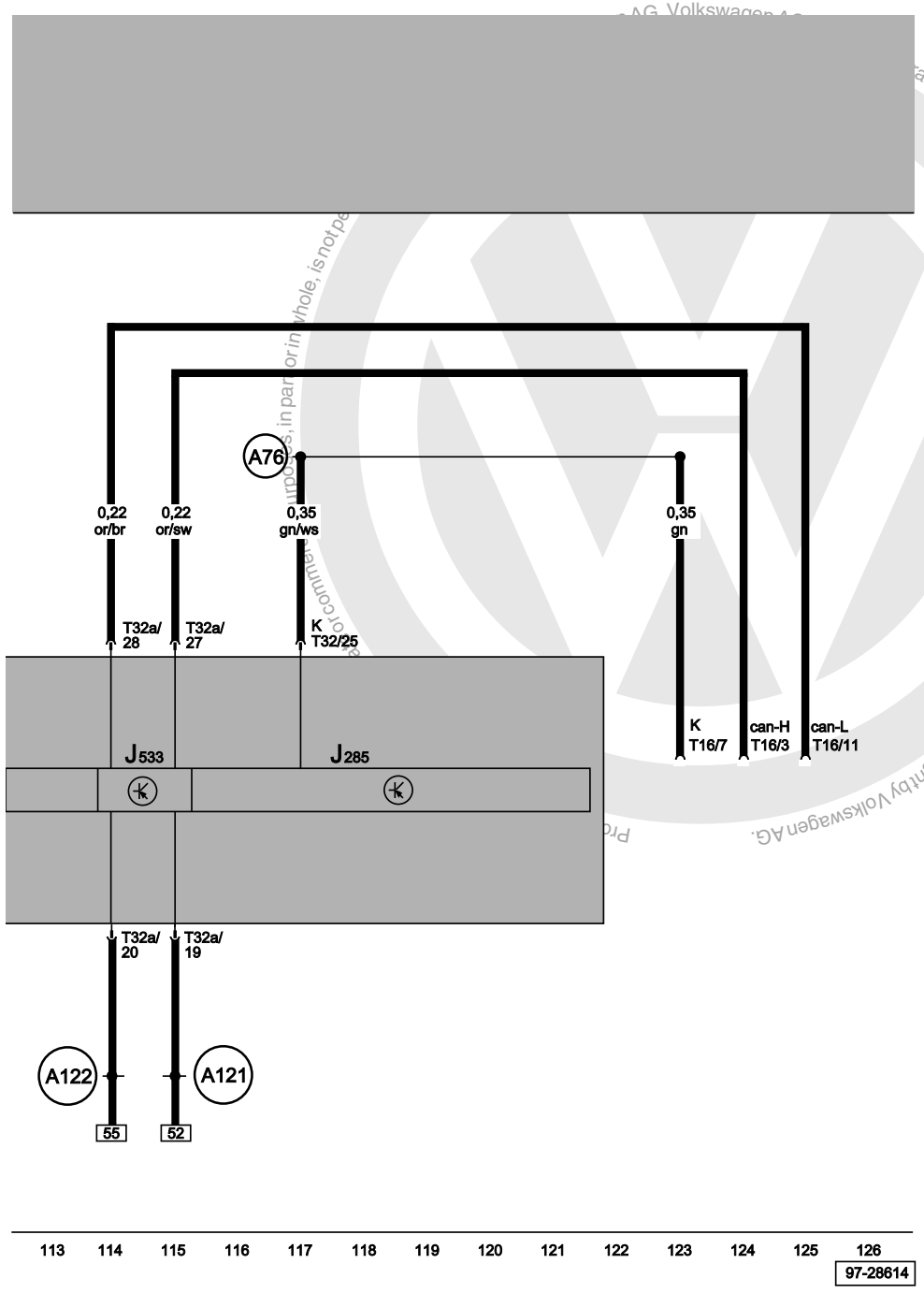

Dash panel insert, self-diagnosis connection, data bus diagnostic interface

J285	Control unit with display in dash panel insert
J533	Data bus diagnostic interface control unit
T16	16-pin connector, self-diagnosis connection
T32	32-pin connector, green, on dash panel insert
T32a	32-pin connector, blue, on dash panel insert
A76	Connection (diagnosis wire K), in dash panel wiring harness
A121	Connection (high bus), in dash panel wiring harness
A122	Connection (low bus), in dash panel wiring harness

ws	=	white
sw	=	black
ro	=	red
br	=	brown
gn	=	green
bl	=	blue
gr	=	grey
li	=	purple
ge	=	yellow
or	=	orange
rs	=	pink

satelettronica

1.4 ltr./55 kW - Turbo diesel engine with unit injectors, engine codes AMF

From October 1999

For alternatives to relay and fuse positions as well as multi-pin connector wiring - see "Fitting locations" section.

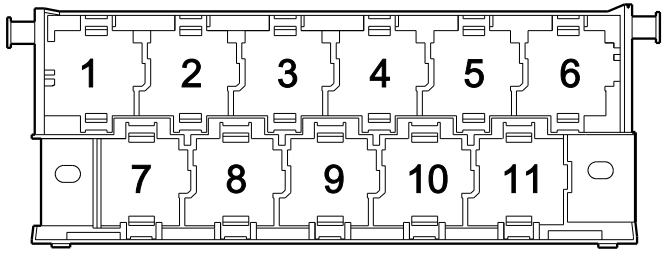

97-22850

Fuse colours

30 A - green
25 A - white
20 A - yellow
15 A - blue
10 A - red
7.5 A - brown
5 A - beige
3 A - lilac

Protected by copyright. Copying for private or commercial purposes, in part or in whole, is not permitted unless authorised by Volkswagen AG. Volkswagen AG does not guarantee or accept any liability with respect to the correctness of information in this document. Copyright by Volkswagen AG.

satelettronica

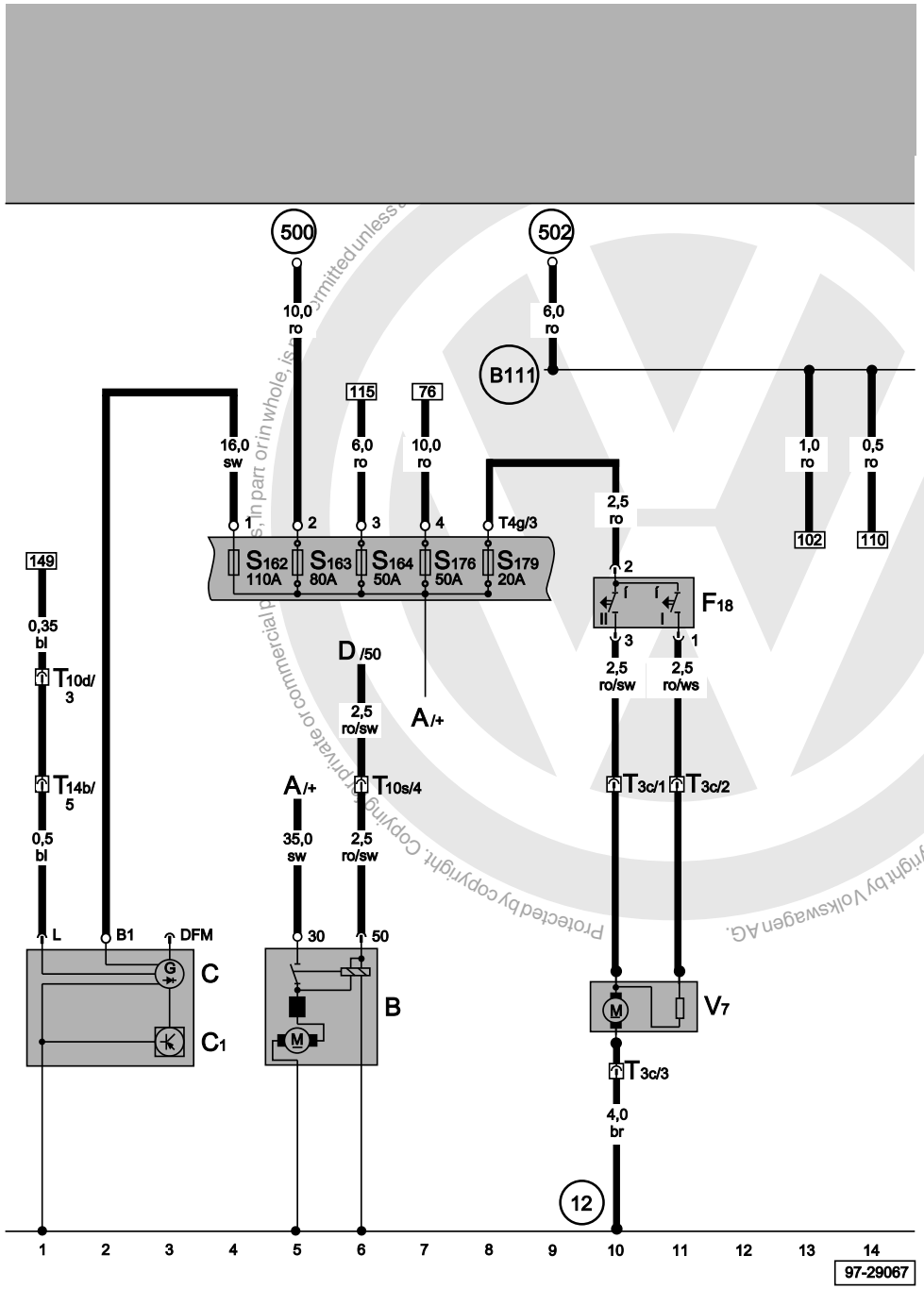

Alternator, voltage regulator, starter

A	Battery
B	Starter
C	Alternator
C1	Voltage regulator
D	Ignition/starter switch
F18	Radiator fan thermo-switch
S162	Fuse -1- (30), in fuse box/battery
S163	Fuse -2- (30), in fuse box/battery
S164	Fuse -3- (30), in fuse box/battery
S176	Fuse -4- (30), in battery fuse box
S179	Fuse -7- (30), in battery fuse box
T3c	3-pin connector, black, on radiator fan
T10d	10-pin connector, red, connector point under relay carrier
T10s	10-pin connector, light green, connector point under relay carrier
T14b	14-pin connector, in engine compartment, left
V7	Radiator fan
12	Earth point, in engine compartment, left
500	Screw connection -1- (30), on relay plate
502	Screw connection -1- (30a), on relay plate
B111	Positive (+) connection -1- (30a), in interior wiring harness

ws	=	white
sw	=	black
ro	=	red
br	=	brown
gn	=	green
bl	=	blue
gr	=	grey
li = purple
ge = yellow
or = orange
rs = pink

Protected by copyright. Copyright by Volkswagen AG. Copying for private or commercial purposes, in part or in whole, is not permitted unless authorised. We accept any liability with respect to the correctness of information in this document.

satelettronica

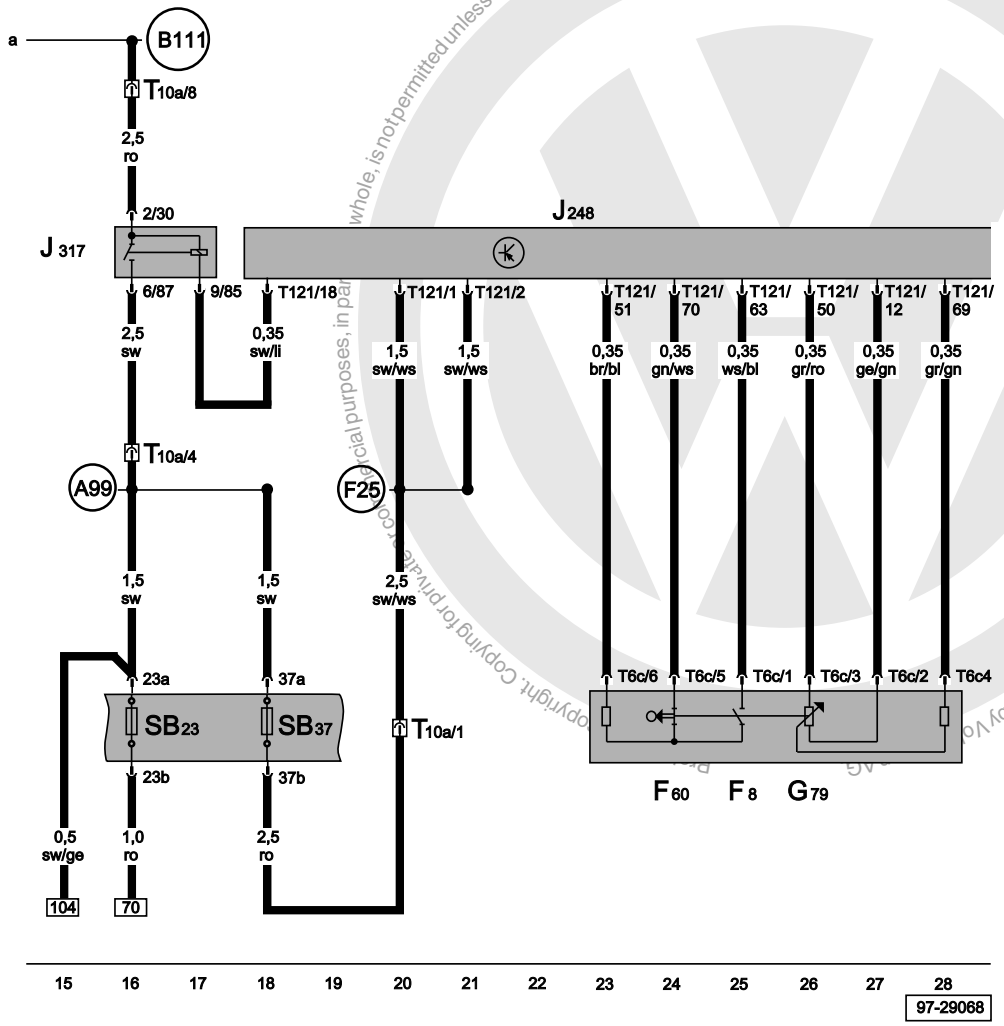

Diesel direct injection system control unit, voltage supply relay, kick-down switch, idling switch, accelerator pedal position sender

F8	Kick-down switch
F60	Idling switch
G79	Accelerator pedal position sender
J248	Diesel direct injection system control unit, in plenum chamber, centre
J317	Terminal 30 voltage supply relay, on relay carrier
SB23	Fuse -23- in fuse box
SB37	Fuse -37- in fuse box
T6c	6-pin connector, on left under dash panel
T10a	10-pin connector, green, connector point under relay carrier
T121	121-pin connector
A99	Connection -1- (87), in dash panel wiring harness
B111	Positive (+) connection -1- (30a), in interior wiring harness
F25	Connection (1), in diesel direct injection wiring harness

ws	=	white
sw	=	black
ro	=	red
br	=	brown
gn	=	green
bl	=	blue
gr	=	grey
li	=	purple
ge	=	yellow
or	=	orange
rs	=	pink

Copyright by Volkswagen AG. Volkswagen AG does not guarantee or accept any liability with respect to the correctness of information in this document. Copyright by Volkswagen AG. Copying for private or commercial purposes, in part or in whole, is not permitted unless authorised by Volkswagen AG.

satelettronica

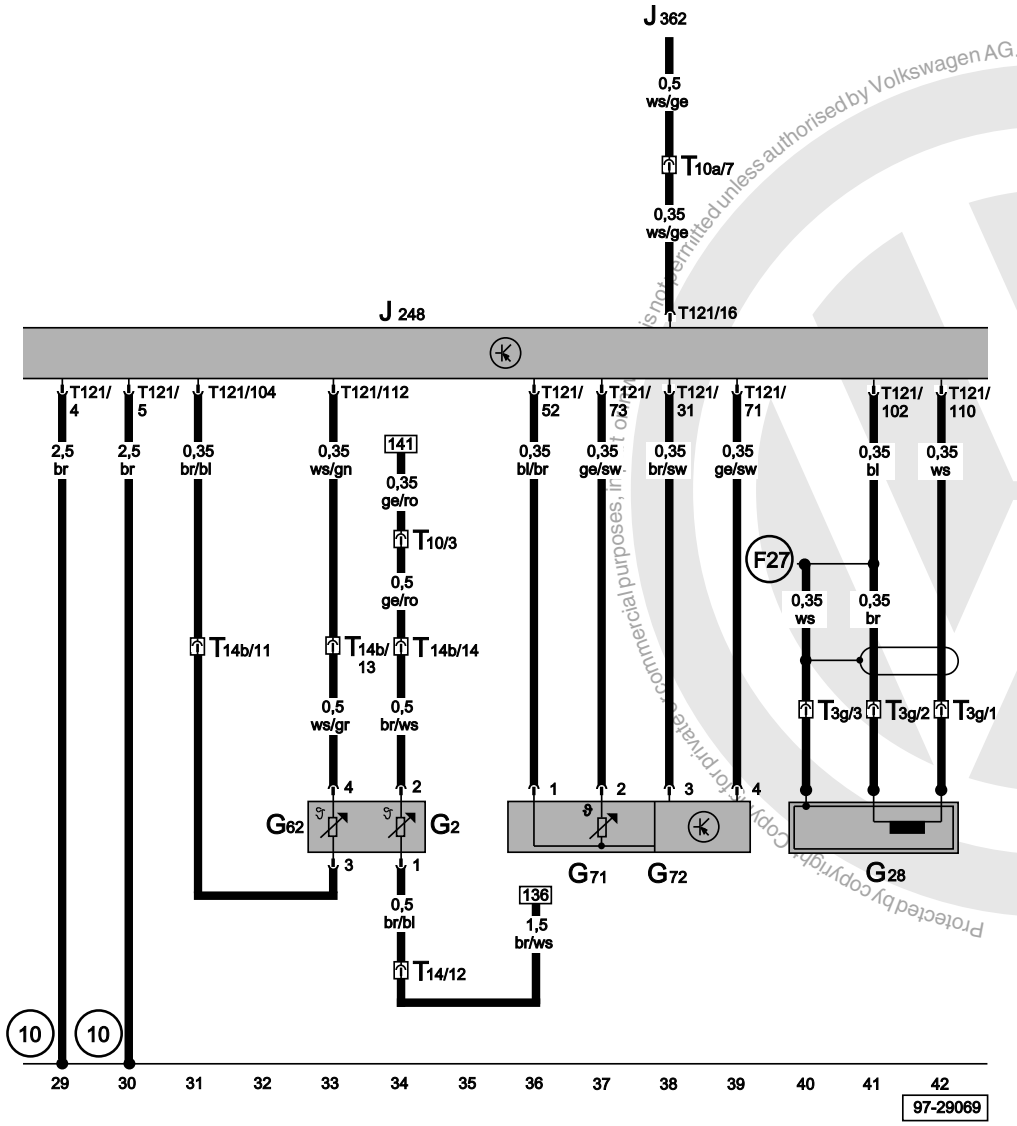

Diesel direct injection system control unit, coolant temperature sender, intake manifold pressure sender, intake manifold temperature sender, engine speed sender

G2	Coolant temperature sender
G28	Engine speed sender
G62	Coolant temperature sender
G71	Intake manifold pressure sender
G72	Intake manifold temperature sender
J248	Diesel direct injection system control unit, in plenum chamber, centre
J362	Immobilizer control unit, behind dash panel, left
T3g	3-pin connector, on engine front
T10	10-pin connector, white, connector point under relay carrier
T10a	10-pin connector, green, connector point under relay carrier
T14	14-pin connector, in cable channel left in engine compartment
T14b	14-pin connector, in engine compartment, left
T121	121-pin connector
10	Earth point, in plenum chamber
F27	Connection (screening), in diesel direct injection system wiring harness

ws	=	white
sw	=	black
ro	=	red
br	=	brown
gn	=	green
bl	=	blue
gr	=	grey
li	=	purple
ge	=	yellow
or	=	orange
rs	=	pink

Protected by copyright. Copyright by Volkswagen AG. Volkswagen AG does not guarantee or accept any liability with respect to the correctness of information in this document. Copyright by Volkswagen AG. Copying for private, commercial purposes, in part or in whole, is not permitted unless authorised by Volkswagen AG.
satelettronica

Diesel direct injection system control unit, valve for unit injector, Hall sender (for camshaft position)

G40	Hall sender (for camshaft position)
J248	Diesel direct injection system control unit, left in engine compartment
N240	Unit injector solenoid valve, No. 1 cyl.
N241	Unit injector solenoid valve, No. 2 cyl.
N242	Unit injector solenoid valve, No. 3 cyl.
T31	3-pin connector, on front of engine
T81	8-pin connector, left in engine compartment
T121	121-pin connector
D101	Connection -1-, in engine compartment wiring harness
F26	Connection -2-, in diesel direct injection system wiring harness

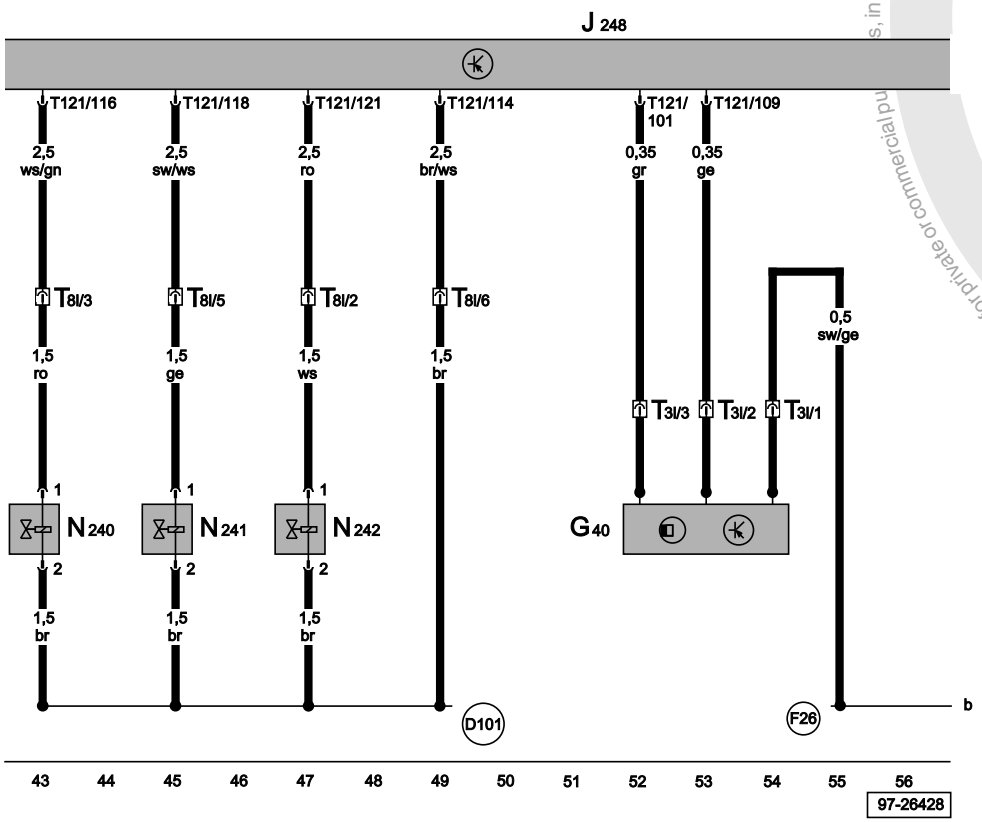

ws	=	white
sw	=	black
ro	=	red
br	=	brown
gn	=	green
bl	=	blue
gr	=	grey
li	=	purple
ge	=	yellow
or	=	orange
rs	=	pink

Protected by copyright. Copying for private or commercial purposes, in part or in whole, is not permitted unless authorised by Volkswagen AG. Volkswagen AG does not guarantee or accept any liability with respect to the correctness of information in this document. Copyright by Volkswagen AG.
satelettronica

Diesel direct injection system control unit, air mass meter, change-over valve for intake manifold flap, exhaust gas recirculation valve, charge pressure control solenoid valve

G70	Air mass meter
J248	Diesel direct injection system control unit, left in engine compartment
N18	Exhaust gas recirculation valve
N75	Charge pressure control solenoid valve
N239	Intake manifold flap change-over valve
T5	5-pin connector
T10a	10-pin connector, green, coupling station below relay carrier
T10c	10-pin connector, blue, coupling station under relay carrier
T121	121-pin connector
F26	Connection -2-, in diesel direct injection system wiring harness

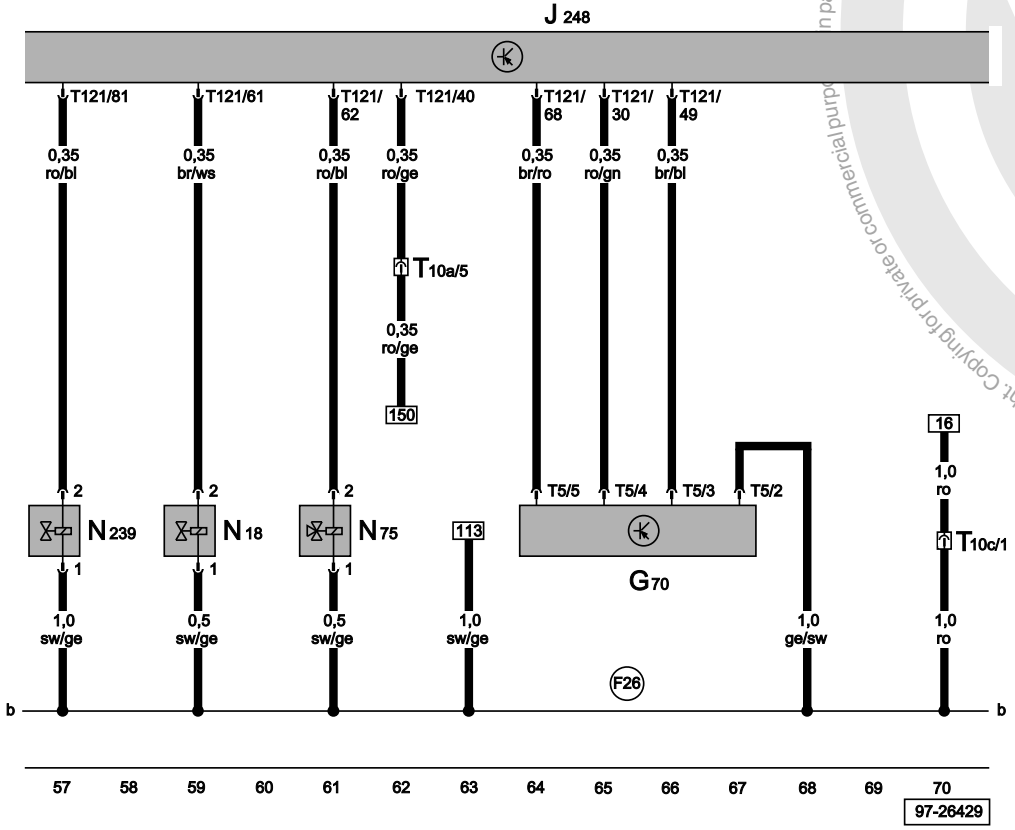

ws	=	white
sw	=	black
ro	=	red
br	=	brown
gn	=	green
bl	=	blue
gr	=	grey
li	=	purple
ge	=	yellow
or	=	orange
rs	=	pink

Protected by copyright. Copying for private or commercial purposes, in part or in whole, is not permitted unless authorised by Volkswagen AG. Volkswagen AG does not warrant the correctness of information in this document. Copyright by Volkswagen AG. No liability will be accepted.

satelettronica

Diesel direct injection system control unit, coolant heater element, high and low heat output relay

J248	Diesel direct injection system control unit, in engine compartment, left
J359	Low heat output relay, on relay carrier
J360	High heat output relay, on relay carrier
Q7	Coolant heating elements
T121	121-pin connector
A1	Positive (+) connection (30a), in dash panel wiring harness
D98	Connection (glow plugs), in engine compartment wiring harness
F26	Connection -2-, in diesel direct injection system wiring harness

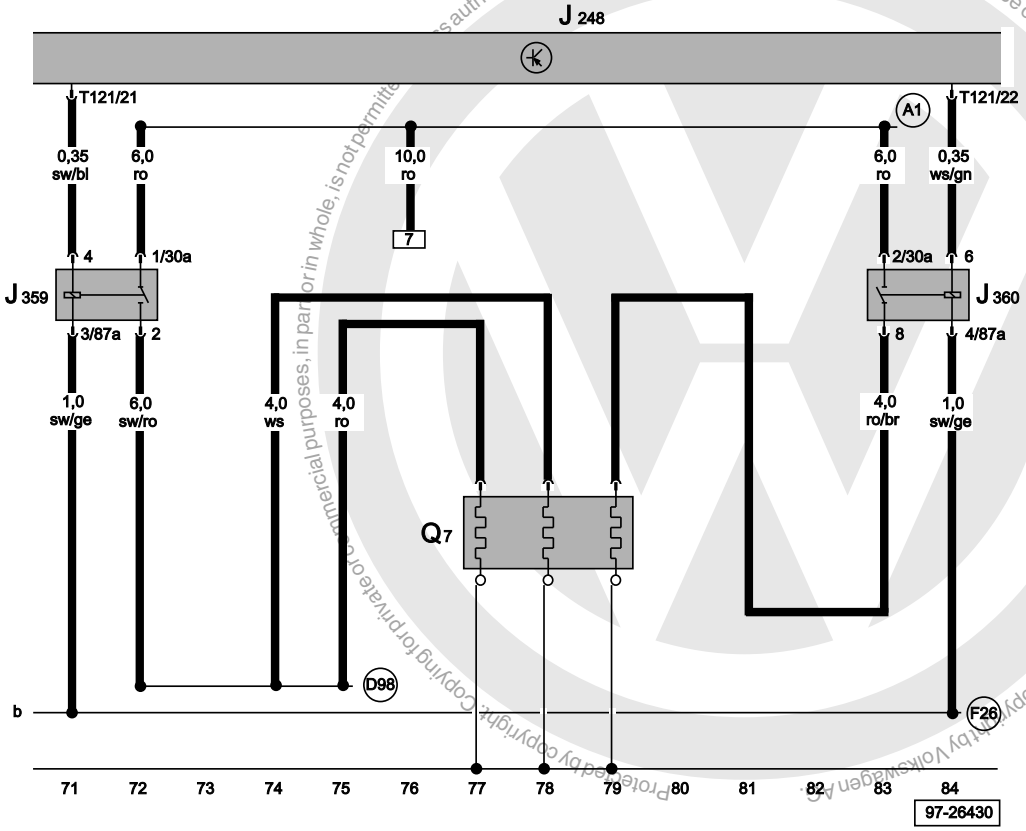

ws	=	white
sw	=	black
ro	=	red
br	=	brown
gn	=	green
bl	=	blue
gr	=	grey
li	=	purple
ge	=	yellow
or	=	orange
rs	=	pink

Protected by copyright. Copying for private or commercial purposes, in part or in whole, is not permitted unless authorised by Volkswagen AG. Volkswagen AG does not guarantee or accept any liability with respect to the correctness of information in this document. Copyright by Volkswagen AG.

satelettronica

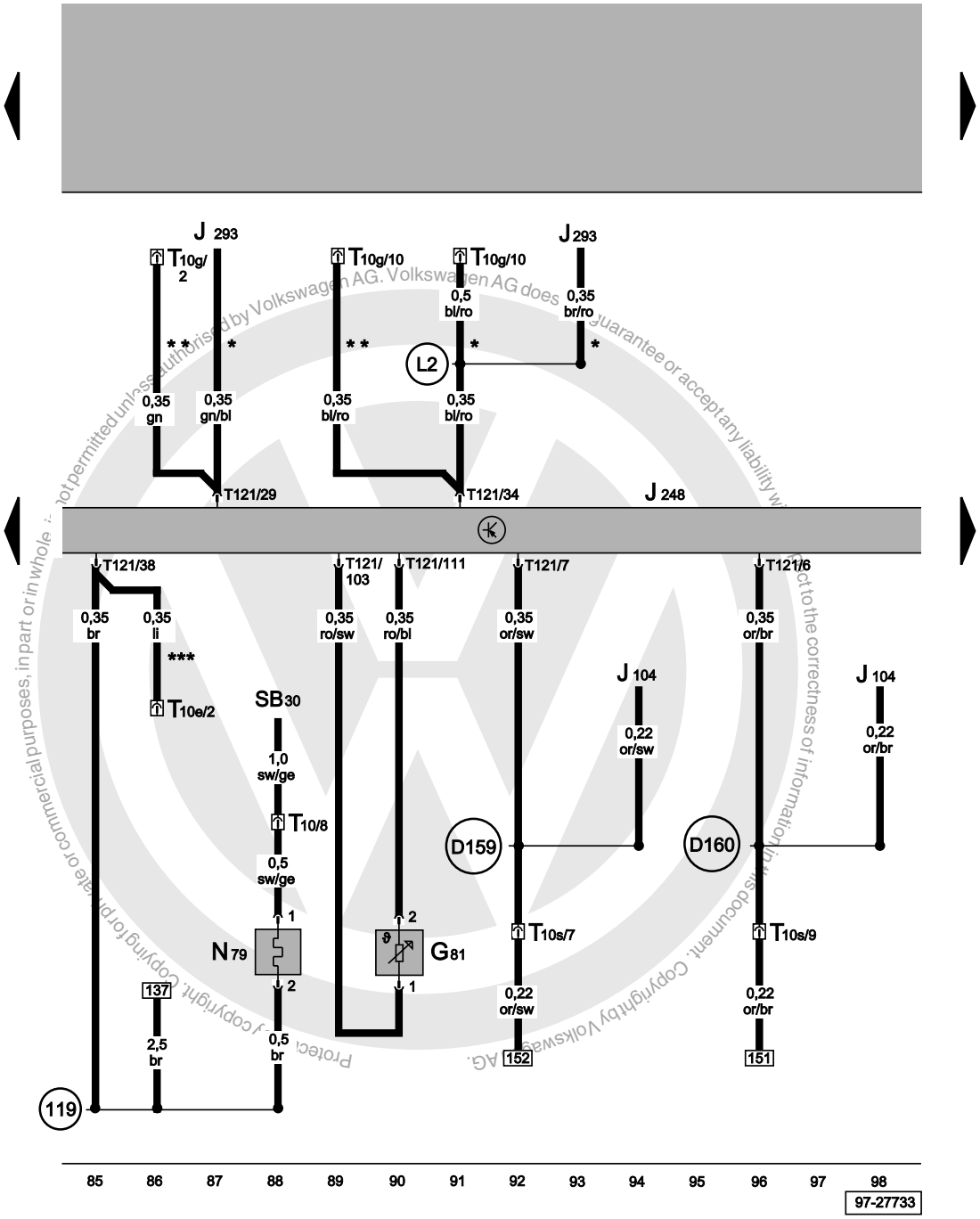

Diesel direct injection system control unit, fuel temperature sender, heater element (crankcase breather)

G81	Fuel temperature sender
J104	ABS/ABS with EDL control unit
J248	Diesel direct injection system control unit, in plenum chamber, centre
J293	Radiator fan control unit
N79	Heater element (crankcase breather)
SB30	Fuse -30- in relay plate fuse box
T10	10-pin connector, white, connector point under relay carrier
T10e	10-pin connector, light pink, connector point under relay carrier
T10g	10-pin connector, brown, connector point under relay carrier
T10s	10-pin connector, light green, connector point under relay carrier
T121	121-pin connector
119	Earth connection -1-, in headlight wiring harness
D159	Connection (high bus), in dash panel wiring harness
D160	Connection (low bus), in dash panel wiring harness
L2	Connection, in air conditioner wiring harness
*	Only models with manual control air conditioner
**	Only models with Climatronic
***	Only models with electronic air type additional heater

ws	=	white
sw	=	black
ro	=	red
br	=	brown
gn	=	green
bl	=	blue
gr	=	grey
li	=	purple
ge	=	yellow
or	=	orange
rs	=	pink

satelettronica

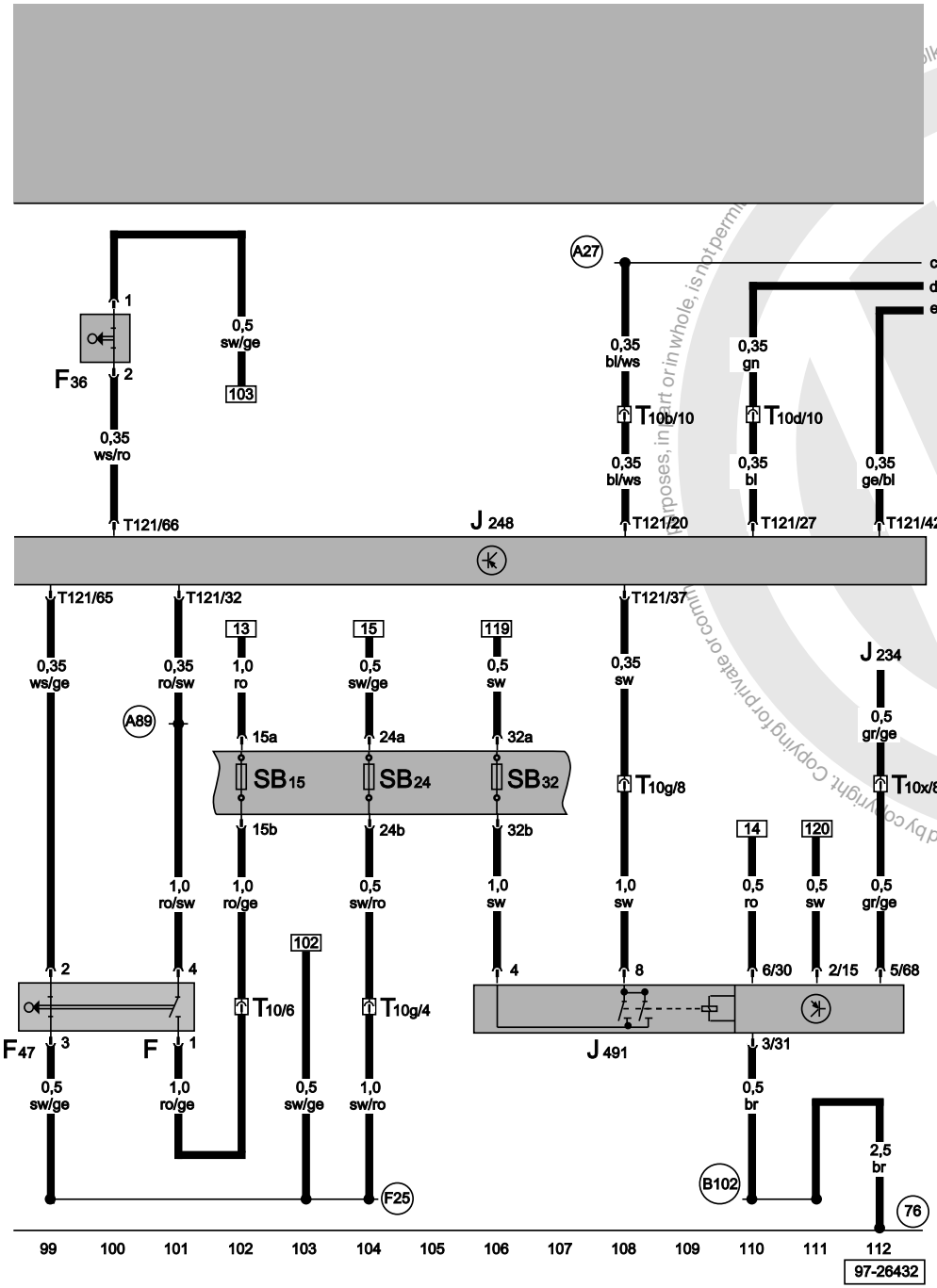

Diesel direct injection system control unit, brake pedal switch for diesel direct injection system, brake light switch, clutch pedal switch

F	Brake light switch
F36	Clutch pedal switch
F47	Cruise cont. sys. brake pedal switch (diesel direct inj. system)
J234	Airbag control unit
J248	Diesel direct injection system control unit, left in engine compartment
J491	Control unit for fuel shut-off (Crash)
SB15	Fuse -15- on fuse holder
SB24	Fuse -24- on fuse holder
SB32	Fuse -32- on fuse holder
T10	10-pin connector, white, coupling station below relay carrier
T10b	10-pin connector, black, coupling station below relay carrier
T10d	10-pin connector, red, coupling station below relay carrier
T10g	10-pin connector, brown, coupling station below relay carrier
T10x	10-pin connector, yellow, coupling station below relay carrier
T121	121-pin connector
76	Earth point, near selector mechanism
A27	Connection (speed signal), in dash panel wiring harness
A89	Connection -2- (54), in dash panel wiring harness
B102	Earth connection, in front left interior wiring harness
F25	Connection -1-, in diesel direct injection system wiring harness

ws	=	white
sw	=	black
ro	=	red
br	=	brown
gn	=	green
bl	=	blue
gr	=	grey
li	=	purple
ge	=	yellow
or	=	orange
rs	=	pink

Volkswagen AG. Volkswagen AG does not guarantee or accept any liability with respect to the correctness of information in this document. Copyright by Volkswagen AG.
Protected by copyright. Copying for private or commercial purposes, in part or in whole, is not permitted unless authorised by Volkswagen AG.
satelettronica

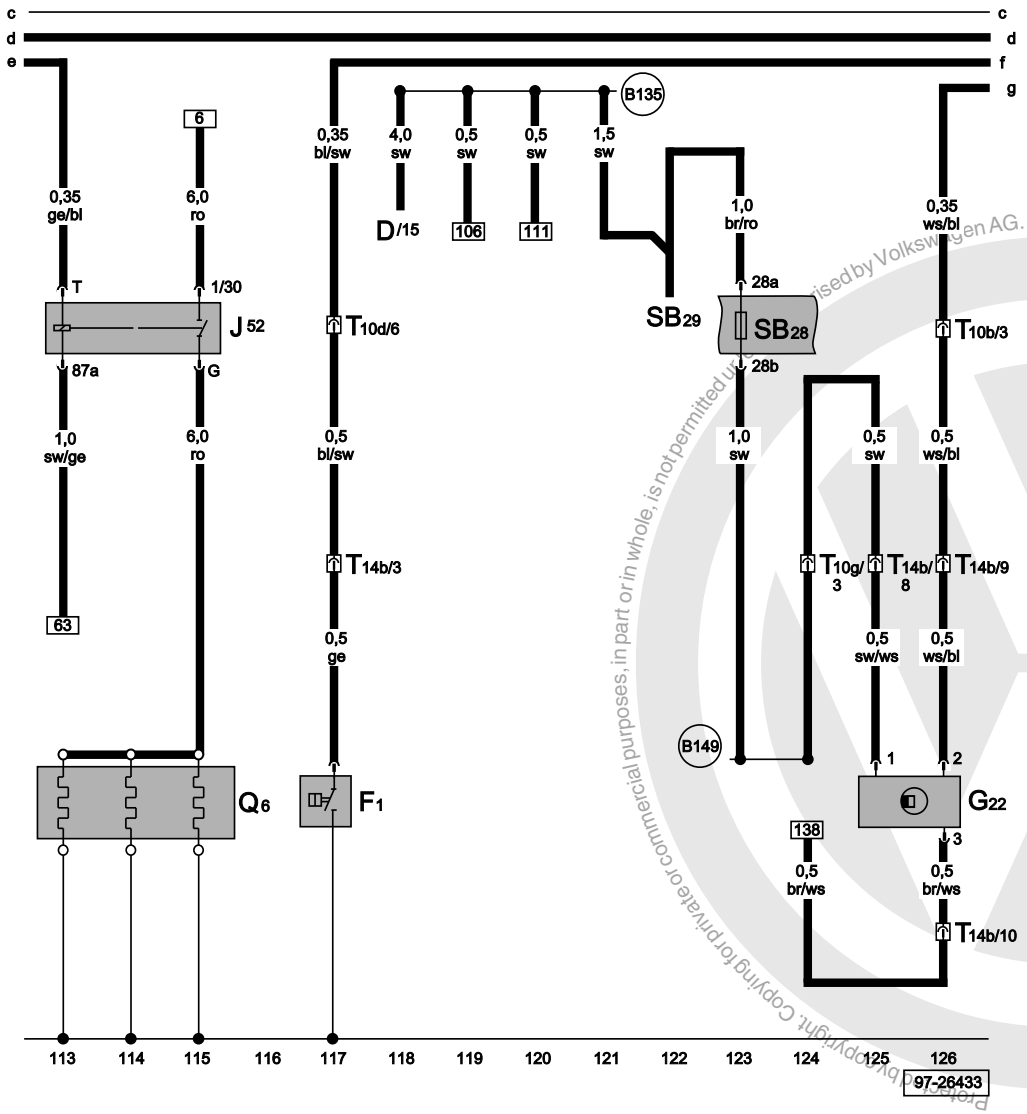

Glow plug relay, speedometer sender, oil pressure switch, engine glow plugs

D	Ignition/starter switch
F1	Oil pressure switch
G22	Speedometer sender (Hall sender on gearbox)
J52	Glow plug relay, on relay carrier
Q6	Glow plugs - (engine)
SB28	Fuse -28- on fuse holder
SB29	Fuse -29- on fuse holder
T10b	10-pin connector, black, coupling station below relay carrier
T10d	10-pin connector, red, coupling station below relay carrier
T10g	10-pin connector, brown, coupling station below relay carrier
T14b	14-pin connector, left in engine compartment
B135	Connection -1- (15a), in interior wiring harness
B149	Positive connection -2- (15a), in wiring harness

ws	=	white
sw	=	black
ro	=	red
br	=	brown
gn	=	green
bl	=	blue
gr	=	grey
li	=	purple
ge	=	yellow
or	=	orange
rs	=	pink

Protected by copyright. Copying for private or commercial purposes, in part or in whole, is not permitted unless authorised by Volkswagen AG. Volkswagen AG does not guarantee or accept any liability with respect to the correctness of information in this document. Copyright by Volkswagen AG.

satelettronica

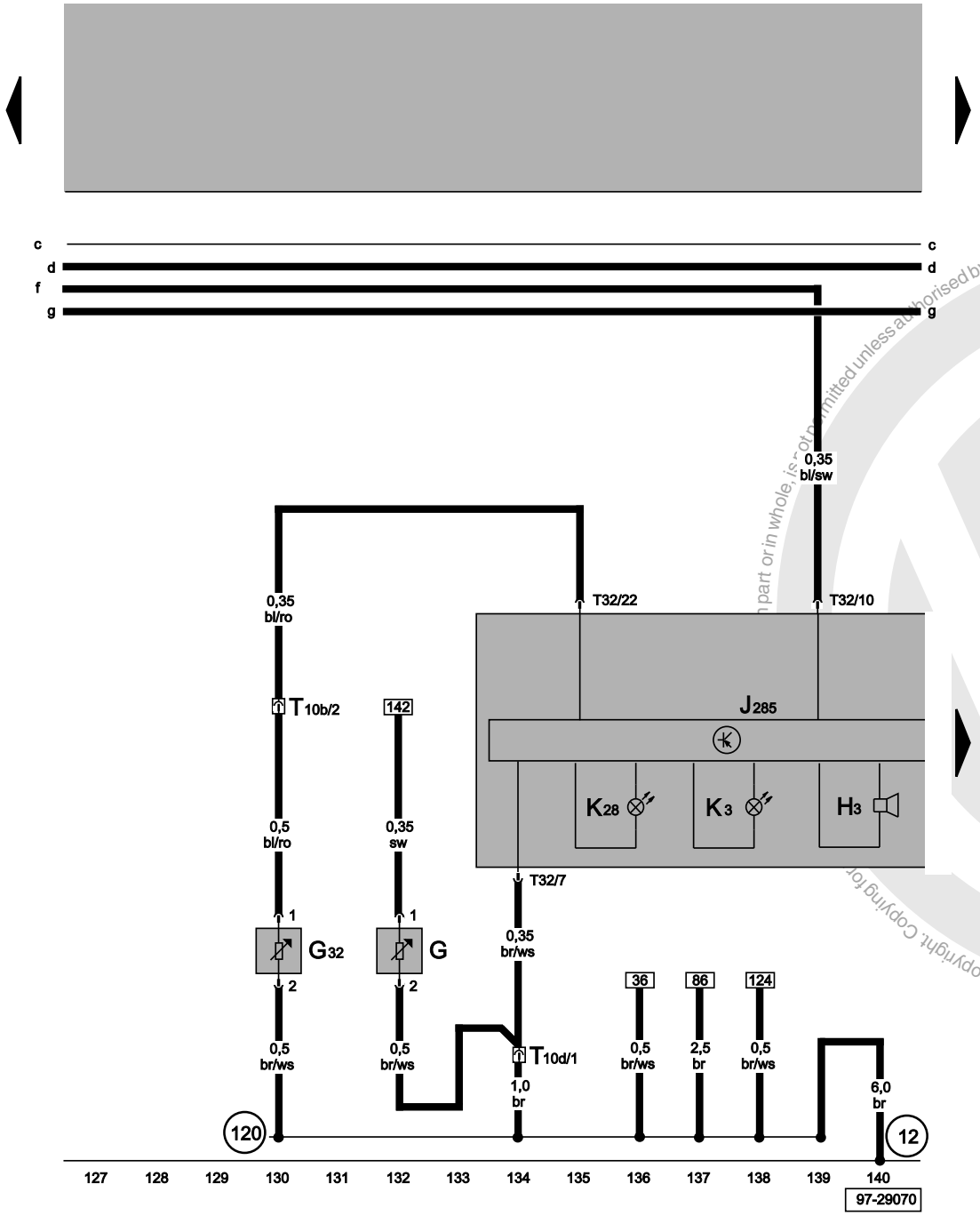

Dash panel insert, fuel gauge sender, coolant temperature/ coolant shortage warning lamp, optical and acoustical oil pressure warning

G	Fuel gauge sender
G32	Coolant shortage indicator sender
H3	Warning buzzer
J285	Control unit with display in dash panel insert
K3	Oil pressure warning lamp
K28	Coolant temperature/coolant shortage warning lamp
T10b	10-pin connector, black, connector point under relay carrier
T10d	10-pin connector, red, connector point under relay carrier
T32	32-pin connector, blue, on dash panel insert
12	Earth point, in engine compartment, left
120	Earth connection -2-, in headlight wiring harness

ws	=	white
sw	=	black
ro	=	red
br	=	brown
gn	=	green
bl	=	blue
gr	=	grey
li	=	purple
ge	=	yellow
or	=	orange
rs	=	pink

Protected by copyright. Copying for part or in whole, is not permitted unless authorised by Volkswagen AG. Volkswagen AG does not guarantee or accept any liability with respect to the correctness of information in this document. Copyright by Volkswagen AG.
satelettronica

Dash panel insert, coolant temperature gauge, fuel gauge, rev. counter, speedometer, alternator warning lamp, self-diagnosis connection

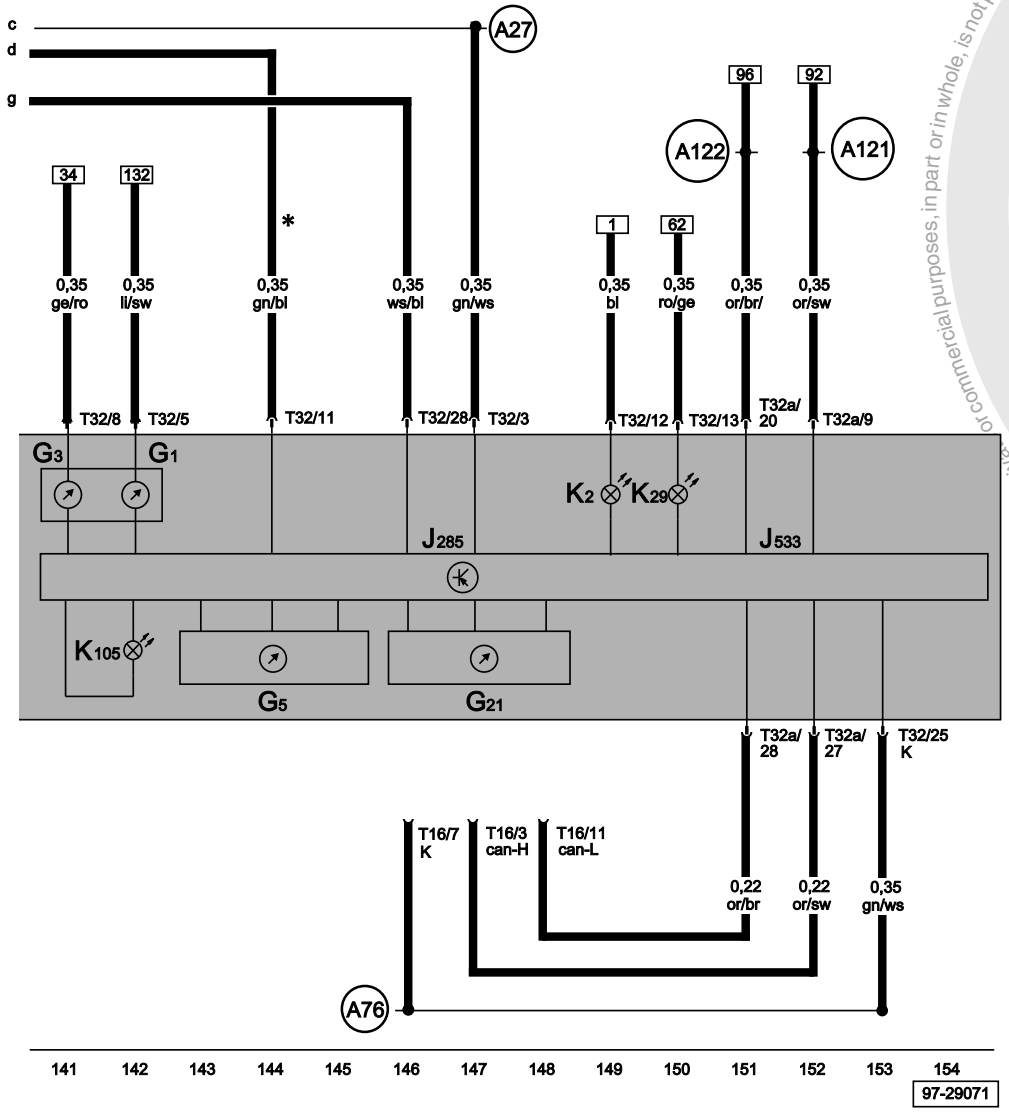

G1	Fuel gauge
G3	Coolant temperature gauge
G5	Rev. counter
G21	Speedometer
J285	Control unit with display in dash panel insert
J533	Data bus diagnostic interface, in dash panel insert
K2	Alternator warning lamp
K29	Glow period warning lamp
K105	Reserve fuel warning lamp
T16	16-pin connector, self-diagnosis connection
T32	32-pin connector, blue, on dash panel insert
T32a	32-pin connector, green, on dash panel insert
(A27)	Connection (speed signal), in dash panel wiring harness
(A76)	Connection (diagnosis wire K), in dash panel wiring harness
(A121)	Connection (high bus), in dash panel wiring harness
(A122)	Connection (low bus), in dash panel wiring harness
*	Engine speed signal from engine control unit

ws	=	white
sw	=	black
ro	=	red
br	=	brown
gn	=	green
bl	=	blue
gr	=	grey
li	=	purple
ge	=	yellow
or	=	orange
rs	=	pink

Protected by copyright. Copying for private or commercial purposes, in part or in whole, is not permitted unless authorised by Volkswagen AG. Volkswagen AG does not guarantee or accept any liability with respect to the correctness of information in this document. Copyright by Volkswagen AG.

satelettronica

⇒ 1.4 l/55 kW - 4CV, engine codes AHW
⇒ 1.4 l/74 kW - 4CV, engine codes AFK
From October 1999

For alternatives to relay and fuse positions as well as multi-pin connector wiring - see "Fitting locations" section.

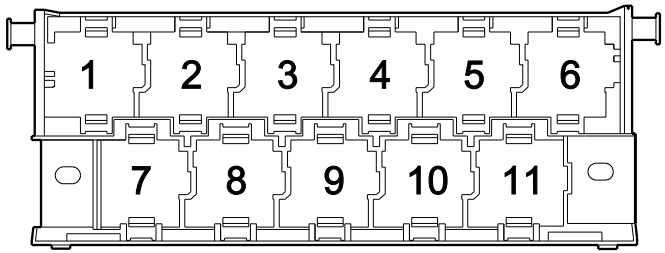

97-22850

Fuse colours

30 A - green
25 A - white
20 A - yellow
15 A - blue
10 A - red
7.5 A - brown
5 A - beige
3 A - purple

Protected by copyright. Copying for private or commercial purposes, in part or in whole, is not permitted unless authorised by Volkswagen AG. Volkswagen AG does not guarantee or accept any liability with respect to the correctness of information in this document. Copyright by Volkswagen AG.
satelettronica

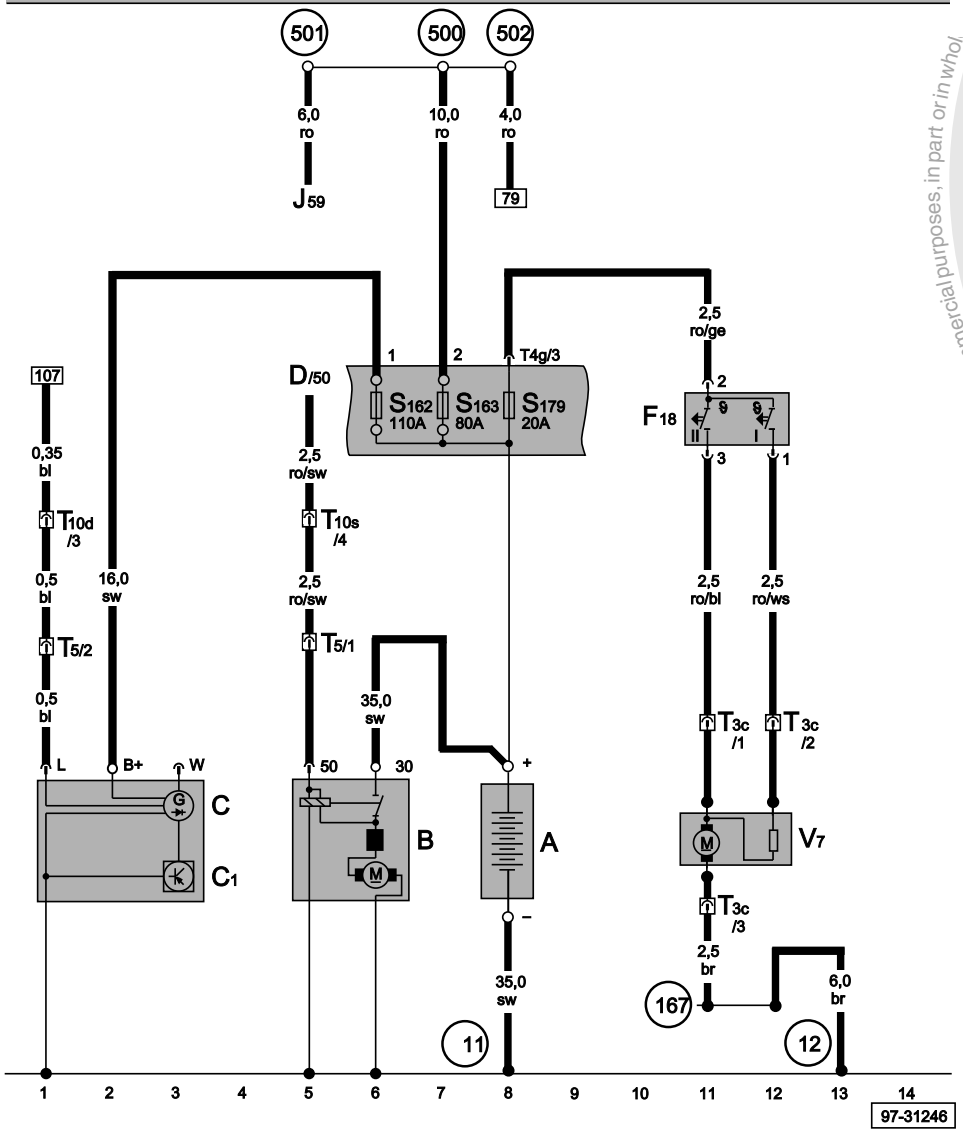

Battery, alternator, voltage regulator, starter, radiator fan thermo-switch, radiator fan

A	Battery
B	Starter
C	Alternator
C1	Voltage regulator
D	Ignition/starter switch
F18	Radiator fan thermo-switch
J59	X contact relief relay
S162	Fuse -1- (30), in fuse box/battery
S163	Fuse -2- (30), in fuse box/battery
S179	Fuse -7- (30), in fuse box/battery
T3c	3-pin connector
T4g	4-pin connector, black
T5	5-pin connector
T10d	10-pin connector, red, connector point under relay carrier
T10s	10-pin connector, light green, connector point under relay carrier
V7	Radiator fan
1	Earth strap, battery - body
12	Earth point, in engine compartment, left
167	Earth connection -4-, in engine compartment wiring harness
500	Screw connection -1- (30), on relay plate
501	Screw connection -2- (30), on relay plate
502	Screw connection -3- (30), on relay plate

ws	=	white
sw	=	black
ro	=	red
br	=	brown
gn	=	green
bl	=	blue
gr	=	grey
li	=	purple
ge	=	yellow
or	=	orange
rs	=	pink

Protected by copyright. Copying for private or commercial purposes, in part or in whole, is not permitted unless authorised by Volkswagen AG. Volkswagen AG does not guarantee or accept any liability with respect to the correctness of information in this document. Copyright by Volkswagen AG.

satelettronica

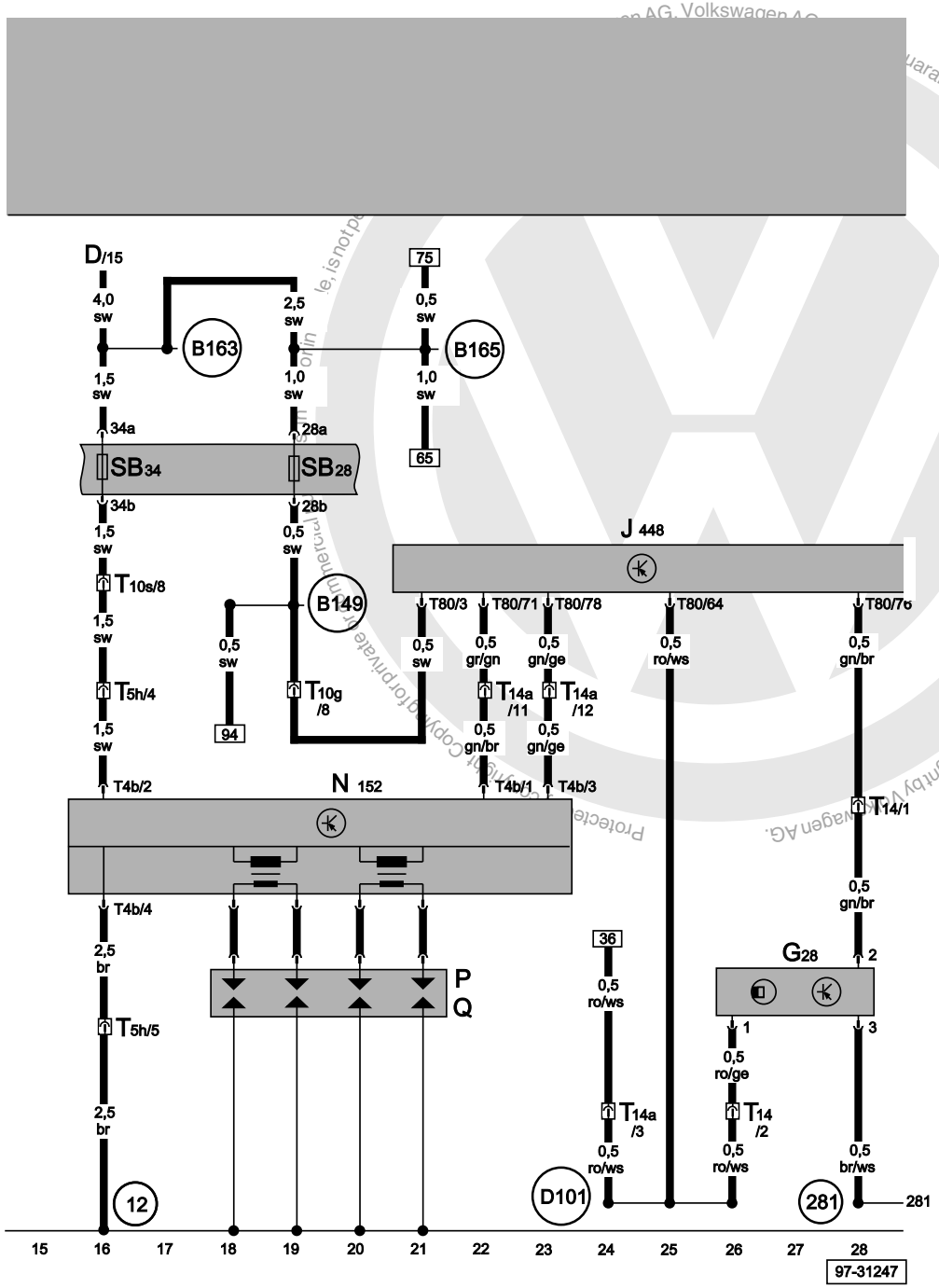

4CV control unit (injection system), engine speed sender, spark plug connector, spark plugs, ignition transformer

D	Ignition/starter switch
G28	Engine speed sender
J448	4CV control unit (injection system), in plenum chamber, centre
N152	Ignition transformer
P	Spark plug connector
Q	Spark plugs
SB28	Fuse -28- in fuse box
SB34	Fuse -34- in fuse box
T4b	4-pin connector, black
T5h	5-pin connector, black, on cylinder head, left
T10g	10-pin connector, brown, connector point under relay carrier
T10s	10-pin connector, light green, connector point under relay carrier
T14	14-pin connector, black, on cylinder head, left
T14a	14-pin connector, brown, on cylinder head, left
T80	80-pin connector
12	Earth point, in engine compartment, left
281	Earth connection -1-, in engine prewiring wiring harness
B163	Positive (+) connection -1- (15), in interior wiring harness
B165	Positive (+) connection -2- (15), in interior wiring harness
B149	Positive (+) connection -2- (15a), in interior wiring harness
D101	Connection -1-, in engine wiring harness

ws	=	white
sw	=	black
ro	=	red
br	=	brown
gn	=	green
bl	=	blue
gr	=	grey
li	=	purple
ge	=	yellow
or	=	orange
rs	=	pink

satelettronica

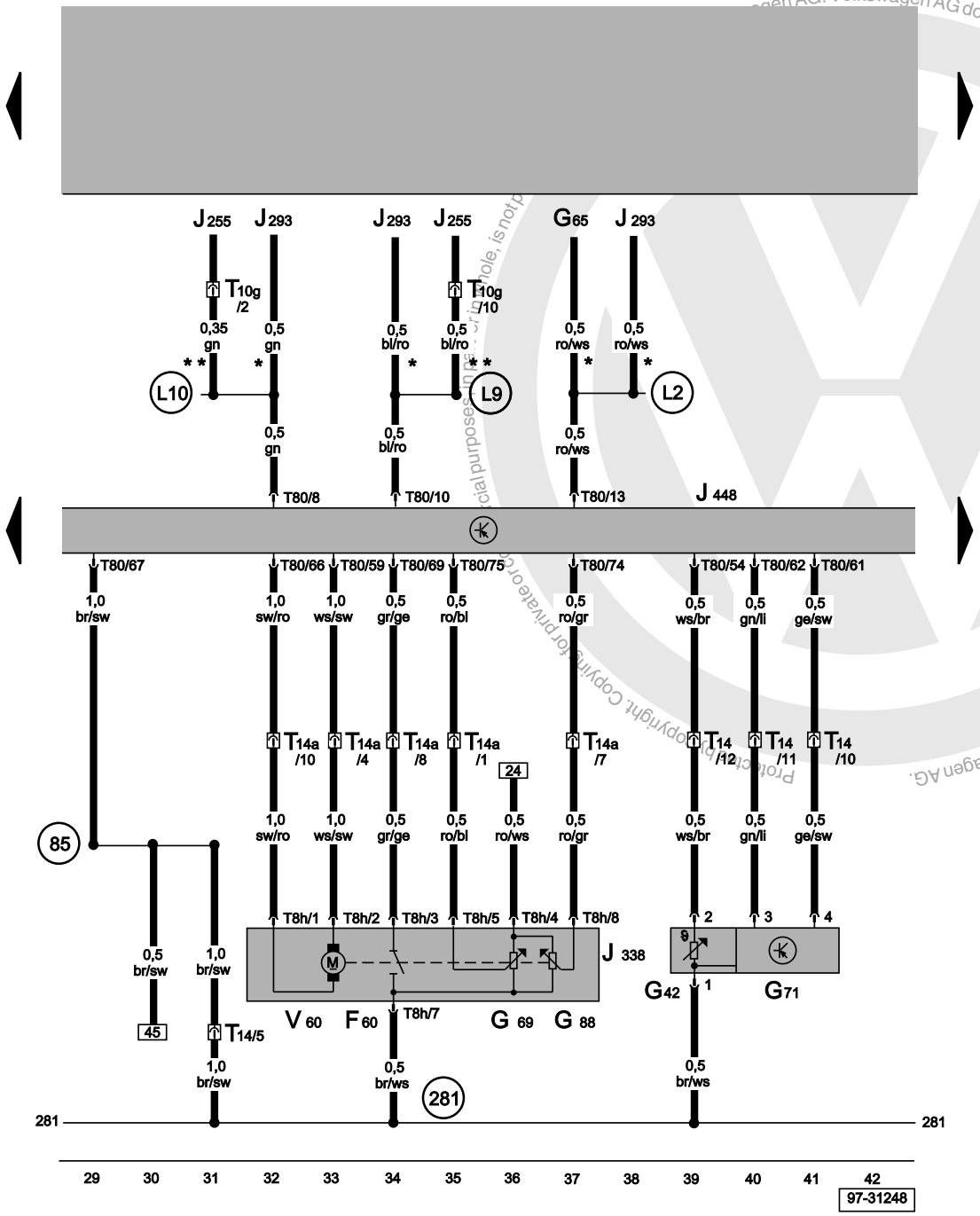

4CV control unit (injection system), throttle valve control unit, intake manifold pressure sender, intake manifold temperature sender

F60	Idling switch
G42	Intake air temperature sender
G65	High pressure sender
G69	Throttle valve potentiometer
G71	Intake manifold pressure sender
G88	Throttle valve positioner potentiometer
J255	Climatronic control unit
J293	Radiator fan control unit
J338	Throttle valve control unit
J448	4CV control unit (injection system)
T8h	8-pin connector, black
T10g	10-pin connector, brown, connector point under relay carrier
T14	14-pin connector, black, on cylinder head, left
T14a	14-pin connector, brown, on cylinder head, left
T80	80-pin connector
V60	Throttle valve positioner
85	Earth connection -1-, in engine compartment wiring harness
281	Earth connection -1-, in engine prewiring wiring harness
L2	Connection, in air conditioner wiring harness
L9	Connection -1-, in air conditioner wiring harness
L10	Connection -2-, in air conditioner wiring harness
*	Only models with manual control air conditioner
**	Only models with Climatronic

ws	=	white
sw	=	black
ro	=	red
br	=	brown
gn	=	green
bl	=	blue
gr	=	grey
li	=	purple
ge	=	yellow
or	=	orange
rs	=	pink

Protected by copyright. Copying for private or commercial purposes, in part or in whole, is not permitted unless authorised by Volkswagen AG. Volkswagen AG does not guarantee or accept any liability with respect to the correctness of this document. Copyright by Volkswagen AG.
satelettronica

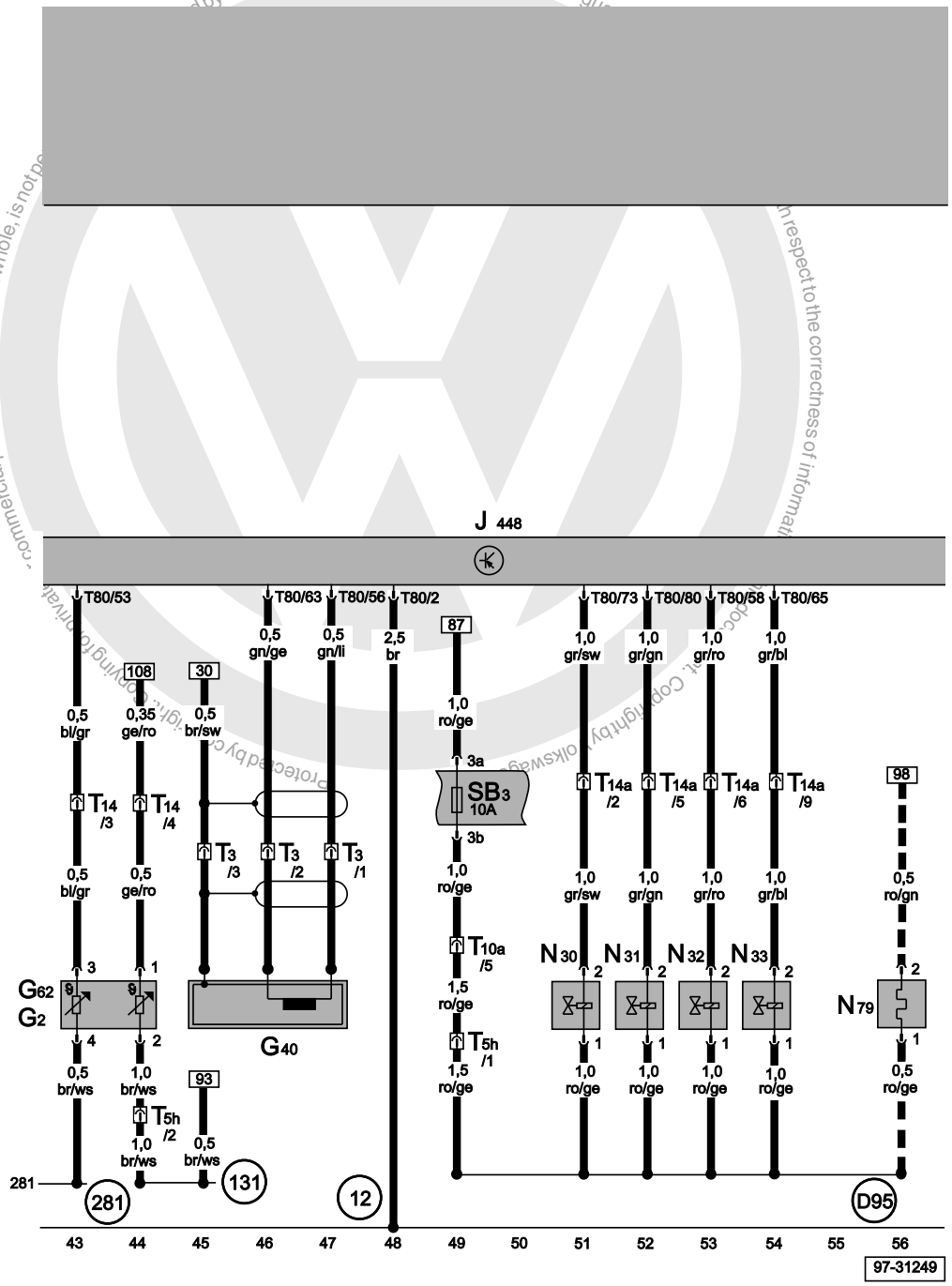

4CV control unit (injection system), hall sender, coolant temperature sender, fuse, injectors, heater element (crankcase breather)

G2	Coolant temperature sender
G40	Hall sender
G62	Coolant temperature sender
J293	Radiator fan control unit
J448	4CV control unit (injection system)
N30	Injector, cylinder 1
N31	Injector, cylinder 2
N32	Injector, cylinder 3
N33	Injector, cylinder 4
N79	Heater element (crankcase breather)
SB3	Fuse -3- in fuse box
T3	3-pin connector, on cylinder head, left
T5h	5-pin connector, on cylinder head, left
T10a	10-pin connector, green, connector point under relay carrier
T14	14-pin connector, black, on cylinder head, left
T14a	14-pin connector, brown, on cylinder head, left
T80	80-pin connector
12	Earth point, in engine compartment, left
131	Earth connection -2-, in engine compartment wiring harness
220	Earth connection (sender earth), in engine wiring harness
281	Earth connection -1-, in engine prewiring wiring harness
D95	Connection (injectors), in engine compartment wiring harness
*	Only models with air conditioner
---	From December 2000

ws	=	white
sw	=	black
ro	=	red
br	=	brown
gn	=	green
bl	=	blue
gr	=	grey
li	=	purple
ge	=	yellow
or	=	orange
rs	=	pink

satelettronica

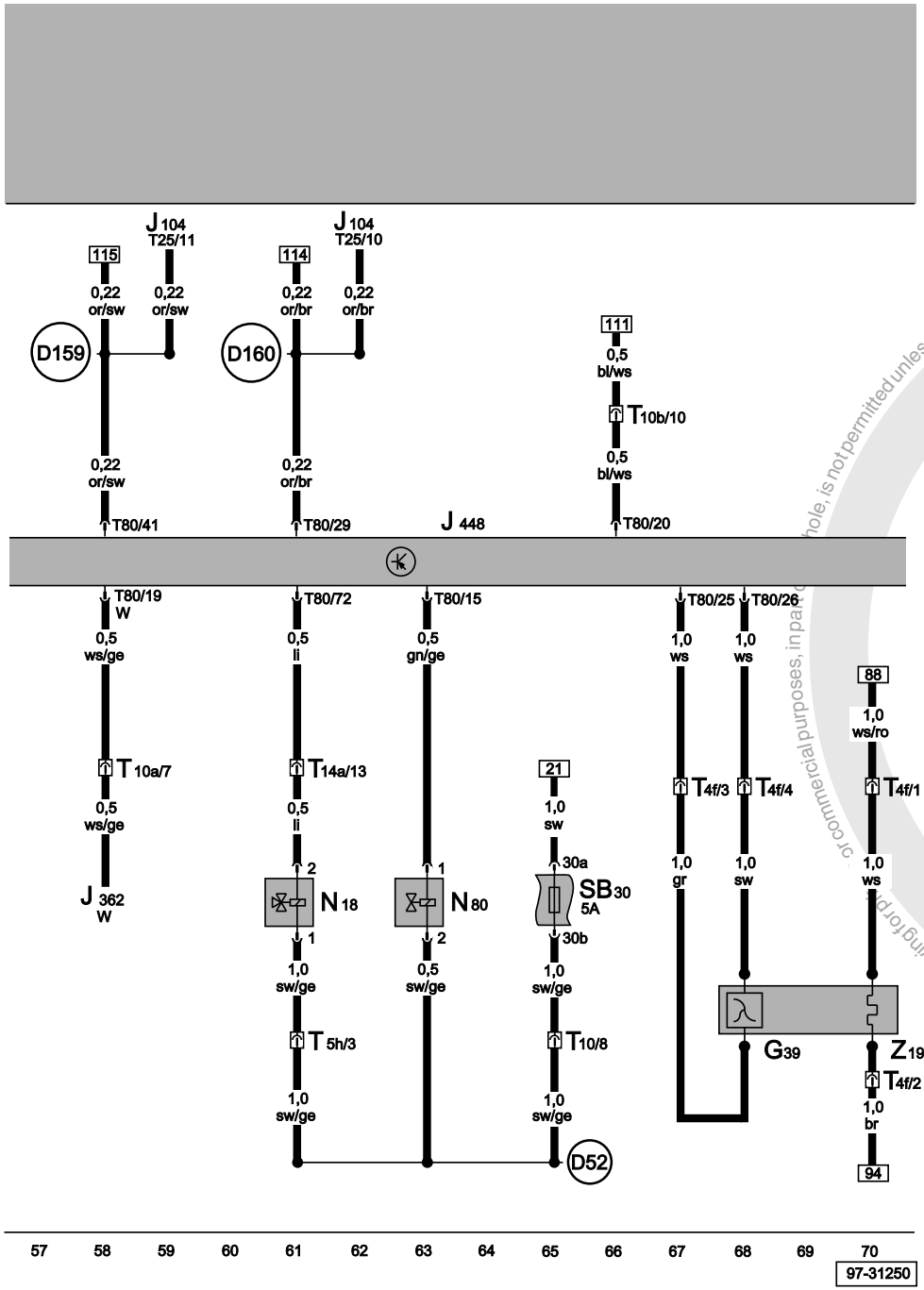

4CV control unit (injection system), lambda probe, activated charcoal filter system solenoid valve, exhaust gas recirculation frequency valve, immobilizer control unit

G39	Lambda probe
J104	ABS with EDL control unit
J362	Immobilizer control unit
J448	4CV control unit (injection system)
N18	Exhaust gas recirculation valve
N80	Activated charcoal filter system solenoid valve 1
SB30	Fuse -30- in fuse box
T4f	4-pin connector, black
T5h	5-pin connector, black, on cylinder head, left
T10	10-pin connector, white, connector point under relay carrier
T10a	10-pin connector, green, connector point under relay carrier
T10b	10-pin connector, black, connector point under relay carrier
T14a	14-pin connector, brown, on cylinder head, left
T25	25-pin connector
T80	80-pin connector
Z19	Lambda probe heater
D52	Positive (+) connection (15a), in engine compartment wiring harness
D159	Connection (high bus), in engine compartment wiring harness
D160	Connection (low bus), in engine compartment wiring harness

ws	=	white
sw	=	black
ro	=	red
br	=	brown
gn	=	green
bl	=	blue
gr	=	grey
li	=	purple
ge	=	yellow
or	=	orange
rs	=	pink

Protected by copyright. Copying for commercial purposes, in part or in whole, is not permitted unless authorised by Volkswagen AG. Volkswagen AG does not guarantee or accept any liability with respect to the correctness of information in this document. Copyright by Volkswagen AG.
satelettronica

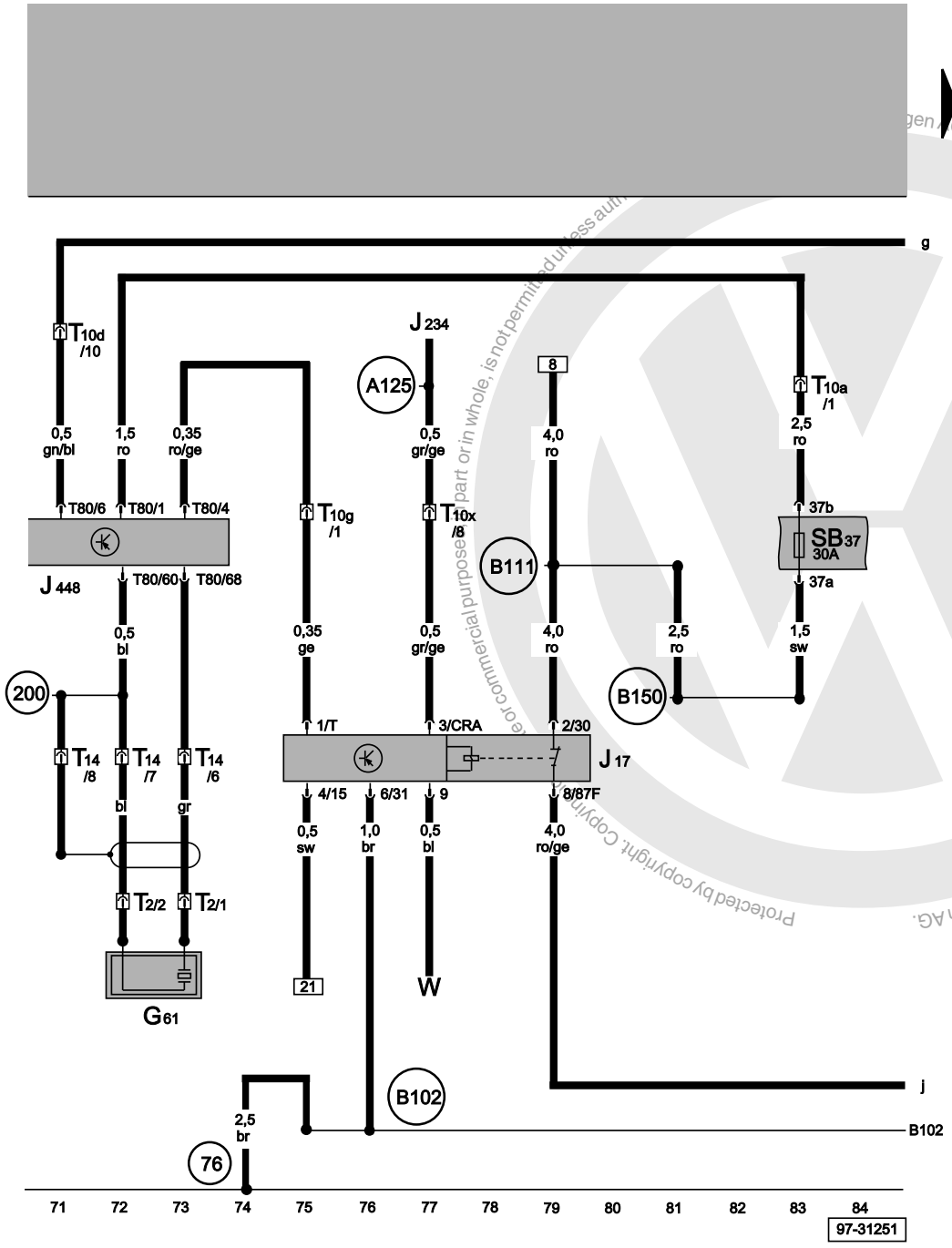

4CV control unit (injection system), knock sensor, fuel pump relay, fuse

G61	Knock sensor I
J17	Fuel pump relay
J234	Airbag control unit
J448	4CV control unit (injection system)
SB37	Fuse -37- in fuse box
T2	2-pin connector, black
T10a	10-pin connector, green, connector point under relay carrier
T10d	10-pin connector, red, connector point under relay carrier
T10g	10-pin connector, brown, connector point under relay carrier
T10x	10-pin connector, yellow, connector point under relay carrier
T14	14-pin connector, black, on cylinder head, left
T80	80-pin connector
W	Interior light, front
76	Earth point, near selector mechanism
200	Earth connection (screening), in engine compartment wiring harness
A125	Connection (crash signal), in dash panel wiring harness
B102	Earth connection, in front left interior wiring harness
B111	Positive (+) connection -1- (30a), in interior wiring harness
B150	Positive (+) connection -2- (30a), in interior wiring harness

ws	=	white
sw	=	black
ro	=	red
br	=	brown
gn	=	green
bl	=	blue
gr	=	grey
li	=	purple
ge	=	yellow
or	=	orange
rs	=	pink

Protected by copyright. Copyright by Volkswagen AG.
Volkswagen AG does not guarantee or accept any liability with respect to the correctness of information in this document. Copyright by Volkswagen AG.
satelettronica

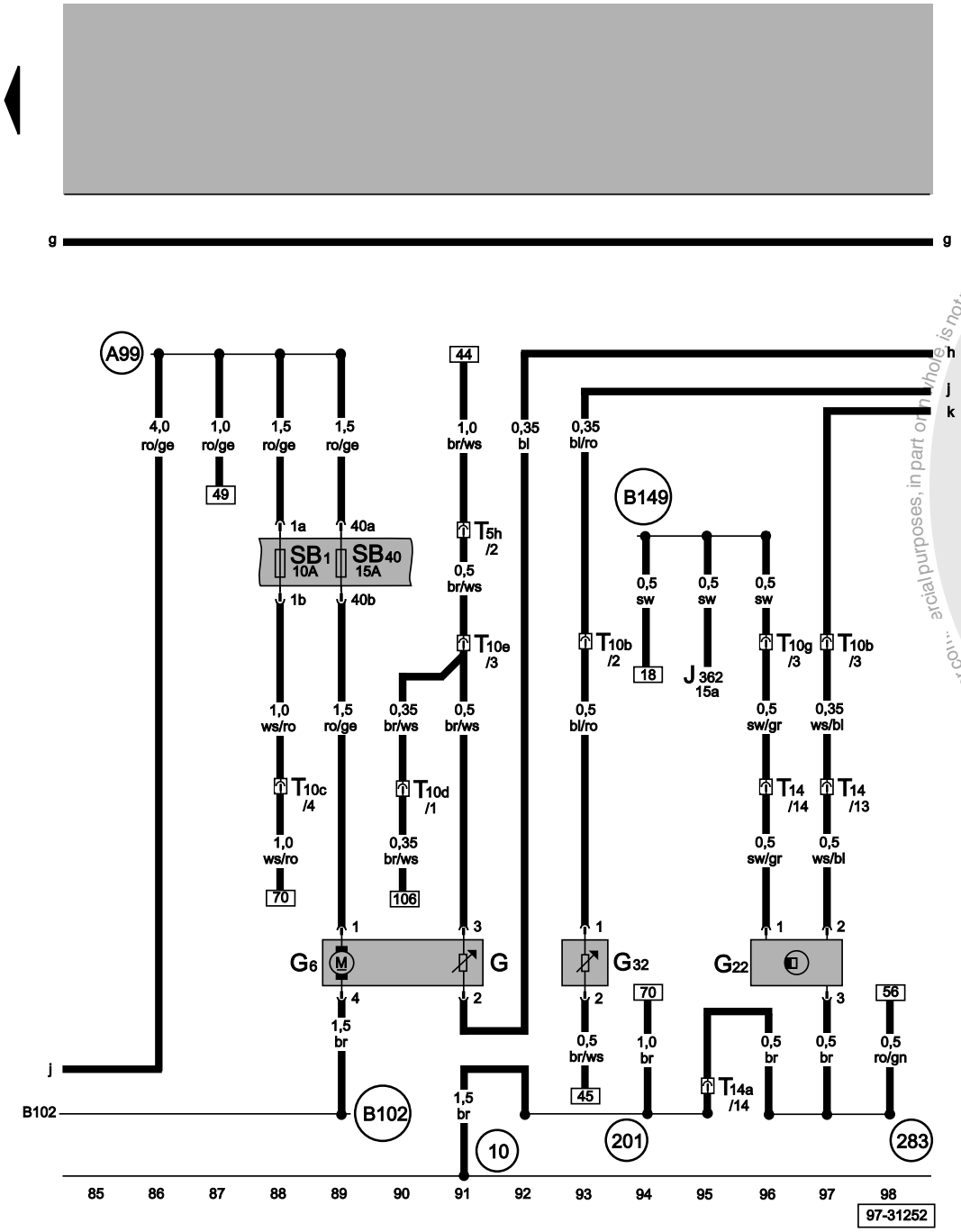

Fuel pump, speedometer sender, fuel gauge sender, coolant shortage indicator sender

J362	Immobilizer control unit
G	Fuel gauge sender
G6	Fuel pump
G22	Speedometer sender (hall sender, on gearbox)
G32	Coolant shortage indicator sender
SB1	Fuse -1- in fuse box
SB40	Fuse -40- in fuse box
T5h	5-pin connector, black, on cylinder head, left
T10b	10-pin connector, black, connector point under relay carrier
T10c	10-pin connector, blue, connector point under relay carrier
T10d	10-pin connector, red, connector point under relay carrier
T10e	10-pin connector, pink, connector point under relay carrier
T10g	10-pin connector, brown, connector point under relay carrier
T14	14-pin connector, black, on cylinder head, left
T14a	14-pin connector, brown, on cylinder head, left
10	Earth point, in plenum chamber
201	Earth connection -5-, in engine compartment wiring harness
283	Earth connection -2-, in engine prewiring wiring harness
A99	Connection -1- (87), in dash panel wiring harness
B102	Earth connection, in interior wiring harness, front left
B149	Positive (+) connection -2- (15a), in interior wiring harness

ws	=	white
sw	=	black
ro	=	red
br	=	brown
gn	=	green
bl	=	blue
gr	=	grey
li	=	purple
ge	=	yellow
or	=	orange
rs	=	pink

Protected by copyright. Copying for private or commercial purposes, in part or in whole is not permitted unless authorised by Volkswagen AG. Volkswagen AG does not guarantee or accept any liability with respect to the correctness of information in this document. Copyright by Volkswagen AG.
satelettronica

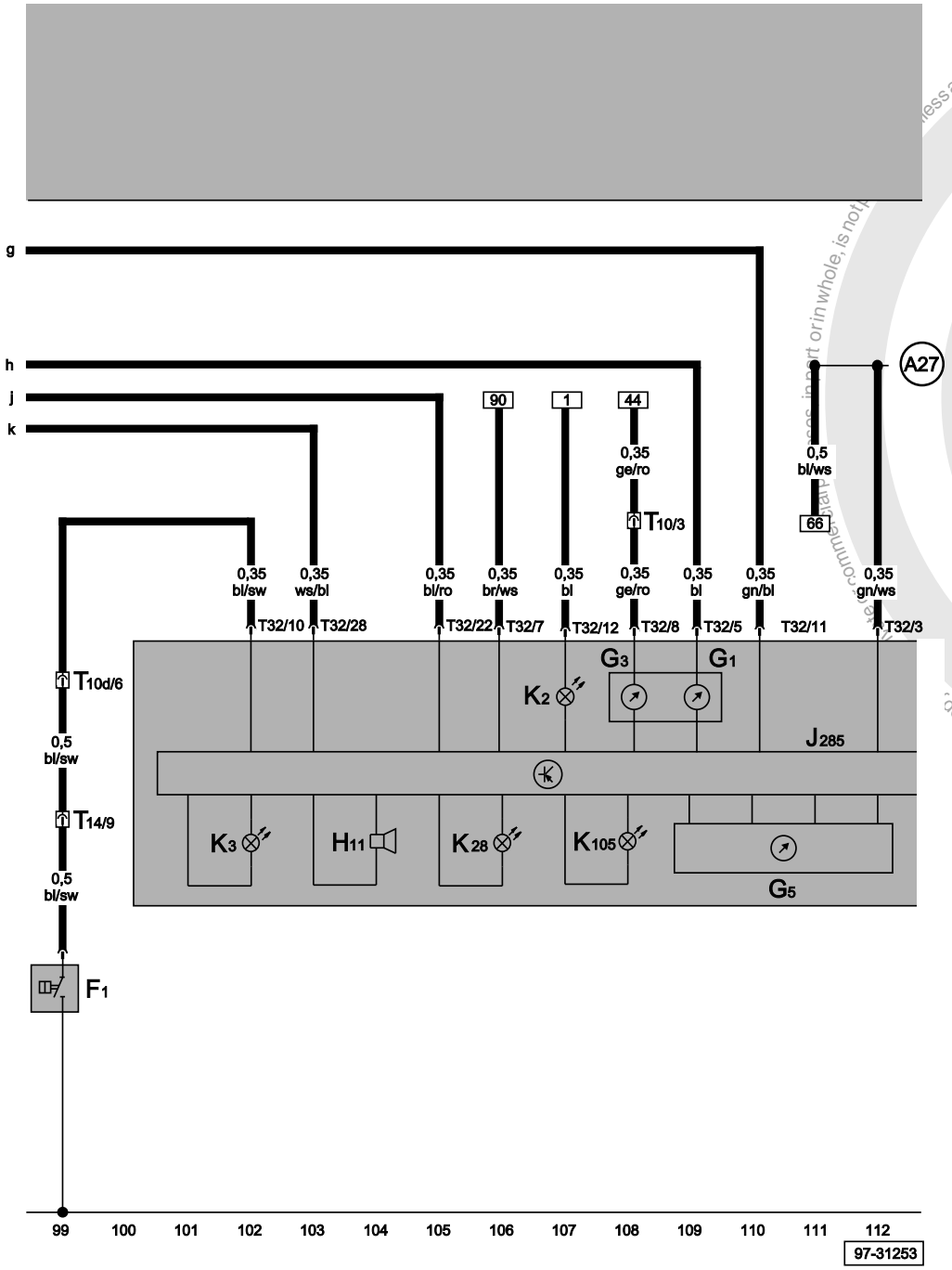

Dash panel insert, oil pressure warning, coolant temperature gauge, fuel gauge, rev. counter, warning lamps

F1	Oil pressure switch
G1	Fuel gauge
G3	Coolant temperature gauge
G5	Rev. counter
H11	Oil pressure warning buzzer
J285	Control unit with display in dash panel insert
K2	Alternator warning lamp
K3	Oil pressure warning lamp
K28	Coolant temperature/coolant shortage warning lamp
K105	Reserve fuel warning lamp
T10	10-pin connector, white, connector point under relay carrier
T10d	10-pin connector, red, connector point under relay carrier
T14	14-pin connector, black, on cylinder head, left
T32	32-pin connector, blue
A27	Connection (speed signal), in dash panel wiring harness

ws	=	white
sw	=	black
ro	=	red
br	=	brown
gn	=	green
bl	=	blue
gr	=	grey
li	=	purple
ge	=	yellow
or	=	orange
rs	=	pink

Protected by copyright. Copyright by Volkswagen AG.
Volkswagen AG does not guarantee or accept any liability with respect to the correctness of information in this document. Copyright by Volkswagen AG.
Reproduction, in part or in whole, is not permitted without authorisation by Volkswagen AG.
satelettronica

Dash panel insert, self-diagnosis connection, data bus diagnostic interface

J285	Control unit with display in dash panel insert
J362	Immobilizer control unit
J533	Data bus diagnostic interface control unit
T10s	10-pin connector, light green, connector point under relay carrier
T16	16-pin connector, self-diagnosis connection
T32	32-pin connector, green
T32a	32-pin connector, blue
A76	Connection (diagnosis wire K), in dash panel wiring harness
A121	Connection (high bus), in dash panel wiring harness
A122	Connection (low bus), in dash panel wiring harness

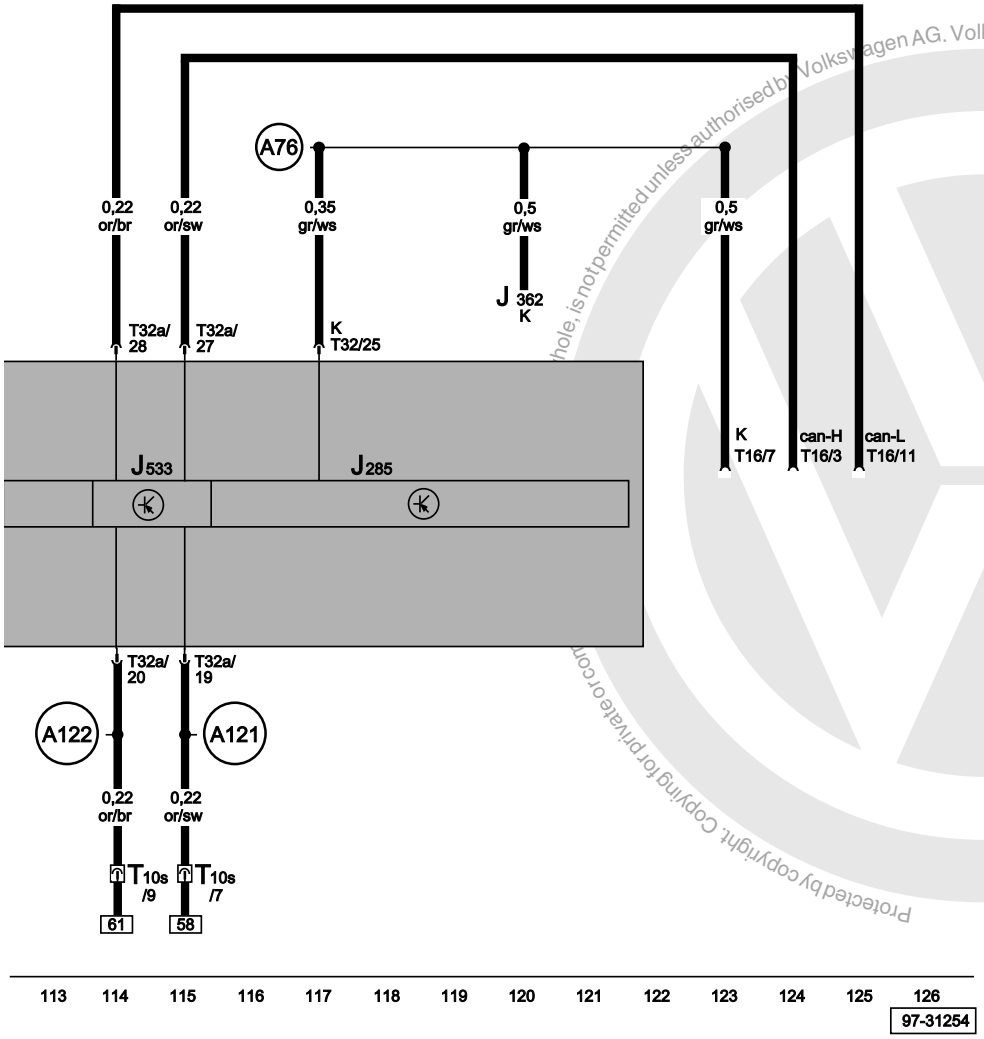

ws	=	white
sw	=	black
ro	=	red
br	=	brown
gn	=	green
bl	=	blue
gr	=	grey
li	=	purple
ge	=	yellow
or	=	orange
rs	=	pink

Protected by copyright. Copying for private or commercial purposes, in part or in whole, is not permitted unless authorised by Volkswagen AG. Volkswagen AG does not guarantee or accept any liability with respect to the correctness of information in this document. Copyright by Volkswagen AG.

satelettronica

Anti-lock brake system (ABS) with electronic differential lock (EDL)

⇒ **1.6 l/88 kW - 4CV, engine code AJV**
From August 1998

Anti-lock brake system (ABS) with electronic differential lock (EDL)

⇒ **1.0 l/37 kW - Motronic, engine codes ALD, AUC**
⇒ **1.4 l/44 kW - Motronic, engine codes AKK, AUD**
⇒ **1.4 l/55 kW - 4LV, engine code AUA**
⇒ **1.4 l/74 kW - 4LV, engine, engine code AUB**
From August 1999

Notes:
For information concerning
- Relay and fuse assignment
- Multi-pin connectors
- Control units and relays
- Earth connections

⇒ Overview of Fitting Locations!
For information concerning
- Fault Finding Programs

⇒ Guided Fault Finding

Protected by copyright. Copying for private or commercial purposes, in part or in whole, is not permitted unless authorised by Volkswagen AG. Volkswagen AG does not guarantee or accept any liability with respect to the correctness of information in this document. Copyright by Volkswagen AG.

satelettronica

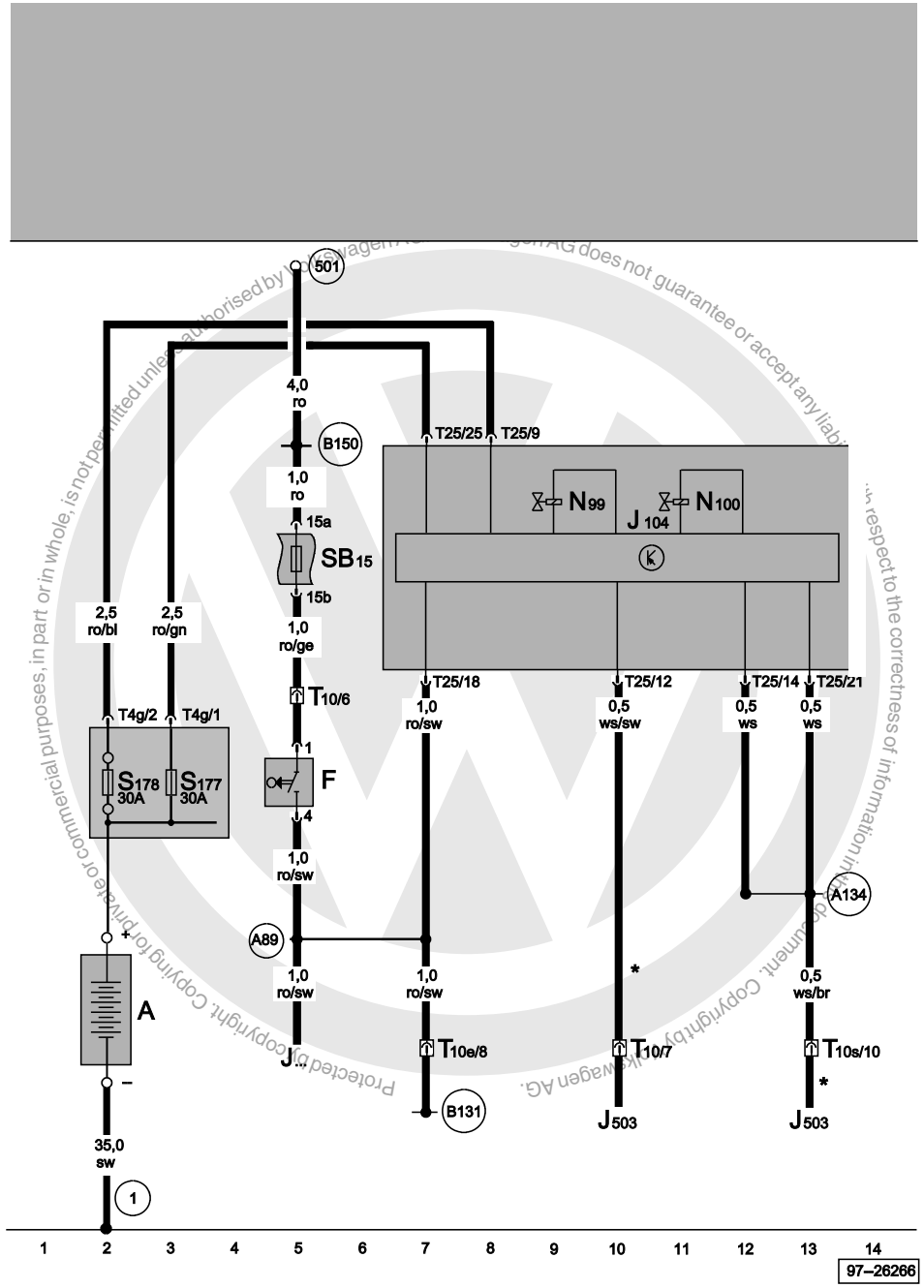

ABS control unit, brake light switch, fuses on battery fuse holder

A	Battery
F	Brake light switch
J104	ABS control unit, on left in engine compartment
J...	Engine control units
J503	Control unit with display for radio and navigation system
N99	Front right ABS inlet valve
N100	Front right ABS outlet valve
SB15	Fuse 15 on fuse holder
S177	Fuse 5 (30), on battery fuse holder
S178	Fuse 6 (30), on battery fuse holder
T4g	4-pin connector, near battery
T10	10-pin connector, near relay station
T10e	10-pin connector, light pink, near relay station
T10s	10-pin connector, light green, near relay station
T25	25-pin connector, black, on ABS control unit
1	Earth strap, battery - body
501	Screw connection 2 (30), on relay plate
A89	Connection 2 (54), in dash panel wiring harness
A134	Connection (right ABS impulse), in dash panel wiring harness
B131	Connection (54), in interior wiring harness
B150	Positive connection 2 (30a), in interior wiring harness
*	Only models with navigation

ws	=	white
sw	=	black
ro	=	red
br	=	brown
gn	=	green
bl	=	blue
gr	=	grey
li	=	purple
ge	=	yellow
or	=	orange
rs	=	pink

satelettronica

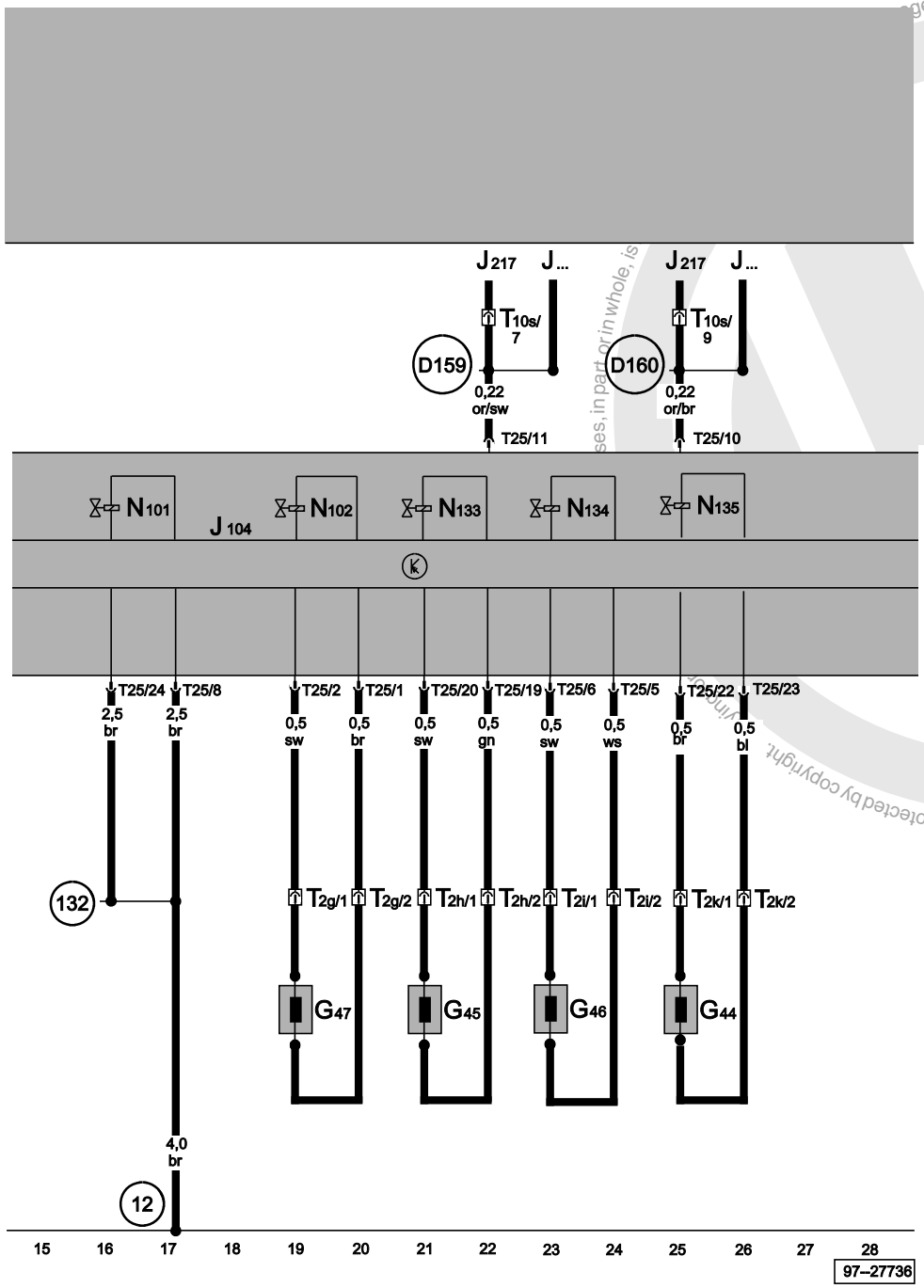

ABS control unit, inlet valves, outlet valves

G44	Rear right speed sensor
G45	Front right speed sensor
G46	Rear left speed sensor
G47	Front left speed sensor
J...	Engine control units
J104	ABS control unit, on left in engine compartment
J217	Automatic gearbox control unit, centre in plenum chamber
N101	Front left ABS inlet valve
N102	Front left ABS outlet valve
N133	Rear right ABS inlet valve
N134	Rear left ABS inlet valve
N135	Rear right ABS outlet valve
T2g	2-pin connector, black, behind left suspension strut
T2h	2-pin connector, black, behind right suspension strut
T2i	2-pin connector, black, under rear bench seat
T2k	2-pin connector, black, under rear bench seat
T10s	10-pin connector, light green, near relay station
T25	25-pin connector, black, on ABS control unit
12	Earth point, on left in engine compartment
132	Earth connection 3, in engine compartment wiring harness
D159	Connection (high bus), in engine compartment wiring harness
D160	Connection (low bus), in engine compartment wiring harness

ws	=	white
sw	=	black
ro	=	red
br	=	brown
gn	=	green
bl	=	blue
gr	=	grey
li = purple
ge = yellow
or = orange
rs = pink

Protected by copyright. Copyright by Volkswagen AG. Volkswagen AG does not guarantee or accept any liability with respect to the correctness of information in this document. Copyright by Volkswagen AG.
satelettronica

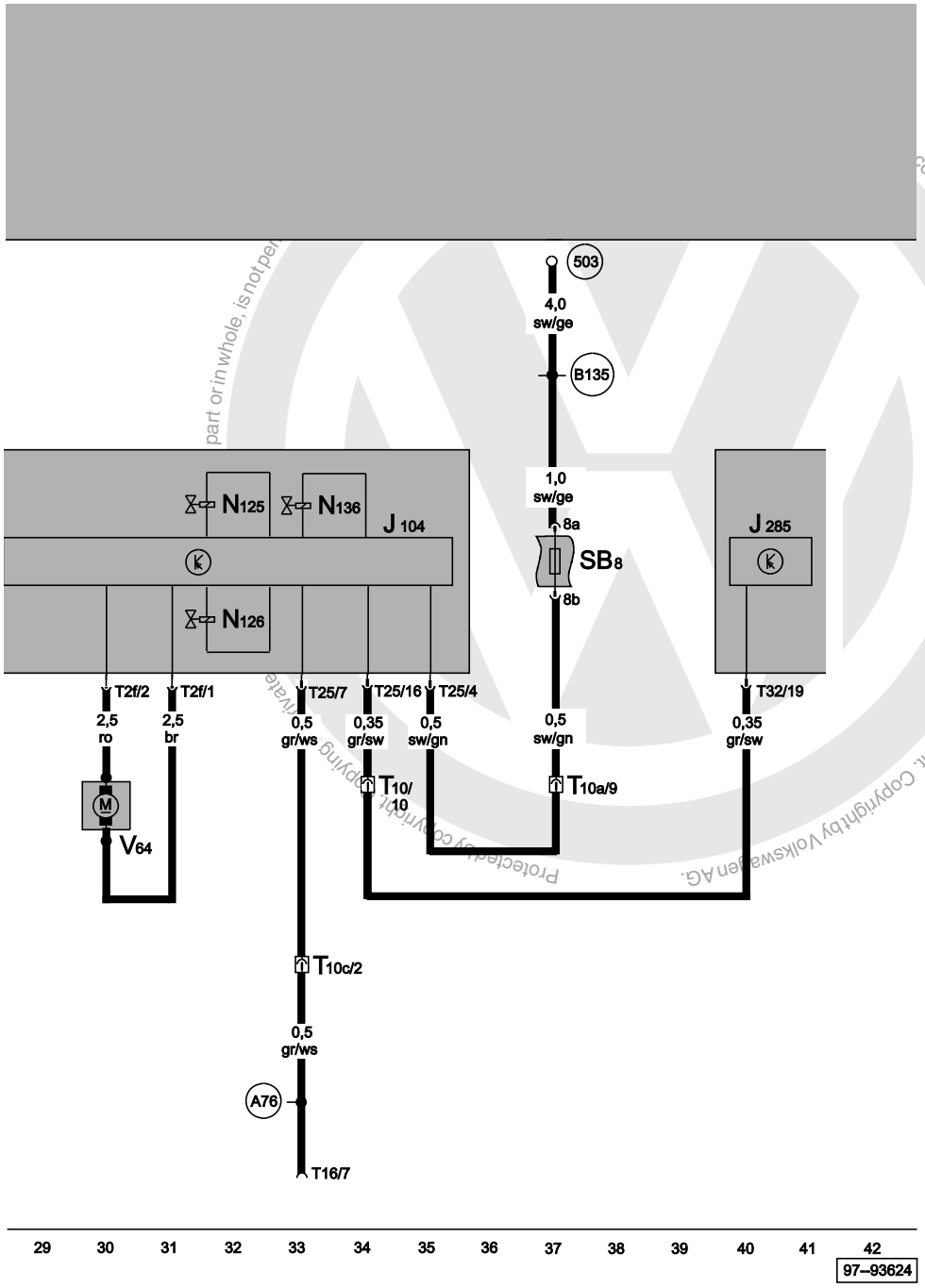

ABS control unit, inlet valves, dash panel insert, self-diagnosis connection, differential lock valves 1 and 2

J104	ABS control unit, on left in engine compartment
J285	Control unit with display in dash panel insert
N125	Differential lock valve 1
N126	Differential lock valve 2
N136	Rear left ABS outlet valve
SB8	Fuse 8 in relay plate fuse holder
T2f	2-pin connector, black, on ABS control unit
T10	10-pin connector, white, near relay station
T10a	10-pin connector, green, near relay station
T10c	10-pin connector, blue, near relay station
T16	16-pin connector, self-diagnosis connection
T25	25-pin connector, black, on ABS control unit
T32	32-pin connector, blue, on dash panel insert
V64	ABS hydraulic pump, on ABS control unit
503	Screw connection (75x), on relay plate
A76	Connection (K-diagnosis wire), in dash panel wiring harness
B135	Connection 1 (15a), in interior wiring harness

ws	=	white
sw	=	black
ro	=	red
br	=	brown
gn	=	green
bl	=	blue
gr	=	grey
li	=	purple
ge	=	yellow
or	=	orange
rs	=	pink

satelettronica

Anti-lock brake system (ABS) with electronic differential lock (EDL)

⇒ **1.9 ltr./47kW diesel engine, engine code AEF**

From October 1999

For alternatives to relay and fuse positions as well as multi-pin connector wiring - see "Fitting locations" section.

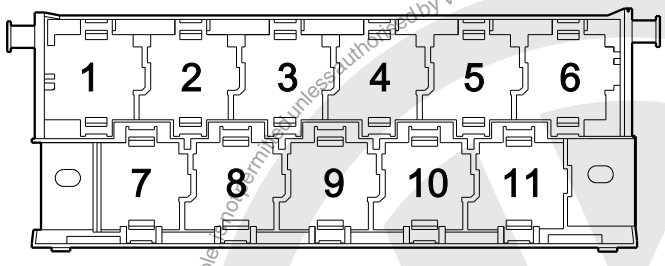

97-22850

Fuse colours

30 A - green
25 A - white
20 A - yellow
15 A - blue
10 A - red
7.5 A - brown
5 A - beige
3 A - lilac

Protected by copyright. Copying for private or commercial purposes, in part or in whole, is not permitted unless authorised by Volkswagen AG. Volkswagen AG does not guarantee or accept any liability with respect to the correctness of information in this document. Copyright by Volkswagen AG.

satelettronica

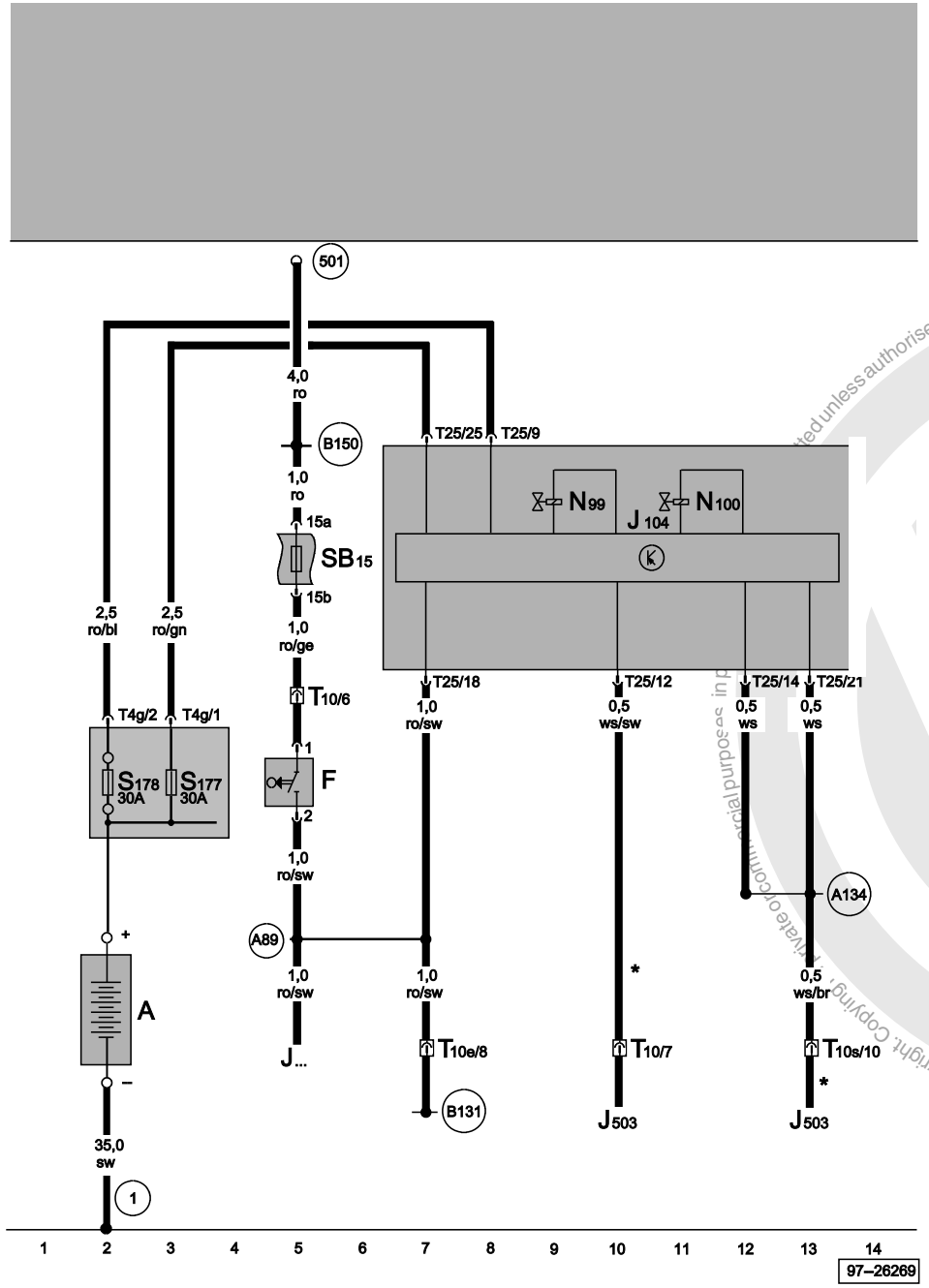

ABS control unit, brake light switch, fuses in battery fuse holder

A	Battery
F	Brake light switch
J104	ABS control unit, left in engine compartment
J...	Engine control unit
J503	Control unit with display for radio and navigation
N99	ABS inlet valve, front right
N100	ABS outlet valve, front right
SB15	Fuse -15- on fuse holder
S177	Fuse -5- (30), in battery fuse holder
S178	Fuse-6- (30), in battery fuse holder
T4g	4-pin connector, near battery
T10	10-pin connector, near relay station
T10e	10-pin connector, light pink, near relay station
T10s	10-pin connector, light green, near relay station
T25	25-pin connector, black, on ABS control unit
1	Earth strap, battery - body
501	Screw connection -2- (30), on relay plate
A89	Connection -2- (54), in dash panel wiring harness
A134	Connection (ABS impulse right), in dash panel wiring harness
B131	Connection (54), in interior wiring harness
B150	Positive connection -2- (30a), in interior wiring harness
*	For vehicles with navigation only

ws	=	white
sw	=	black
ro	=	red
br	=	brown
gn	=	green
bl	=	blue
gr	=	grey
li	=	purple
ge	=	yellow
or	=	orange
rs	=	pink

satelettronica

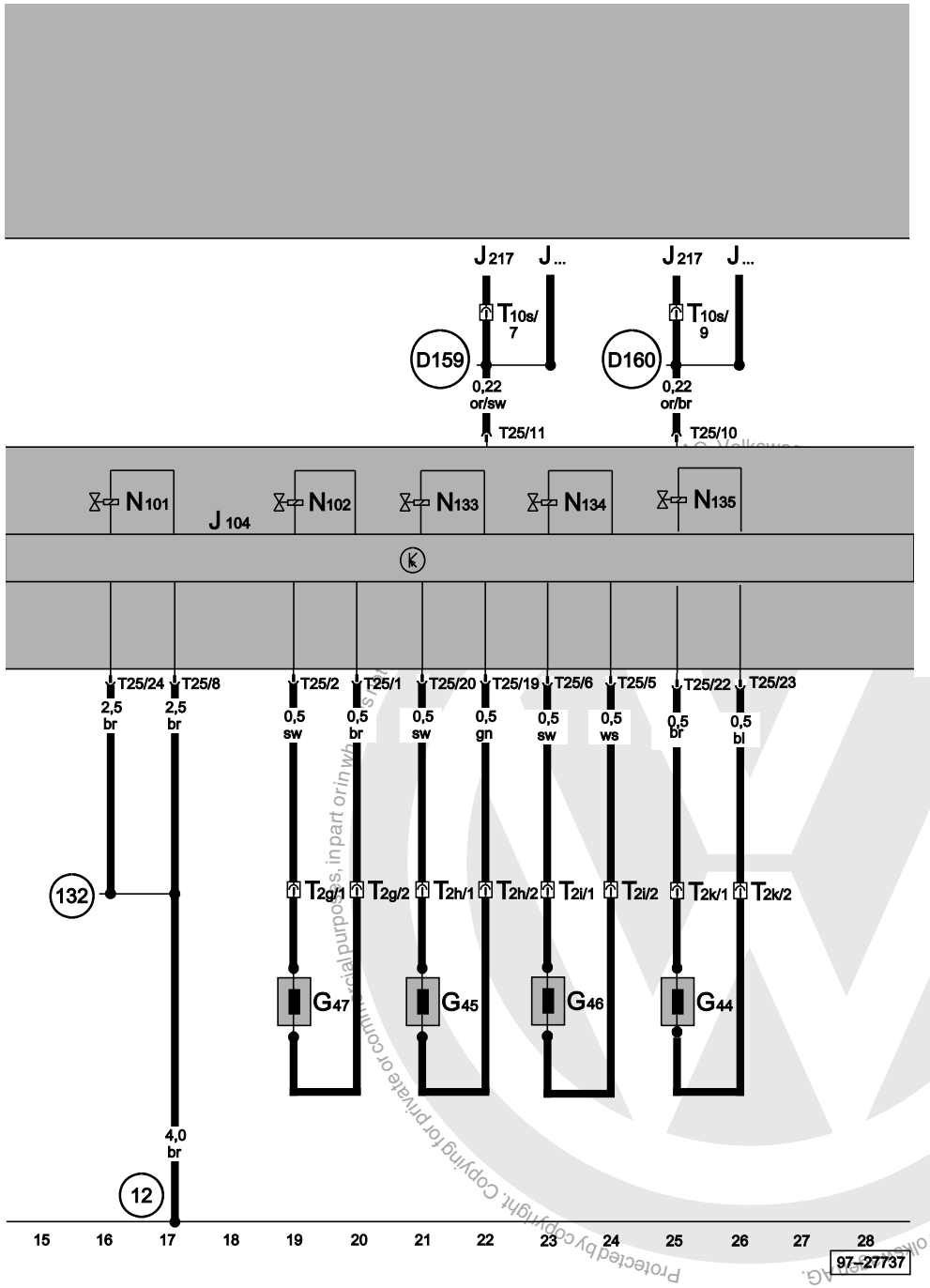

ABS control unit, inlet valves, outlet valves

G44	Rear right speed sensor
G45	Front right speed sensor
G46	Rear left speed sensor
G47	Front left speed sensor
J...	Engine control units
J104	ABS control unit, in engine compartment, left
J217	Automatic gearbox control unit, in plenum chamber, centre
N101	ABS inlet valve, front left
N102	ABS outlet valve, front left
N133	ABS inlet valve, rear right
N134	ABS inlet valve, rear left
N135	ABS outlet valve, rear right
T2g	2-pin connector, black, rear suspension strut, left
T2h	2-pin connector, black, rear suspension strut, right
T2i	2-pin connector, black, under rear seat bench
T2k	2-pin connector, black, under rear seat bench
T10s	10-pin connector, light green, near relay station
T25	25-pin connector, black, on ABS control unit
12	Earth point, in engine compartment, left
132	Earth connection -3-, in engine compartment wiring harness
D159	Connection (high bus), in engine compartment wiring harness
D160	Connection (low bus), in engine compartment wiring harness

ws	=	white
sw	=	black
ro	=	red
br	=	brown
gn	=	green
bl	=	blue
gr	=	grey
li	=	purple
ge	=	yellow
or	=	orange
rs	=	pink

Protected by copyright. Copying for private or commercial purposes, in part or in whole, is not permitted unless authorised by Volkswagen AG. guarantee or accept any liability with respect to the correctness of information in this document. Copyright by Volkswagen AG.

satelettronica

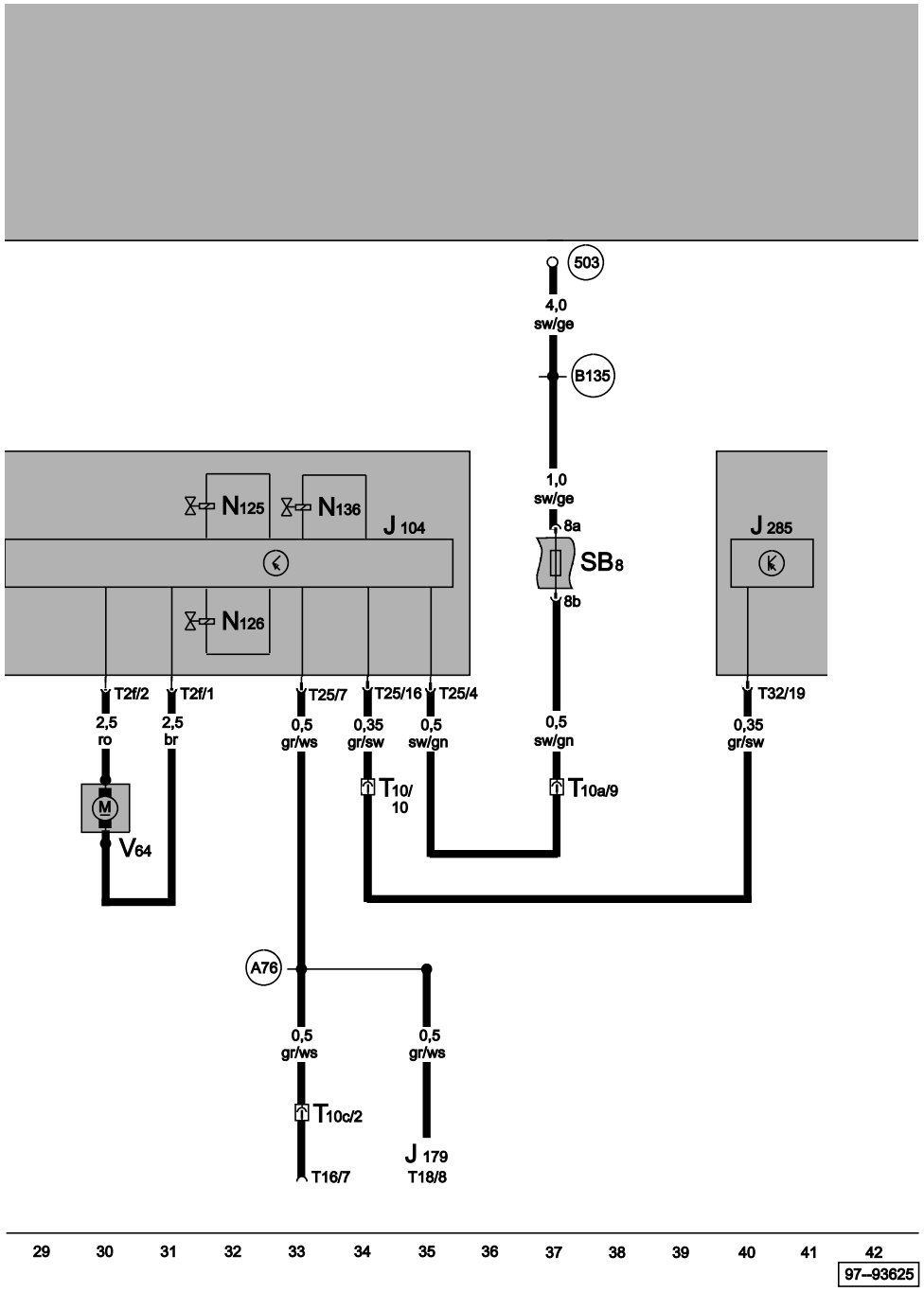

ABS control unit, inlet valves, dash panel insert, self-diagnosis connection, differential lock valve 1 and 2

J104	ABS control unit, in engine compartment, left
J179	Automatic glow period control unit, above the relay plate
J285	Control unit with display in dash panel insert
N125	Differential lock valve 1
N126	Differential lock valve 2
N136	ABS outlet valve, rear left
SB8	Fuse -8- in relay plate fuse box
T2f	2-pin connector, black, on ABS control unit
T10	10-pin connector, white, near relay station
T10a	10-pin connector, green, near relay station
T10c	10-pin connector, blue, near relay station
T16	16-pin connector, self-diagnosis connection
T18	18-pin connector, black
T25	25-pin connector, black, on ABS control unit
T32	32-pin connector, blue, on dash panel insert
V64	ABS hydraulic pump, on ABS control unit
503	Screw connection (75X), on relay plate
A76	Connection (diagnosis wire K), in dash panel wiring harness
B135	Connection -1- (15a), in interior wiring harness

ws	=	white
sw	=	black
ro	=	red
br	=	brown
gn	=	green
bl	=	blue
gr	=	grey
li	=	purple
ge	=	yellow
or	=	orange
rs	=	pink

Protected by copyright. Copying for private or commercial purposes, in part or in whole, is not permitted unless authorised by Volkswagen AG. Volkswagen AG does not guarantee or accept any liability with respect to the correctness of information in this document. Copyright by Volkswagen AG.
satelettronica

Anti-lock brake system (ABS) with electronic differential lock (EDL)

⇒ 1.4 litre/55 kW Turbo diesel engine with unit injectors, engine codes AMF
⇒ 1.7 litre/42 kW Naturally aspirated diesel, engine codes AHG
⇒ 1.7 litre/44 kW Naturally aspirated diesel, engine codes AKU
⇒ 1.9 litre/47 kW Naturally aspirated diesel, engine codes AGD

From October 1999

Anti-lock brake system (ABS) with electronic differential lock (EDL)

⇒ 1.9 litre/47 kW Naturally aspirated diesel, engine codes ASX

From May 2000

For alternatives to relay and fuse positions as well as multi-pin connector wiring - see "Fitting locations" section.

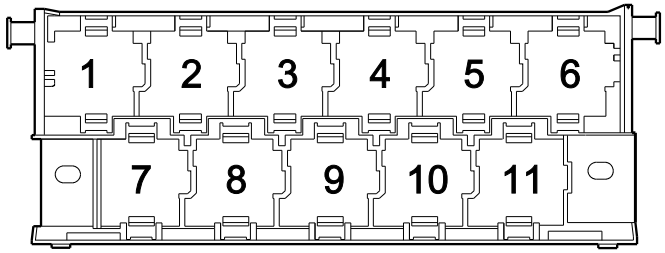

97-22850

Fuse colours

30 A - green
25 A - white
20 A - yellow
15 A - blue
10 A - red
7.5 A - brown
5 A - beige
3 A - lilac

Protected by copyright. Copying for private or commercial purposes, in part or in whole, is not permitted unless authorised by Volkswagen AG. Volkswagen AG does not guarantee or accept any liability with respect to the correctness of information in this document. Copyright by Volkswagen AG.

satelettronica

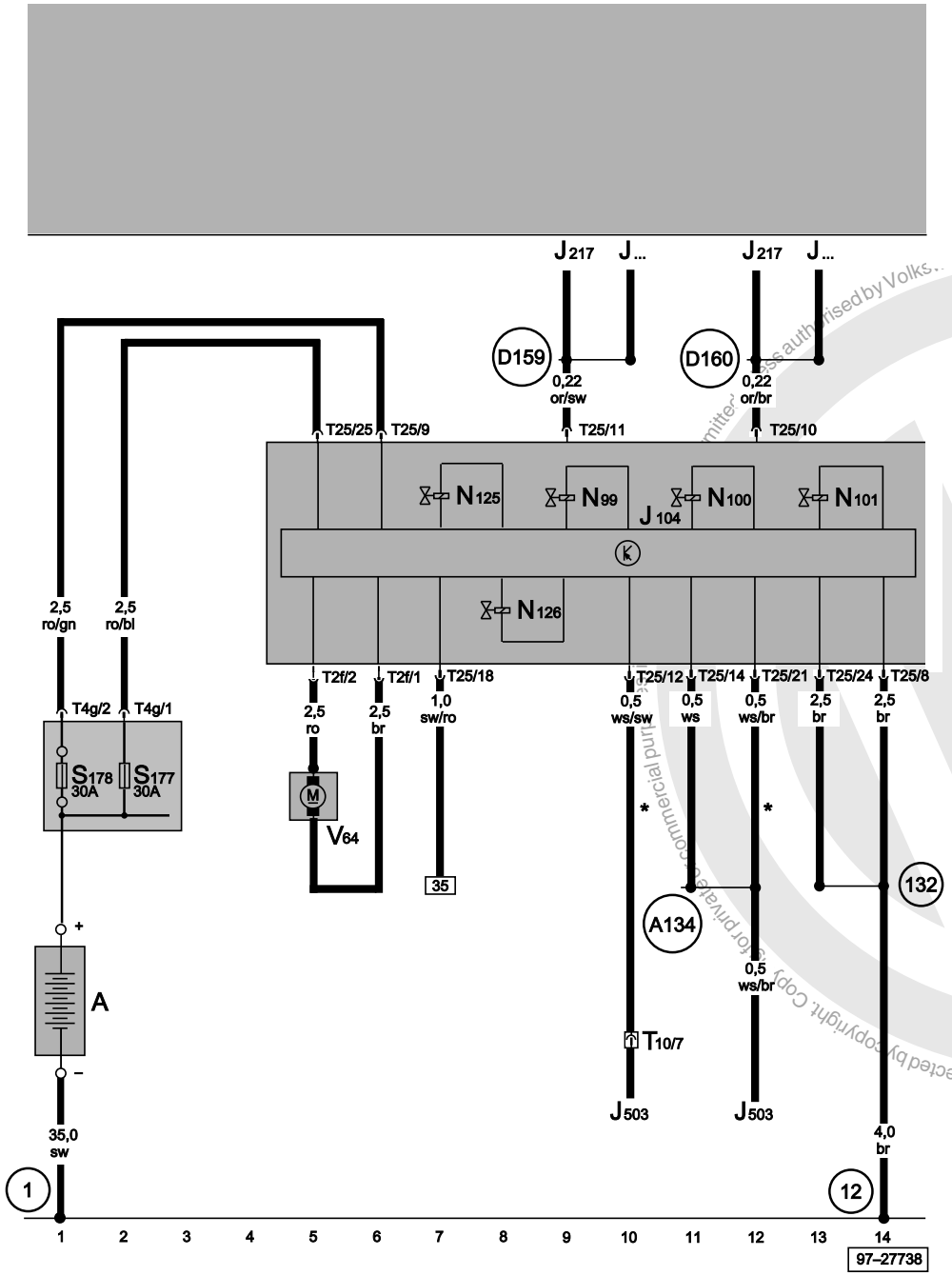

ABS control unit, fuses in fuse box / battery, differential lock valve 1 and 2

A	Battery
J104	ABS control unit, in engine compartment, left
J217	Automatic gearbox control unit
J503	Control unit with display for radio and navigation
N99	ABS inlet valve, front right
N100	ABS outlet valve, front right
N101	ABS inlet valve, front left
N125	Differential lock valve 1
N126	Differential lock valve 2
S177	Fuse -5- (30), in fuse box/battery
S178	Fuse -6- (30), in fuse box/battery
T2f	2-pin connector, black
T4g	4-pin connector, black
T10	10-pin connector, white
T25	25-pin connector, black
V64	ABS hydraulic pump, on ABS control unit
1	Earth strap, battery - body
12	Earth point, in engine compartment, left
132	Earth connection -3-, in engine compartment wiring harness
D159	Connection (high bus), in engine compartment wiring harness
D160	Connection (low bus), in engine compartment wiring harness
A134	Connection (ABS impulse right), in dash panel wiring harness
*	Only models with navigation

ws	=	white
sw	=	black
ro	=	red
br	=	brown
gn	=	green
bl	=	blue
gr	=	grey
li	=	purple
ge	=	yellow
or	=	orange
rs	=	pink

Protected by copyright. Copyright by Volkswagen AG. Copy for private or commercial purposes authorised by Volkswagen AG. Volkswagen AG does not guarantee or accept any liability with respect to the correctness of information in this document.
satelettronica

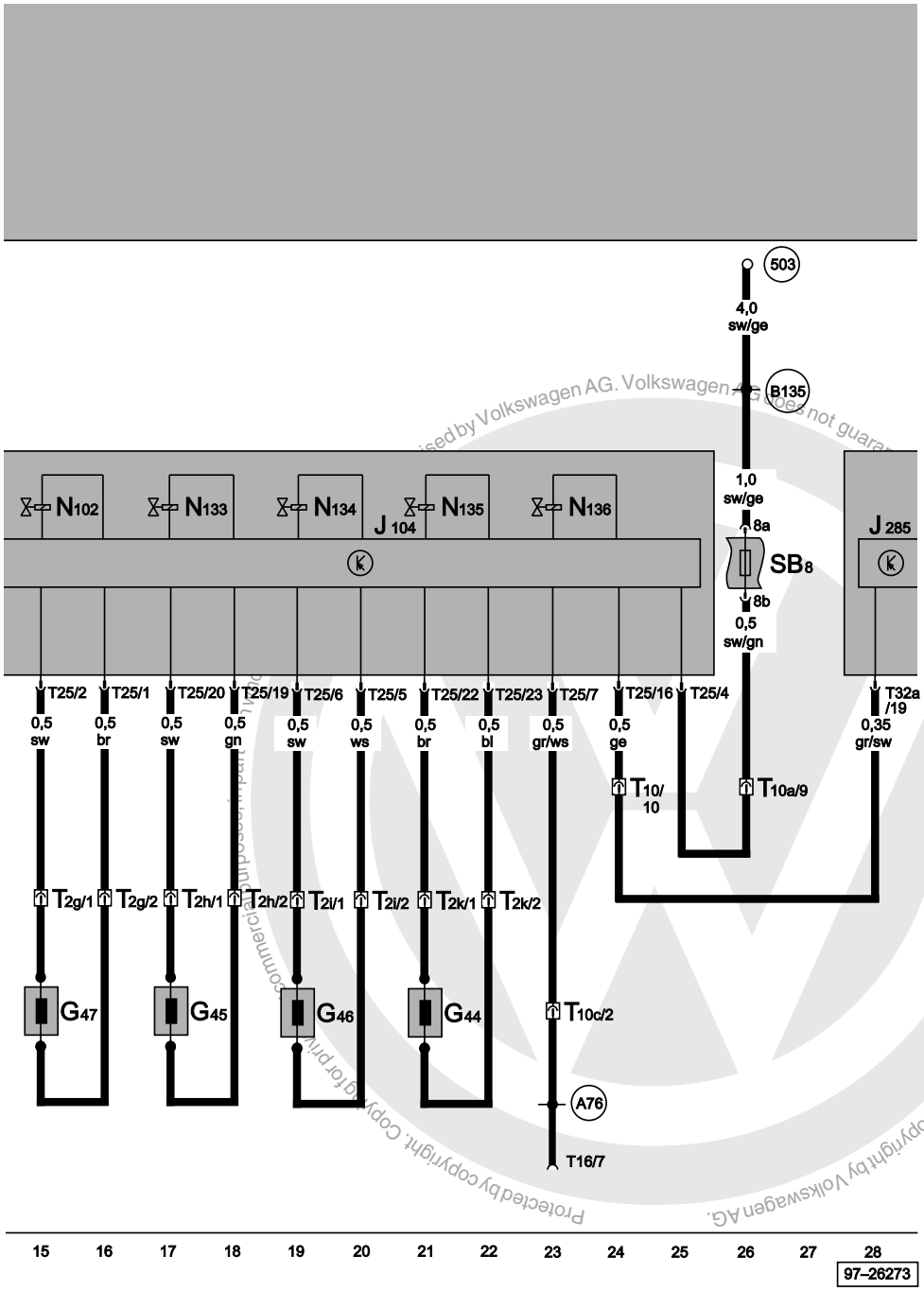

ABS control unit, inlet valves, dash panel insert, self-diagnosis connection

G44	Rear right speed sensor
G45	Front right speed sensor
G46	Rear left speed sensor
G47	Front left speed sensor
J104	ABS control unit, left in engine compartment
J285	Control unit with display in dash panel insert
N102	ABS outlet valve, front left
N133	ABS inlet valve, rear right
N134	ABS inlet valve, rear left
N135	ABS outlet valve, rear right
N136	ABS outlet valve, rear left
SB8	Fuse -8- on fuse holder
T2g	2-pin connector, black, behind left suspension strut
T2h	2-pin connector, black, behind right suspension strut
T2i	2-pin connector, black
T2k	2-pin connector, black
T10	10-pin connector, white
T10a	10-pin connector, green
T10c	10-pin connector, blue
T16	16-pin connector, self-diagnosis connection
T25	25-pin connector, black
T32a	32-pin connector, blue, on dash panel insert
503	Screw connection (75x), on relay plate
A76	Connection (diagnosis wire K), in dash panel wiring harness
B135	Connection -1- (15a), in interior wiring harness

ws	=	white
sw	=	black
ro	=	red
br	=	brown
gn	=	green
bl	=	blue
gr	=	grey
li	=	purple
ge	=	yellow
or	=	orange
rs	=	pink

Protected by copyright. Copyright by Volkswagen AG.
Commercial use or publication not permitted by Volkswagen AG. Volkswagen AG does not guarantee or accept any liability with respect to the correctness of information in this document.
satelettronica

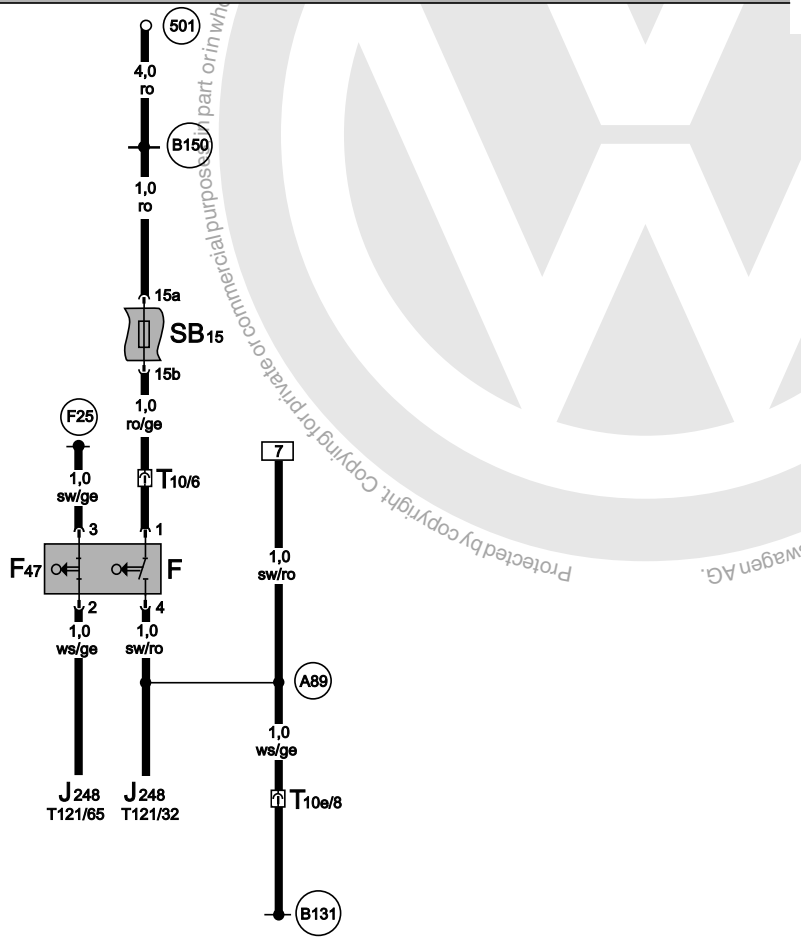

Brake light switch

F	Brake light switch
F47	Cruise cont. sys. brake pedal switch (diesel direct inj. system)
J248	Diesel direct injection system control unit, right in plenum chamber
SB15	Fuse -15- on fuse holder
T10	10-pin connector, white, near relay station
T10e	10-pin connector, light pink, near relay station
T121	121-pin connector
501	Screw connection -2- (30), on relay plate
A89	Connection -2- (54), in dash panel wiring harness
B131	Connection (54), in interior wiring harness
B150	Positive connection -2- (30a), in interior wiring harness
F25	Connection -1-, in diesel direct injection system wiring harness

ws	=	white
sw	=	black
ro	=	red
br	=	brown
gn	=	green
bl	=	blue
gr	=	grey
li	=	purple
ge	=	yellow
or	=	orange
rs	=	pink

Protected by copyright. Copying for private or commercial purposes, in part or in whole, is not permitted unless authorised by Volkswagen AG. Volkswagen AG does not guarantee or accept any liability with respect to the correctness of information in this document. Copyright by Volkswagen AG.

satelettronica

Anti-lock brake system (ABS) with electronic differential lock (EDL), traction control system (TCS) and electronic stabilisation program (ESP)

from September 1999

Notes:

For information concerning

- Relay and fuse assignment
- Multi-pin connectors
- Control units and relays
- Earth connections

⇒ Overview of Fitting Locations!

For information concerning

- Fault Finding Programs

⇒ Guided Fault Finding

Protected by copyright. Copying for private or commercial purposes, in part or whole, is not permitted unless authorised by Volkswagen AG. Volkswagen AG does not guarantee or accept any liability with respect to the correctness of information in this document. Copyright by Volkswagen AG.

satelettronica

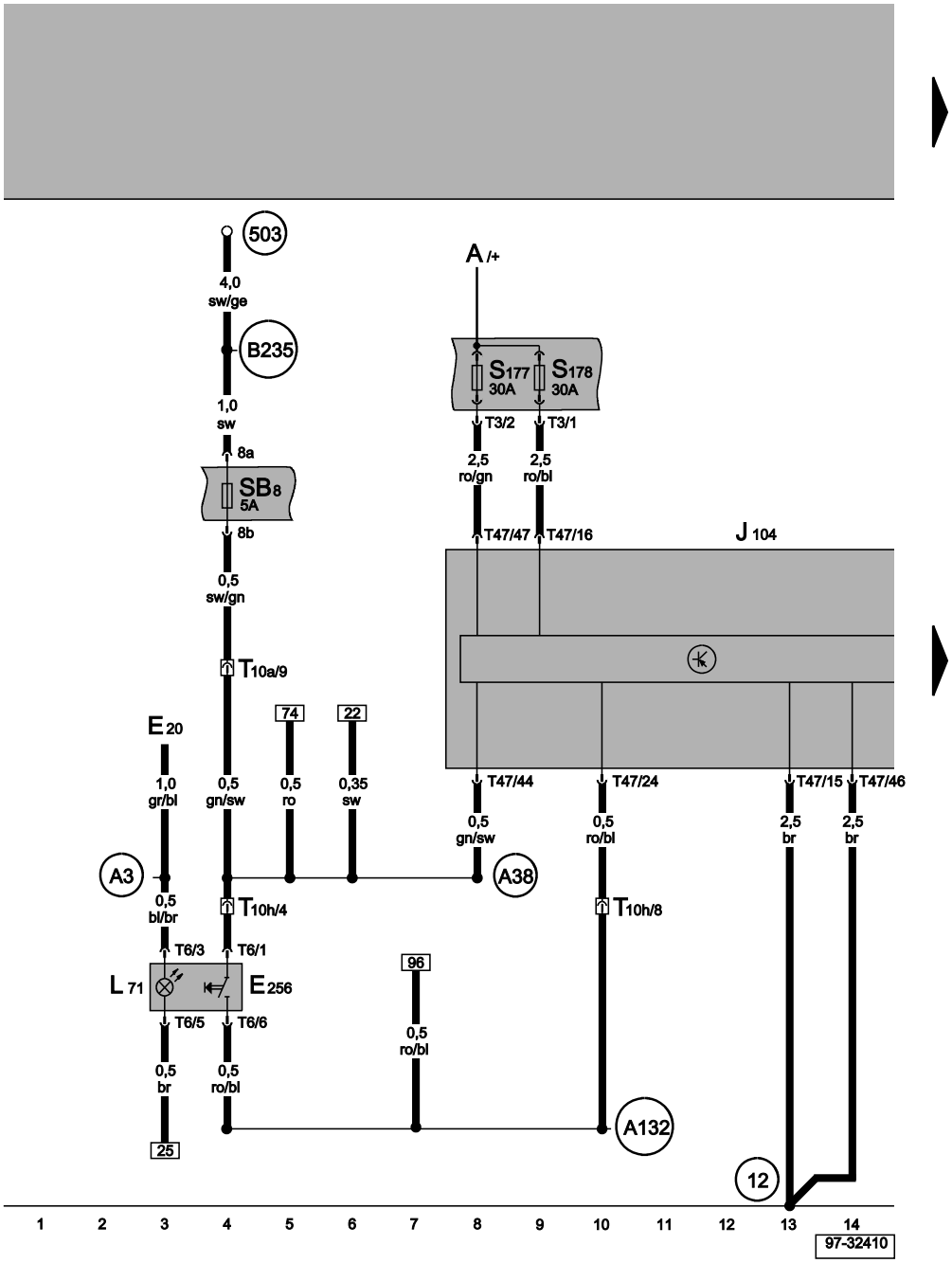

ABS control unit with EDL/TCS/ESP, TCS and ESP button, fuses

A	Battery
E20	Switch and instrument illumination regulator
E256	TCS and ESP button
J104	ABS control unit with EDL/TCS/ESP, on left in engine compartment
L71	Traction control switch illumination
SB8	Fuse 8 in relay plate fuse holder
S178	Fuse 6 (30), on battery fuse holder
S177	Fuse 2 (30), on battery fuse holder
T3	3-pin connector
T6	6-pin connector
T10a	10-pin connector, green, near relay station
T10h	10-pin connector, orange, near relay station
T47	47-pin connector
12	Earth point, on left in engine compartment
503	Screw connection (75x), on relay plate
A3	Positive connection (58), in dash panel wiring harness
A38	Positive connection 2 (15a), in dash panel wiring harness
A132	Connection (TCS/ESP), in dash panel wiring harness
B235	Positive connection 4 (15a), in interior wiring harness

ws	=	white
sw	=	black
ro	=	red
br	=	brown
gn	=	green
bl	=	blue
gr	=	grey
li	=	purple
ge	=	yellow
or	=	orange
rs	=	pink

Protected by copyright. Copying for private or commercial purposes, in part or in whole, is not permitted unless authorised by Volkswagen AG. Volkswagen AG does not guarantee or accept any liability with respect to the correctness of information in this document. Copyright by Volkswagen AG.
satelettronica

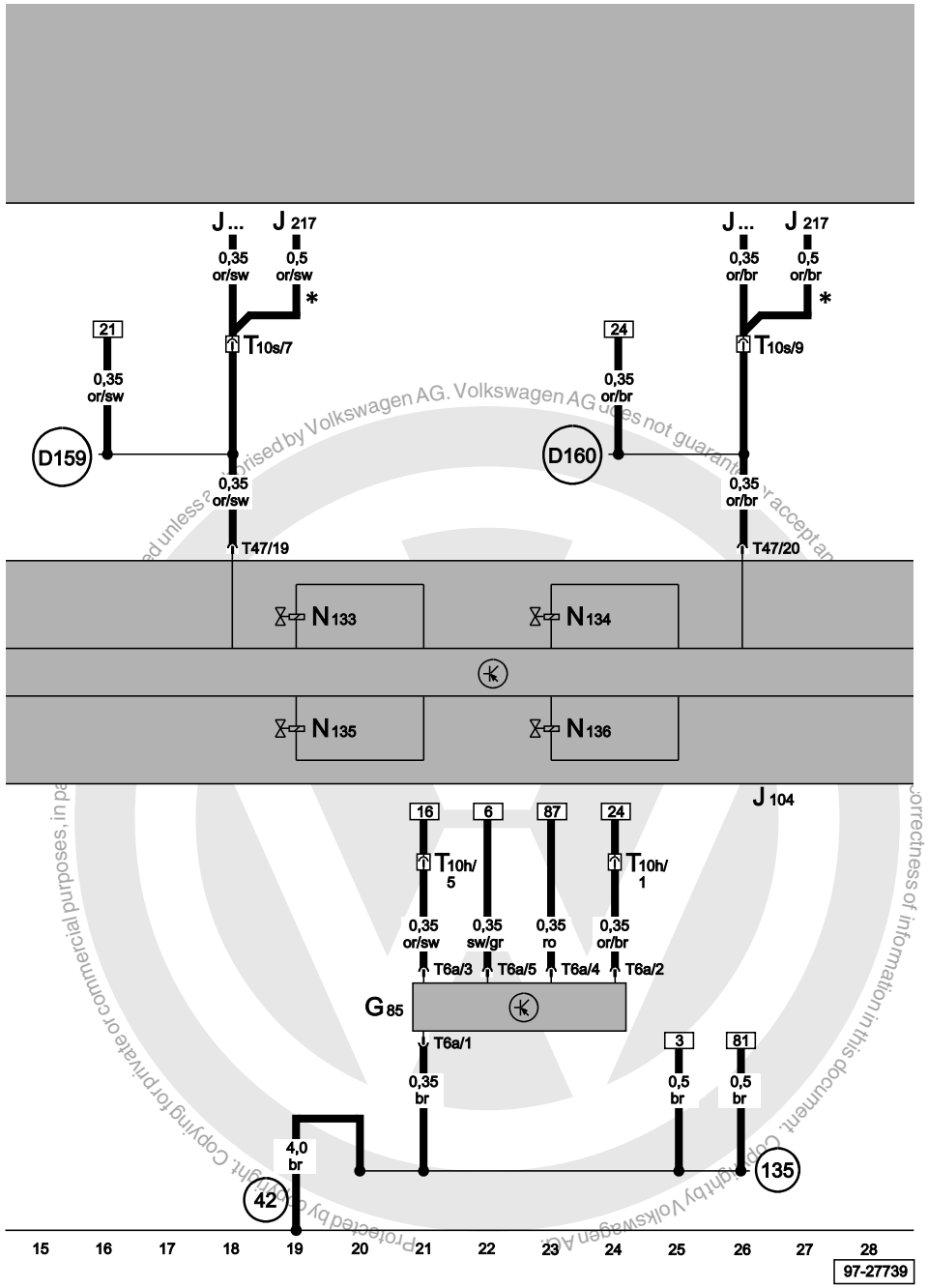

ABS/ABS control unit with EDL/TCS/ESP, steering angle sender

G85	Steering angle sender, on steering column
J...	Engine control units
J104	ABS control unit with EDL/TCS/ESP, on left in engine compartment
J217	Automatic gearbox control unit, centre in plenum chamber
N133	Rear right ABS inlet valve
N134	Rear left ABS inlet valve
N135	Rear right ABS outlet valve
N136	Rear left ABS outlet valve
T6a	6-pin connector
T10h	10-pin connector, orange, near relay station
T10s	10-pin connector, light green, near relay station
T47	47-pin connector
42	Earth point, next to steering column
135	Earth connection 2, in dash panel wiring harness
D159	Connection (high bus), in engine compartment wiring harness
D160	Connection (low bus), in engine compartment wiring harness
*	Only models with automatic gearbox

ws	=	white
sw	=	black
ro	=	red
br	=	brown
gn	=	green
bl	=	blue
gr	=	grey
li	=	purple
ge	=	yellow
or	=	orange
rs	=	pink

satelettronica

ABS/ABS control unit with EDL/TCS/ESP, speed sensor

G44	Rear right speed sensor
G45	Front right speed sensor
G46	Rear left speed sensor
G47	Front left speed sensor
J104	ABS control unit with EDL/TCS/ESP, on left in engine compartment
N99	Front right ABS inlet valve
N100	Front right ABS outlet valve
N101	Front left ABS inlet valve
N102	Front left ABS outlet valve
N227	Vehicle stabilisation program high-pressure valve 1
N228	Vehicle stabilisation program high-pressure valve 2
T47	47-pin connector

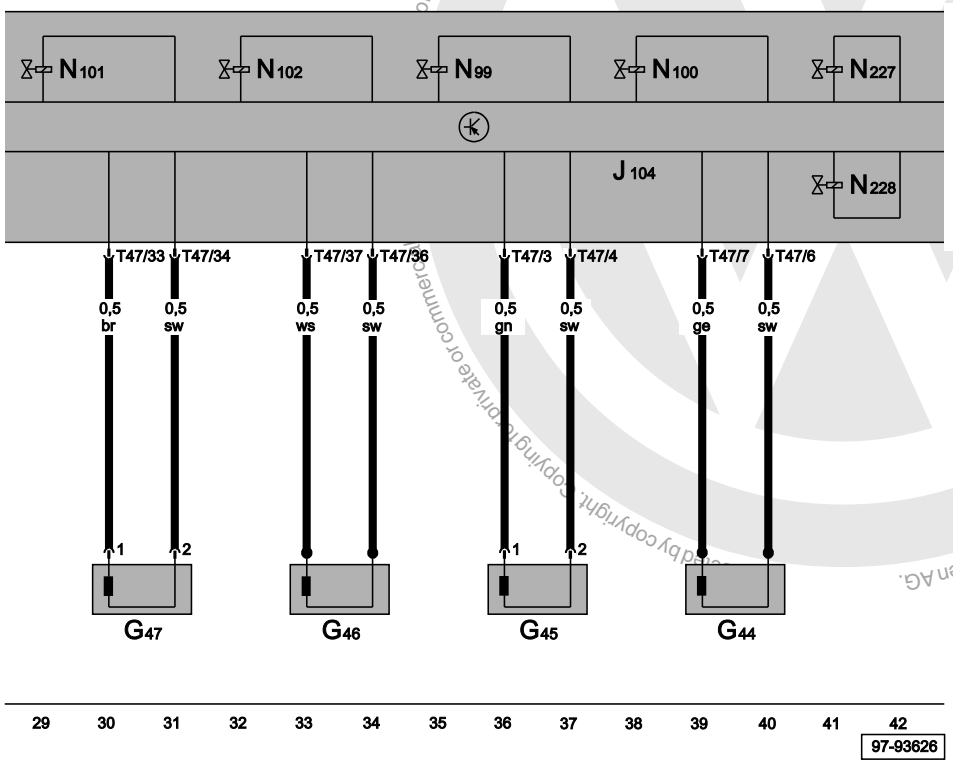

ws	=	white
sw	=	black
ro	=	red
br	=	brown
gn	=	green
bl	=	blue
gr	=	grey
li	=	purple
ge	=	yellow
or	=	orange
rs	=	pink

ple, is not permitted unless authorised by Volkswagen AG. Volkswagen AG does not guarantee or accept any liability with respect to the correctness of information in this document. Copyright by Volkswagen AG.
Copyright by copyright. Copying for private or commercial purposes, is not permitted unless authorised by Volkswagen AG.
satelettronica

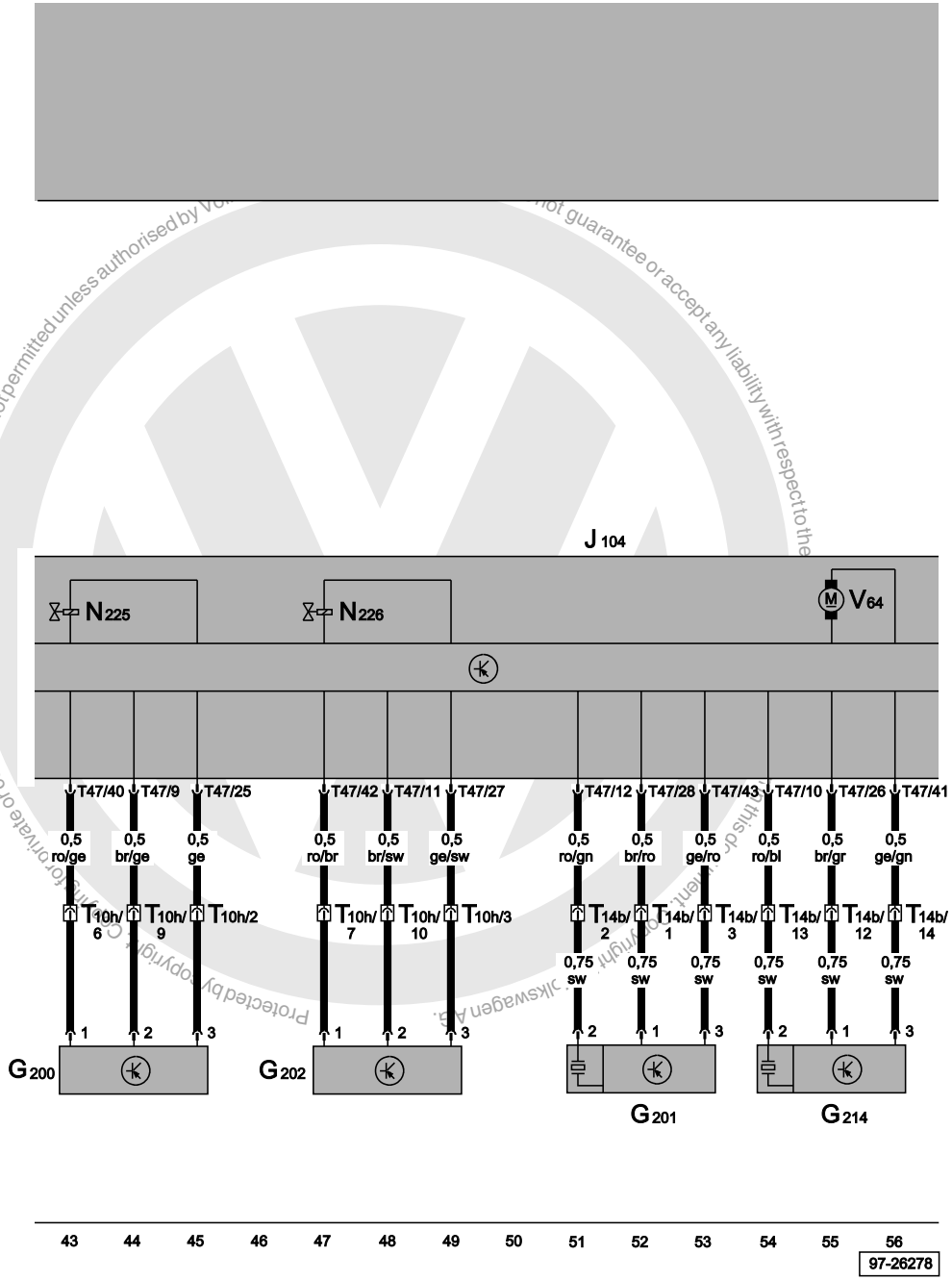

ABS/ABS with EDL/TCS/ESP control unit, lateral acceleration sender, brake pressure sender, yaw rate sender, ABS hydraulic pump

G200	Lateral acceleration sender, next to steering column
G201	Brake pressure sender 1, on brake master cylinder
G202	Yaw sender, next to steering column
G214	Brake pressure sender 2, on brake master cylinder
J104	ABS control unit with EDL/TCS/ESP, on left in engine compartment
N225	Vehicle stabilisation program switch valve 1
N226	Vehicle stabilisation program switch valve 2
T10h	10-pin connector, orange, near relay station
T14b	14-pin connector, on left in engine compartment
T47	47-pin connector
V64	ABS hydraulic pump

ws	=	white
sw	=	black
ro	=	red
br	=	brown
gn	=	green
bl	=	blue
gr	=	grey
li	=	purple
ge	=	yellow
or	=	orange
rs	=	pink

Protected by copyright. Copying for private or commercial purposes, in part or in whole, is not permitted unless authorised by Volkswagen AG. Volkswagen AG does not guarantee or accept any liability with respect to the content, accuracy, completeness and timeliness of this document.

satelettronica

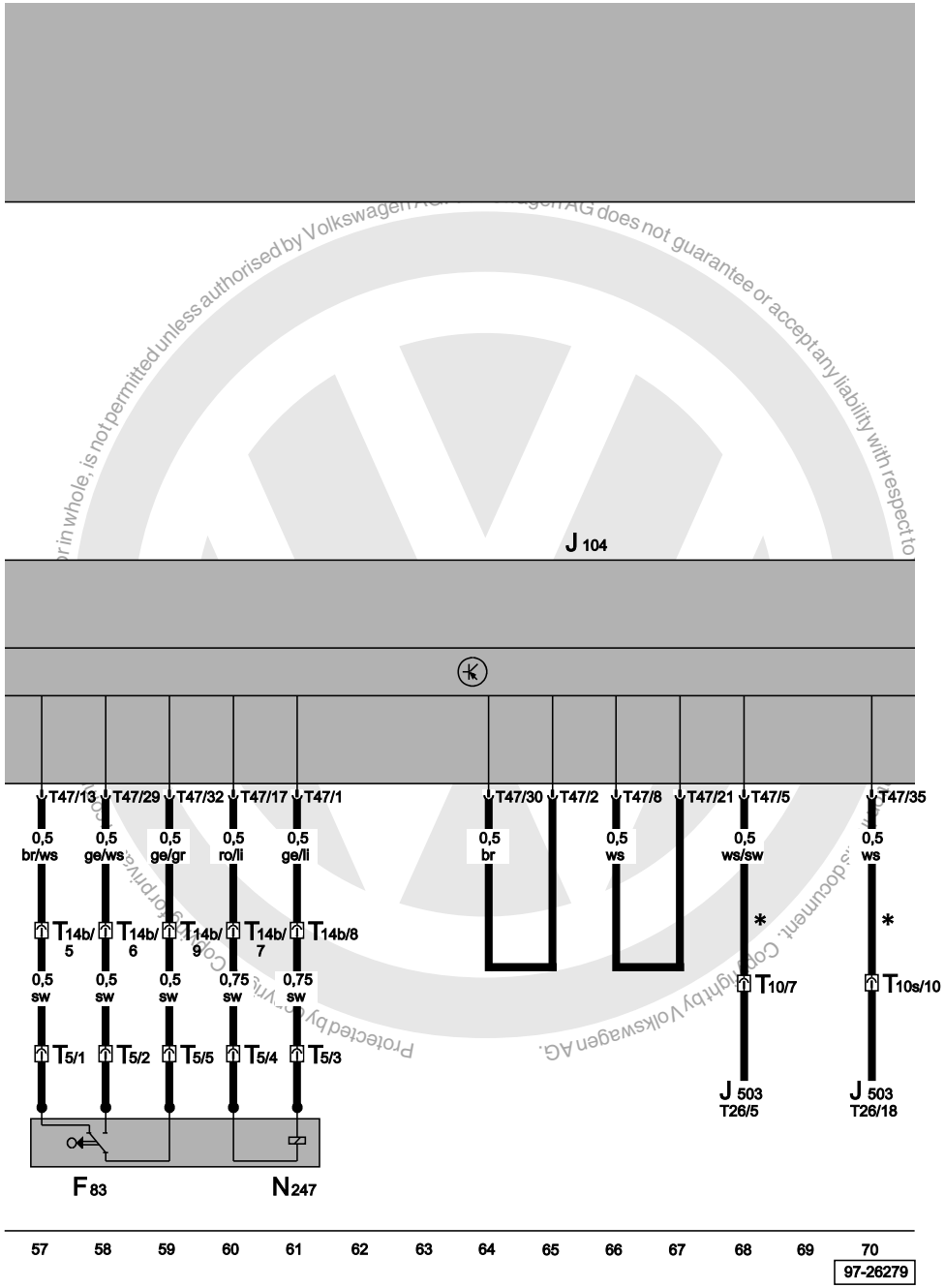

ABS control unit with EDL/TCS/ESP, longitudinal acceleration sender, brake pressure solenoid valve, ESP brake detection switch

F83	ESP brake detection switch
J104	ABS control unit with EDL/TCS/ESP, on left in engine compartment
J503	Control unit with display for radio and navigation system
N247	Brake pressure solenoid valve, in brake servo
T5	5-pin connector, in rear of engine compartment
T10	10-pin connector, white, near relay station
T10s	10-pin connector, light green, near relay station
T14b	14-pin connector, on left in engine compartment
T26	26-pin connector
T47	47-pin connector
*	Only models with navigation

ws	=	white
sw	=	black
ro	=	red
br	=	brown
gn	=	green
bl	=	blue
gr	=	grey
li	=	purple
ge	=	yellow
or	=	orange
rs	=	pink

satelettronica

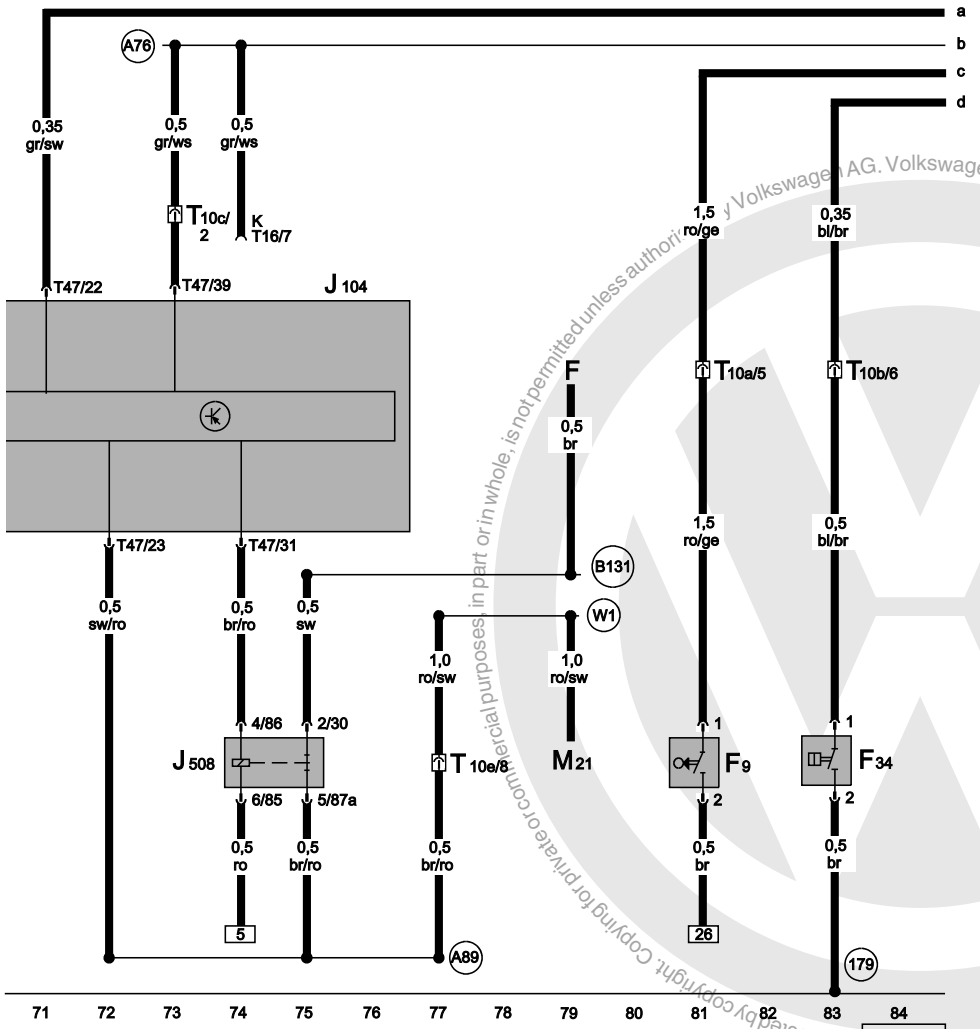

ABS control unit with EDL/TCS/ESP, handbrake warning switch, brake light suppression relay, brake fluid level warning contact

F	Brake light switch
F9	Handbrake warning switch
F34	Brake fluid level warning contact
J104	ABS control unit with EDL/TCS/ESP, on left in engine compartment
J508	Brake light suppression relay, on additional relay carrier above relay plate
M21	Left brake and tail light bulb
T10a	10-pin connector, green, near relay station
T10b	10-pin connector, black, near relay station
T10c	10-pin connector, blue, near relay station
T10e	10-pin connector, light pink, near relay station
T16	16-pin connector, self-diagnosis connection
T47	47-pin connector
179	Earth connection, in left headlight wiring harness
A76	Connection (K-diagnosis wire), in dash panel wiring harness
A89	Connection (54), in dash panel wiring harness
B131	Connection (54), in interior wiring harness
W1	Positive connection (54), in interior light wiring harness

ws	=	white
sw	=	black
ro	=	red
br	=	brown
gn	=	green
bl	=	blue
gr	=	grey
li	=	purple
ge	=	yellow
or	=	orange
rs	=	pink

Protected by copyright. Copying for private or commercial purposes, in part or in whole, is not permitted unless authorised by Volkswagen AG. Volkswagen AG does not guarantee or accept any liability with respect to the correctness of information in this document. Copyright by Volkswagen AG.

satelettronica

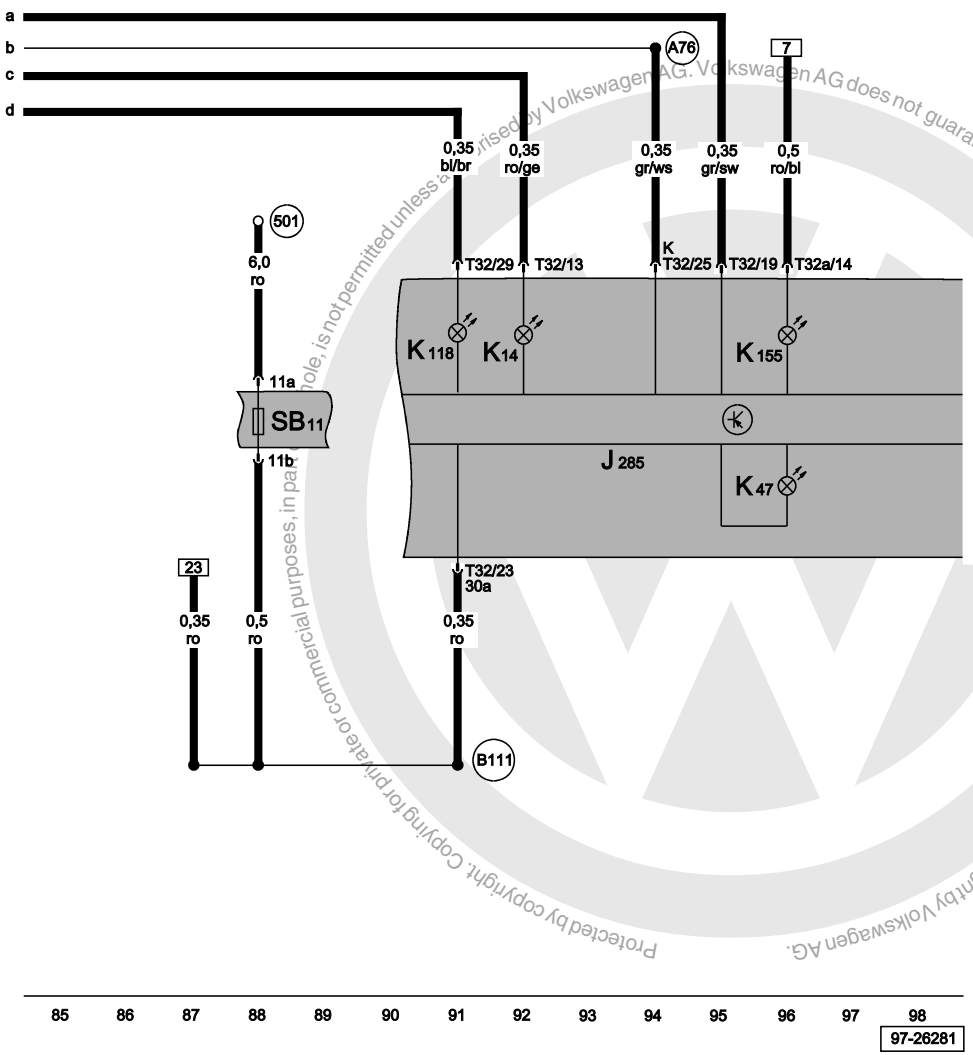

ws = white
sw = black
ro = red
br = brown
gn = green
bl = blue
gr = grey
li = purple
ge = yellow
or = orange
rs = pink

Control unit with display in dash panel insert, handbrake warning lamp, ABS warning lamp

J285	Control unit with display in dash panel insert
K14	Handbrake warning lamp
K47	ABS warning lamp
K118	Brake system warning lamp
K155	TCS and ESP warning lamp
SB11	Fuse 11 on fuse holder
T32	32-pin connector, blue
501	Screw connection 2 (30), on relay plate
A76	Connection (K-diagnosis wire), in dash panel wiring harness
B111	Positive connection 1 (30a), in interior wiring harness

Protected by copyright. Copying for private or commercial purposes, in part or whole, is not permitted unless authorised by Volkswagen AG. Volkswagen AG does not guarantee or accept any liability with respect to the correctness of information in this document. Copyright by Volkswagen AG.

satelettronica

Anti-lock brake system (ABS) with electronic differential lock (EDL)

⇒ **1.4 l/44 kW - Motronic, engine codes AUD, models with an automatic gearbox**
⇒ **1.4 l/55 kW - 4LV, engine code AUA, models with an automatic gearbox**
From May 1997

Notes:
For information concerning
- Relay and fuse assignment
- Multi-pin connectors
- Control units and relays
- Earth connections

⇒ Overview of Fitting Locations!
For information concerning
- Fault Finding Programs

⇒ Guided Fault Finding

Protected by copyright. Copying for private or commercial purposes, in part or in whole, is not permitted unless authorised by Volkswagen AG. Volkswagen AG does not guarantee or accept any liability with respect to the correctness of information in this document. Copyright by Volkswagen AG.

satelettronica

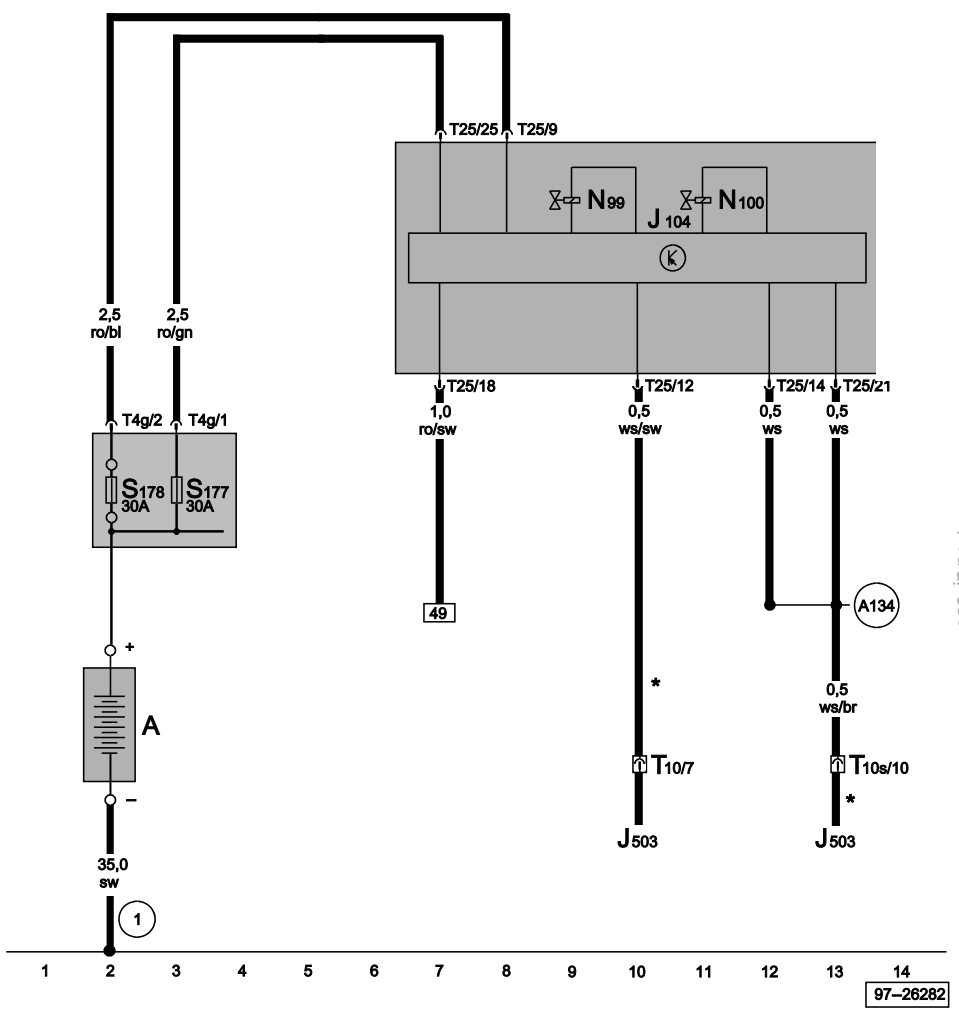

ABS control unit, fuses on battery fuse holder

A	Battery
J104	ABS control unit, on left in engine compartment
J503	Control unit with display for radio and navigation system
N99	Front right ABS inlet valve
N100	Front right ABS outlet valve
S177	Fuse 5 (30), on battery fuse holder
S178	Fuse 6 (30), on battery fuse holder
T4g	4-pin connector, black, near battery
T10	10-pin connector, white, near relay station
T10s	10-pin connector, light green, near relay station
T25	25-pin connector, black, on ABS control unit
1	Earth strap, battery - body
A134	Connection (right ABS impulse), in dash panel wiring harness
*	Only models with navigation

ws	=	white
sw	=	black
ro	=	red
br	=	brown
gn	=	green
bl	=	blue
gr	=	grey
li	=	purple
ge	=	yellow
or	=	orange
rs	=	pink

Protected by copyright. Copying for private or commercial purposes, in part or in whole, is not permitted unless authorised by Volkswagen AG. Volkswagen AG does not guarantee or accept any liability with respect to the correctness of information in this document. Copyright by Volkswagen AG.
satelettronica

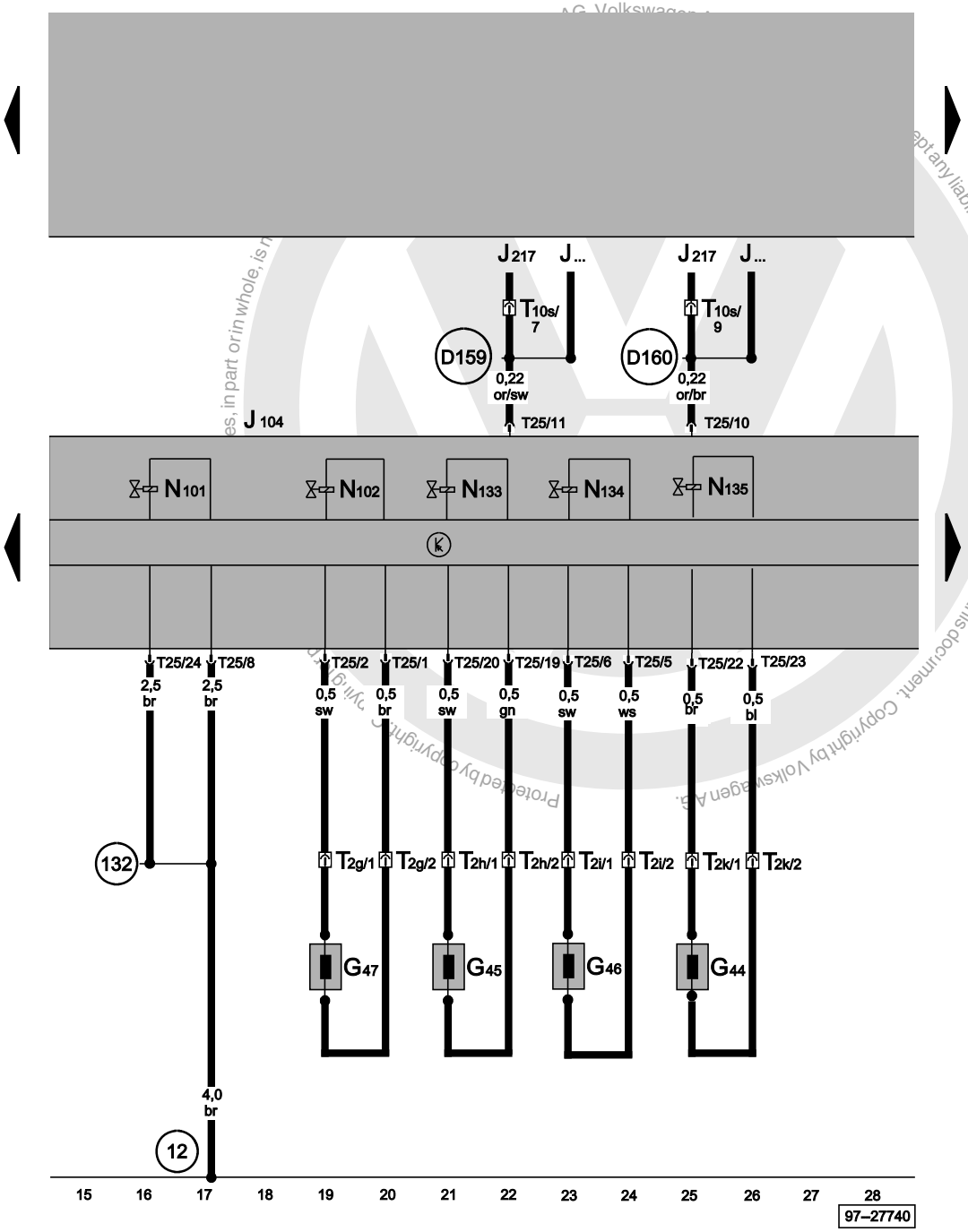

ABS control unit, inlet valves, outlet valves

G44	Rear right speed sensor
G45	Front right speed sensor
G46	Rear left speed sensor
G47	Front left speed sensor
J...	Engine control units
J104	ABS control unit, on left in engine compartment
J217	Automatic gearbox control unit, centre in plenum chamber
N101	Front left ABS inlet valve
N102	Front left ABS outlet valve
N133	Rear right ABS inlet valve
N134	Rear left ABS inlet valve
N135	Rear right ABS outlet valve
T2g	2-pin connector, black, behind left suspension strut
T2h	2-pin connector, black, behind right suspension strut
T2i	2-pin connector, black, under rear bench seat
T2k	2-pin connector, black, under rear bench seat
T10s	10-pin connector, light green, near relay station
T25	25-pin connector, black, on ABS control unit
12	Earth point, on left in engine compartment
132	Earth connection 3, in engine compartment wiring harness
D159	Connection (high bus), in engine compartment wiring harness
D160	Connection (low bus), in engine compartment wiring harness

ws	=	white
sw	=	black
ro	=	red
br	=	brown
gn	=	green
bl	=	blue
gr	=	grey
li = purple
ge = yellow
or = orange
rs = pink

satelettronica

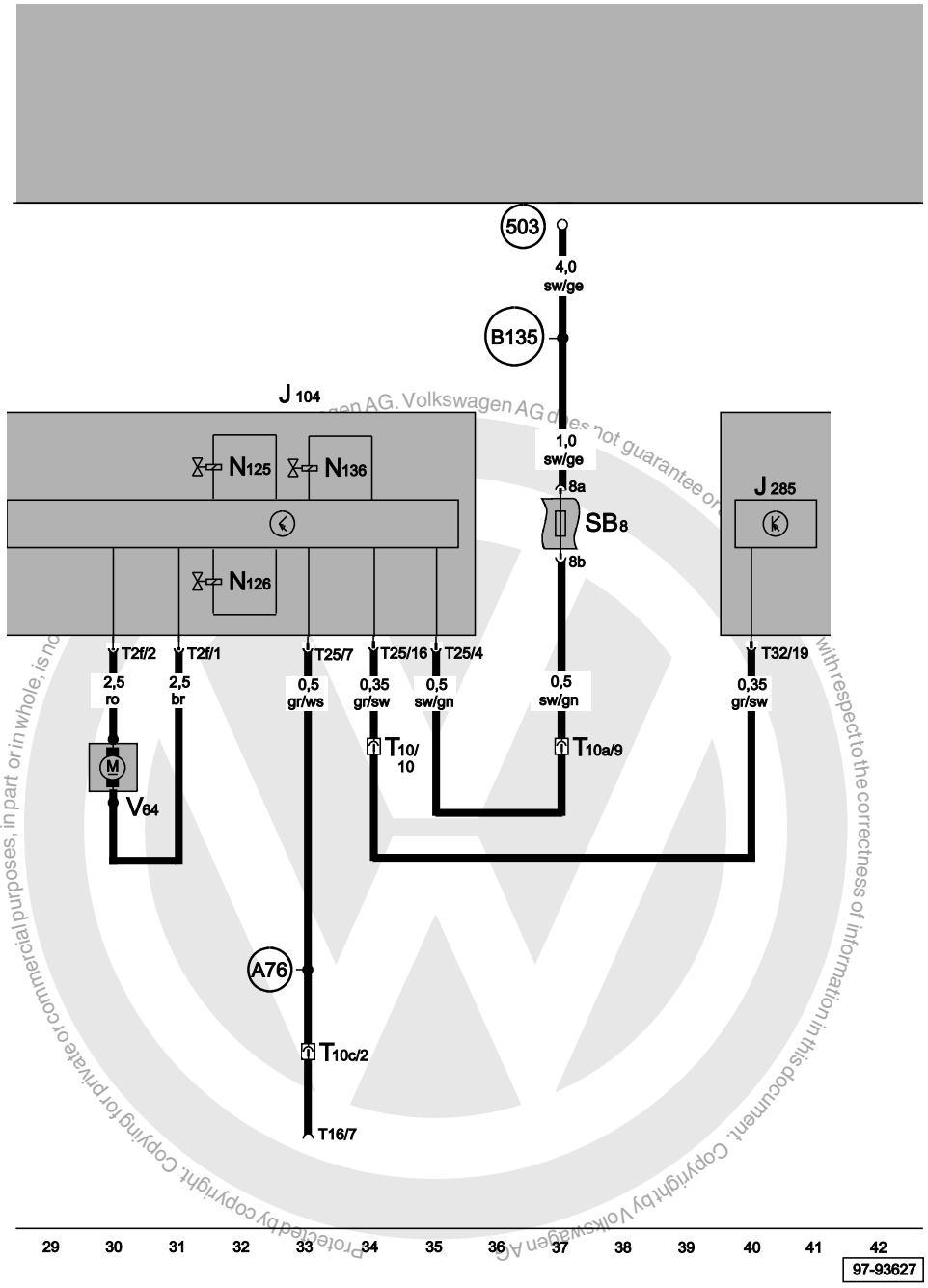

ABS control unit, inlet valves, dash panel insert, self-diagnosis connection, differential lock valves 1 and 2

J104	ABS control unit, on left in engine compartment
J285	Control unit with display in dash panel insert
N125	Differential lock valve 1
N126	Differential lock valve 2
N136	Rear left ABS outlet valve
SB8	Fuse 8 in relay plate fuse holder
T2f	2-pin connector, black, on ABS control unit
T10	10-pin connector, white, near relay station
T10a	10-pin connector, green, near relay station
T10c	10-pin connector, blue, near relay station
T16	16-pin connector, self-diagnosis connection
T25	25-pin connector, black, on ABS control unit
V64	ABS hydraulic pump, on ABS control unit
T32	32-pin connector, blue, on dash panel insert
503	Screw connection (75x), on relay plate
A76	Connection (K-diagnosis wire), in dash panel wiring harness
B135	Connection 1 (15a), in interior wiring harness

ws	=	white
sw	=	black
ro	=	red
br	=	brown
gn	=	green
bl	=	blue
gr	=	grey
li	=	purple
ge	=	yellow
or	=	orange
rs	=	pink

satelettronica

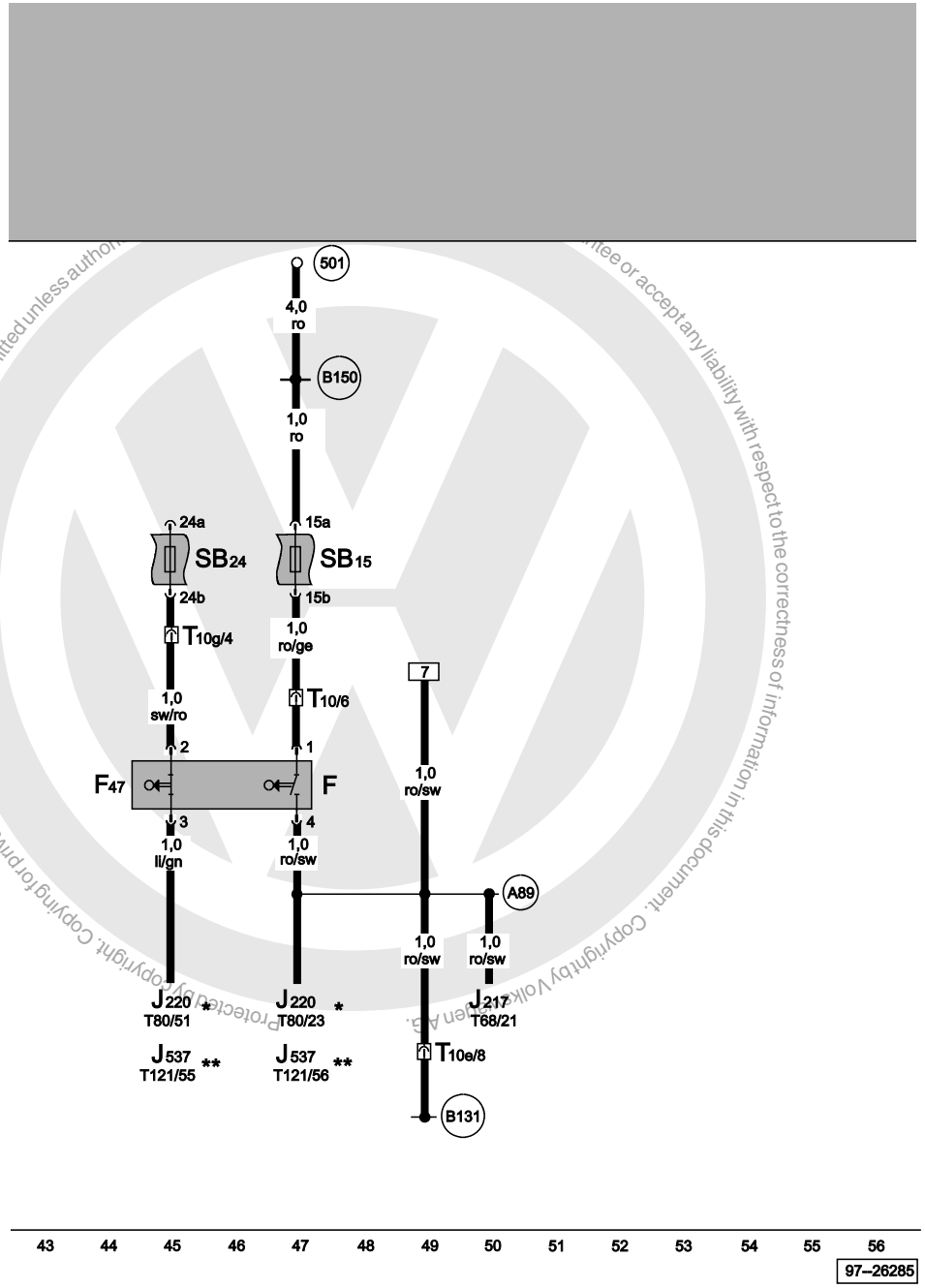

Brake light switch

F	Brake light switch
F47	Brake pedal switch
J217	Automatic gearbox control unit, centre in plenum chamber
J220	Motronic control unit
J537	4LV injection system control unit
SB15	Fuse 15 on fuse holder
SB24	Fuse 24 on fuse holder
T10	10-pin connector, white, near relay station
T10e	10-pin connector, light pink, near relay station
T10g	10-pin connector, brown, near relay station
T80	80-pin connector
T121	121-pin connector
501	Screw connection 2 (30), on relay plate
A89	Connection 2 (54), in dash panel wiring harness
B131	Connection (54), in interior wiring harness
B150	Positive connection 2 (30a), in interior wiring harness
*	Only engine code ANW
**	Only engine code AUA

ws	=	white
sw	=	black
ro	=	red
br	=	brown
gn	=	green
bl	=	blue
gr	=	grey
li	=	purple
ge	=	yellow
or	=	orange
rs	=	pink

satelettronica

Protected by copyright. Copying for private or commercial purposes, in part or in whole, is not permitted unless authorised by Volkswagen AG. Volkswagen AG does not guarantee or accept any liability with respect to the correctness of information in this document. Copyright by Volkswagen AG.

Airbag system

⇒ Driver`s and front passenger`s airbag
⇒ Seat belt tensioner
⇒ Side airbags

From October 1999

For alternatives to relay and fuse positions as well as multi-pin connector wiring - see "Fitting locations" section.

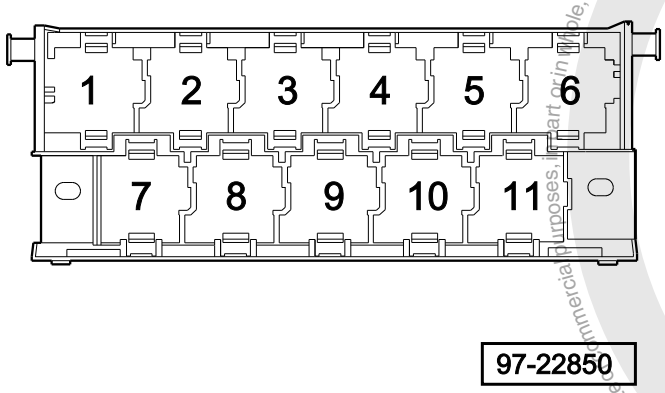

Fuse colours

30 A - green
25 A - white
20 A - yellow
15 A - blue
10 A - red
7.5 A - brown
5 A - beige
3 A - lilac

satelettronica

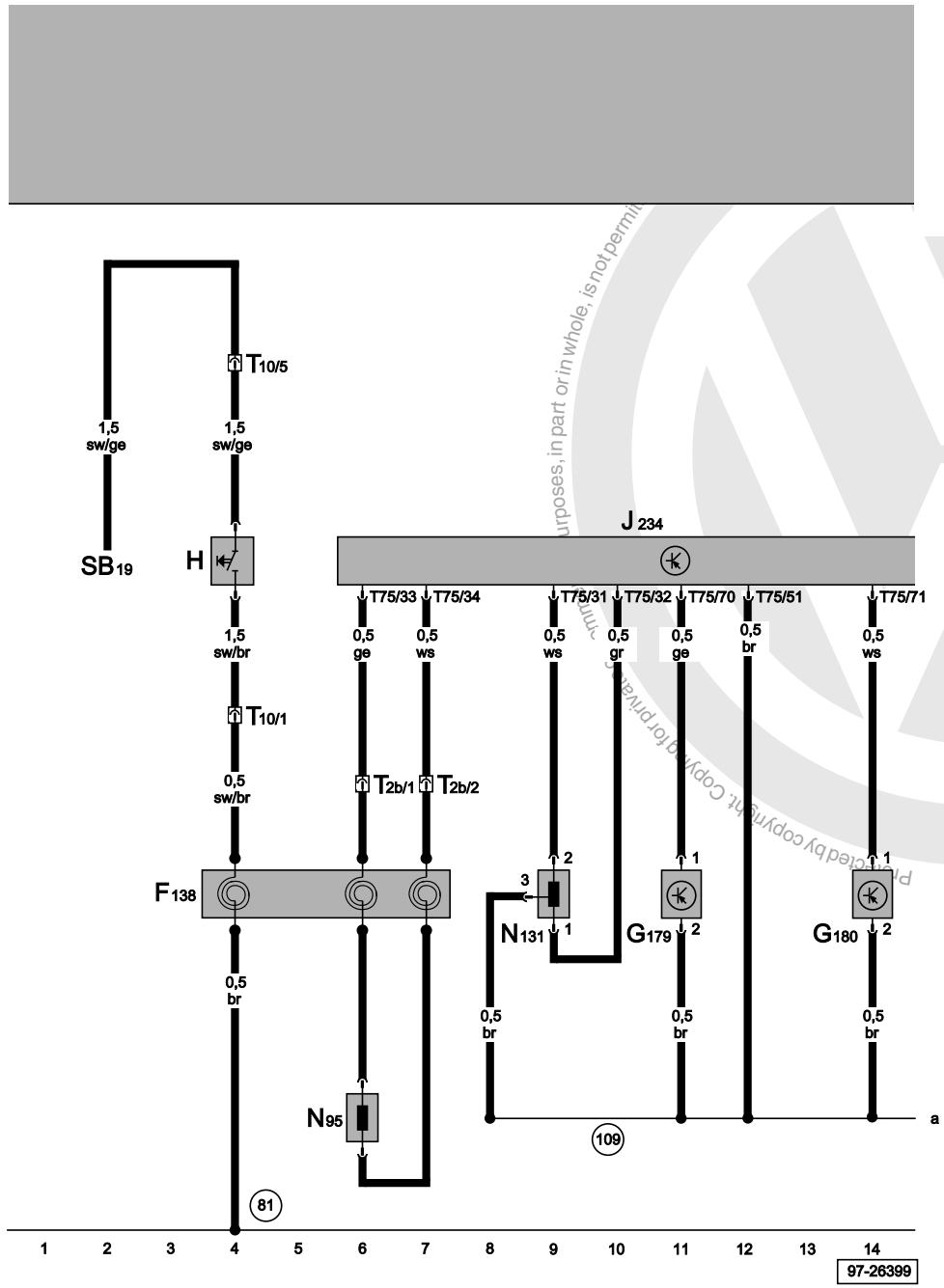

Airbag control unit, airbag coil connector, front airbag igniter, side airbag crash sensors

F138	Coil spring for airbag
G179	Side airbag crash sensor, driver`s side
G180	Side airbag crash sensor, front passenger`s side
H	Horn plate
J234	Airbag control unit, behind lower console
N95	Airbag igniter, driver side
N131	Airbag igniter 1, front passenger side
SB19	Fuse -19- on fuse holder
T2b	2-pin connector, next to steering column
T10	10-pin connector, white, coupling station below relay carrier
T75	75-pin connector
81	Earth connection -1-, in dash panel wiring harness
109	Earth connection, in airbag wiring harness

ws	=	white
sw	=	black
ro	=	red
br	=	brown
gn	=	green
bl	=	blue
gr	=	grey
li	=	purple
ge	=	yellow
or	=	orange
rs	=	pink

Volkswagen AG does not guarantee or accept any liability with respect to the correctness of information in this document. Copyright by Volkswagen AG. Protected by copyright. Copying for private or commercial purposes, in part or in whole, is not permitted.
satelettronica

Airbag control unit, side airbag igniter, belt tensioner igniter

J234	Airbag control unit, behind lower console
N153	Belt tensioner igniter, driver's side
N154	Belt tensioner igniter, front passenger's side
N199	Side airbag igniter, driver's side
N200	Side airbag igniter, front passenger's side
T2	2-pin connector, under driver's seat
T2a	2-pin connector, under driver's seat
T3	3-pin connector, under driver's seat
T3a	3-pin connector, under front passenger's seat
T75	75-pin connector
34	Earth point, on driver's seat
35	Earth point, on front passenger's seat
109	Earth connection, in airbag wiring harness
135	Earth connection -2-, in dash panel wiring harness
*	Wire to prevent static charging of seat

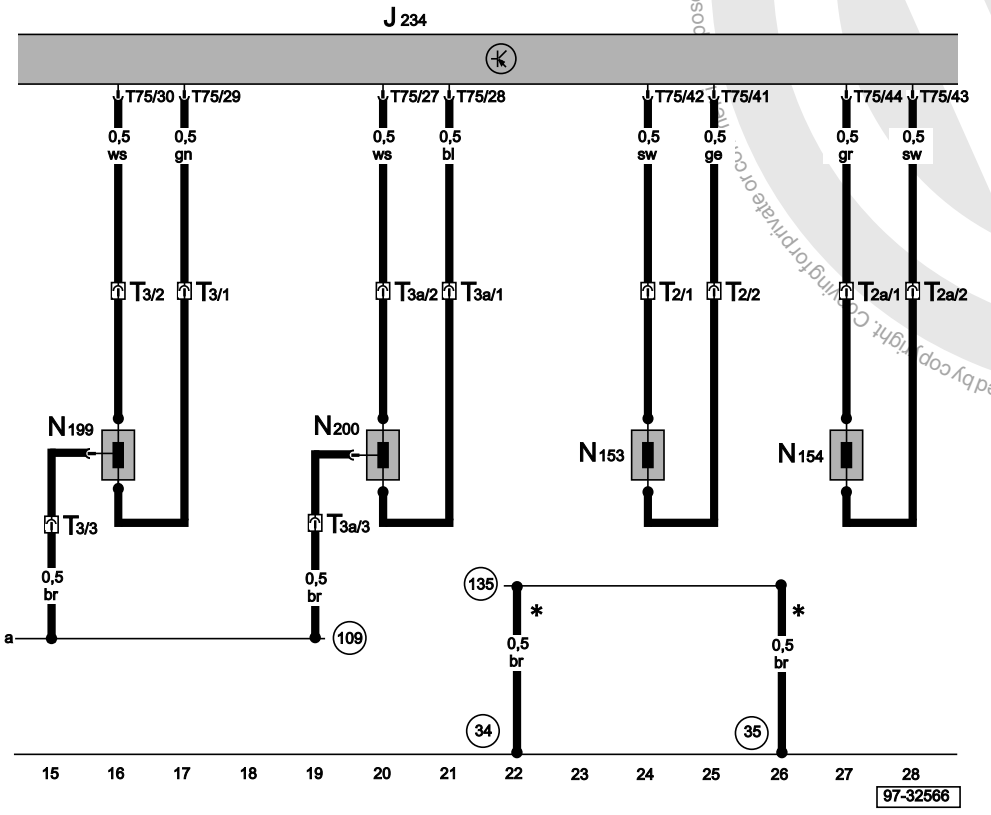

ws	=	white
sw	=	black
ro	=	red
br	=	brown
gn	=	green
bl	=	blue
gr	=	grey
li	=	purple
ge	=	yellow
or	=	orange
rs	=	pink

Protected by copyright. Copying for private or commercial purposes, in part or in whole, is not permitted unless authorised by Volkswagen AG. Volkswagen AG does not guarantee or accept any liability with respect to the correctness of information in this document. Copyright by Volkswagen AG.
satelettronica

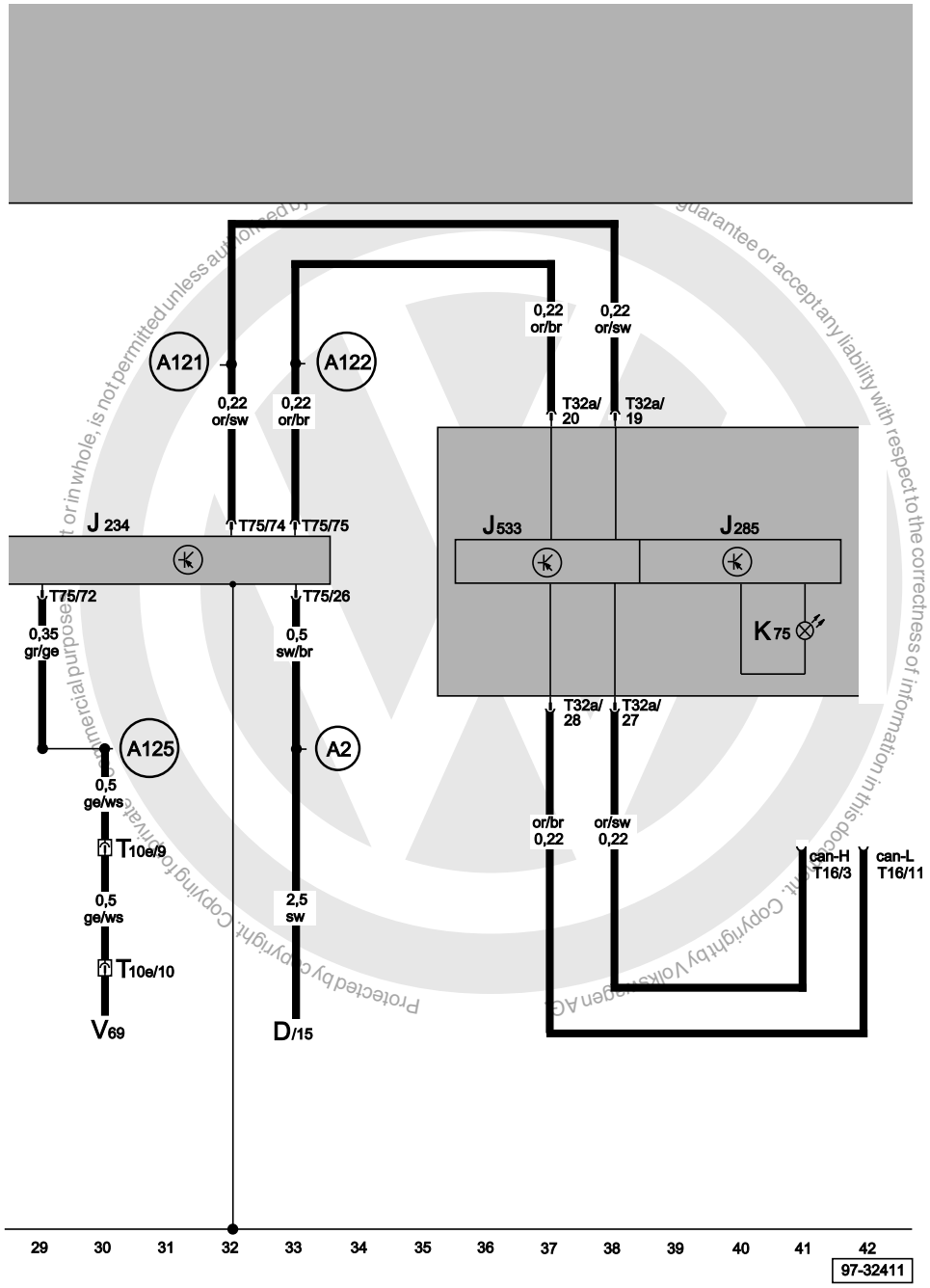

Airbag control unit, airbag warning lamp, self-diagnosis connection, data bus diagnostic interface, control unit with display in dash panel insert

D	Ignition/starter switch
J234	Airbag control unit, behind lower console
J285	Control unit with display in dash panel insert
J533	Data bus diagnostic interface control unit
K75	Airbag warning lamp, in dash panel insert
T10e	10-pin connector, light pink, connector point under relay carrier
T16	16-pin connector, self-diagnosis connection
T32a	32-pin connector, green
T75	75-pin connector
V69	Central locking pump with control unit
A2	Positive (+) connection (15), in dash panel wiring harness
A125	Connection (crash signal), in dash panel wiring harness
A121	Connection (high bus), in dash panel wiring harness
A122	Connection (low bus), in dash panel wiring harness

ws	=	white
sw	=	black
ro	=	red
br	=	brown
gn	=	green
bl	=	blue
gr	=	grey
li	=	purple
ge	=	yellow
or	=	orange
rs	=	pink

satelettronica

Automatic gearbox

⇒ 1.4 l/44 kW Motronic, engine codes AUD, AKK, AKP
⇒ 1.4 l/55 kW - 4LV, engine codes AUA, APE
⇒ 1.6 l/92 kW Simos, engine codes ARC
From October 1999

For alternatives to relay and fuse positions as well as multi-pin connector wiring - see "Fitting locations" section.

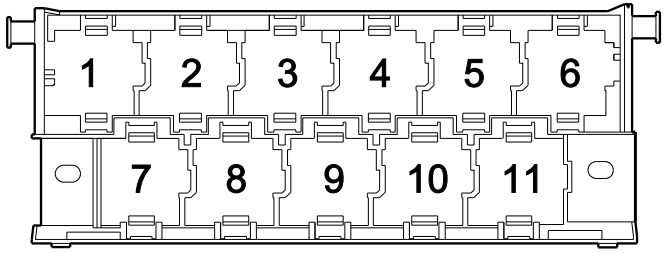

97-22850

Fuse colours

30 A - green
25 A - white
20 A - yellow
15 A - blue
10 A - red
7.5 A - brown
5 A - beige
3 A - purple

Protected by copyright. Copying for private or commercial purposes, in part or in whole, is not permitted unless authorised by Volkswagen AG. Volkswagen AG does not guarantee or accept any liability with respect to the correctness of information in this document. Copyright by Volkswagen AG.
satelettronica

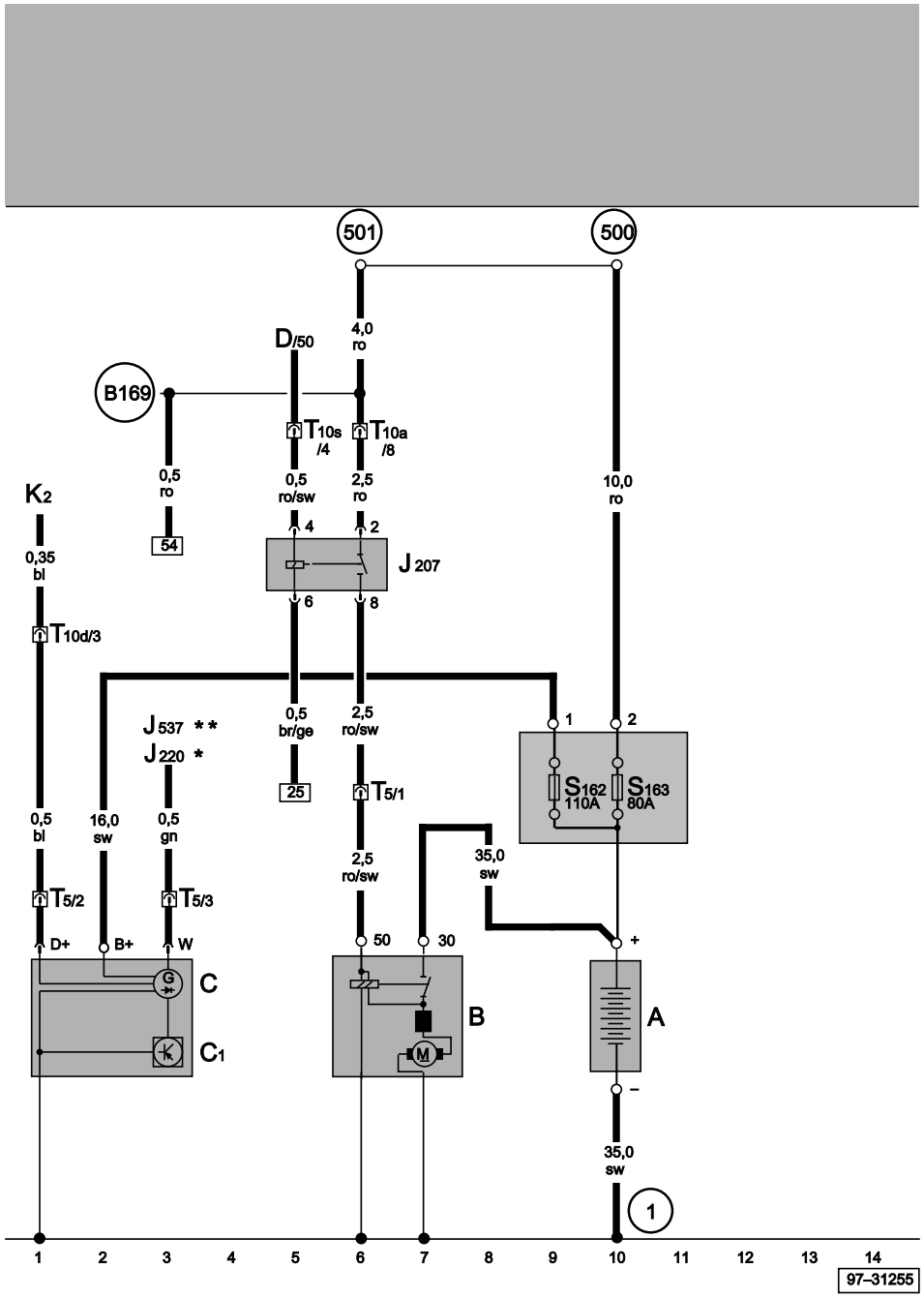

Battery, starter, alternator, voltage regulator, radiator fan, starter inhibitor relay

A	Battery
B	Starter
C	Alternator
C1	Voltage regulator
D	Ignition/starter switch
J207	Starter inhibitor relay
J220	Motronic control unit
J537	4LV control unit (injection system)
K2	Alternator warning lamp
S162	Fuse -1- (30), in fuse box
S163	Fuse -2- (30), in fuse box
T5	5-pin connector
T10a	10-pin connector, green, connector point under relay carrier
T10d	10-pin connector, red, connector point under relay carrier
T10s	10-pin connector, light green, connector point under relay carrier
1	Earth strap, battery - body
500	Screw connection -1- (30), on relay plate
501	Screw connection -2- (30), on relay plate
B169	Positive (+) connection -1- (30), in interior wiring harness
*	Only engine codes AUD, AKK, AKP (T80/11)
**	Only engine codes ARC (T121/13) and APE, AUA (T121/28)

ws	=	white
sw	=	black
ro	=	red
br	=	brown
gn	=	green
bl	=	blue
gr	=	grey
li	=	purple
ge	=	yellow
or	=	orange
rs	=	pink

Protected by copyright. Copyright by Volkswagen AG. Volkswagen AG does not guarantee or accept any liability with respect to the correctness of information in this document. Copyright by Volkswagen AG. Volkswagen AG, is not permitted unless authorised by Volkswagen AG. Volkswagen AG does not guarantee or accept any liability with respect to the correctness of information in this document. Copyright by Volkswagen AG.
satelettronica

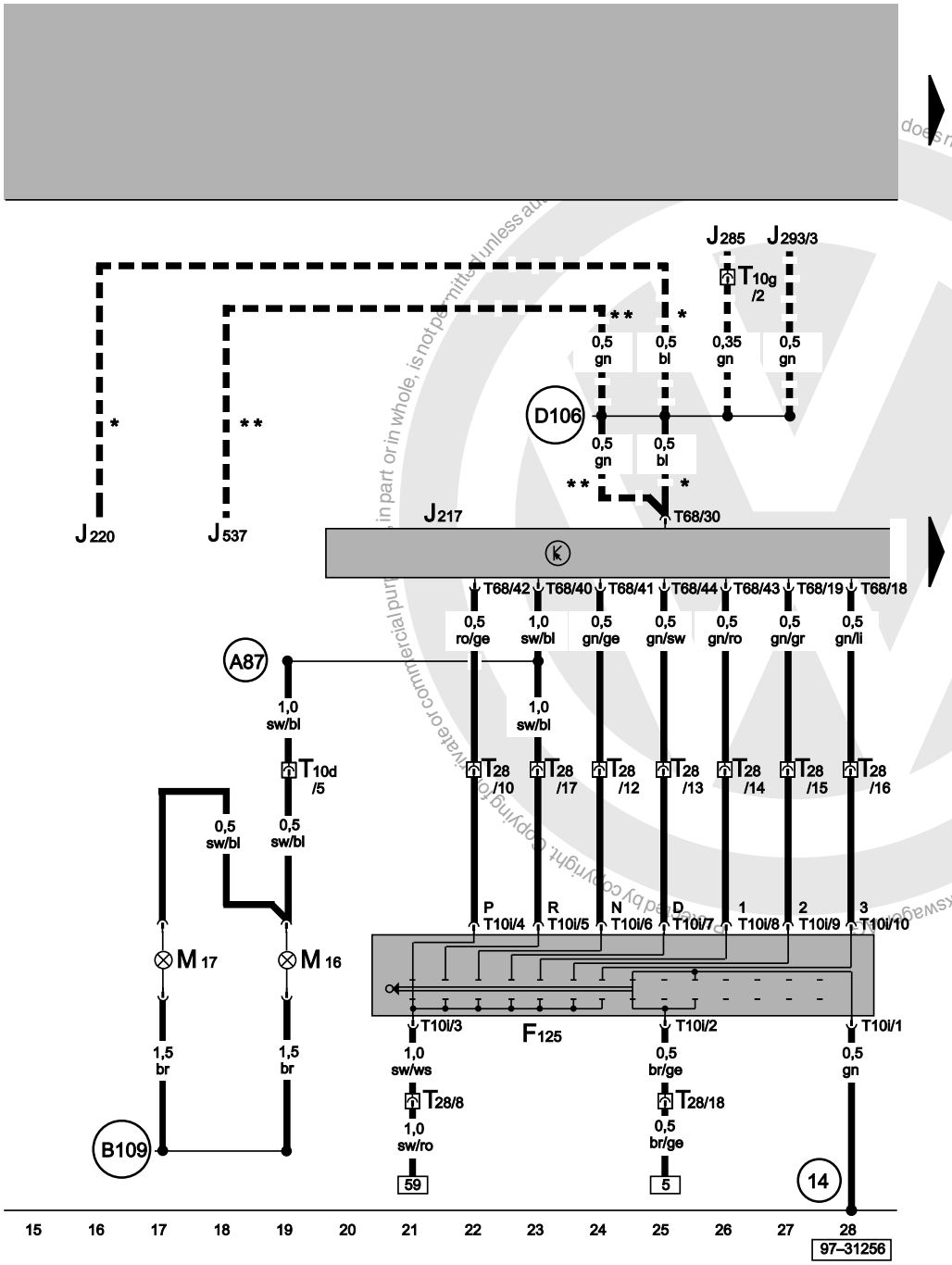

Motronic control unit, automatic gearbox control unit, multi-function switch, reversing light bulb, right, reversing light bulb, left

F125	Multi-function switch
J217	Automatic gearbox control unit, in plenum chamber
J220	Motronic control unit
J285	Control unit with display in dash panel insert
J293	Radiator fan control unit
J537	4LV control unit (injection system)
M16	Reversing light bulb, left
M17	Reversing light bulb, right
T10d	10-pin connector, red, near relay station
T10g	10-pin connector, brown, connector point under relay carrier
T10i	10-pin connector, black
T28	28-pin connector, on gearbox
T68	68-pin connector, black
14	Earth point, on gearbox
A87	Connection (RF (reversing light)), in dash panel wiring harness
B109	Earth connection, in interior wiring harness, rear left
D106	Connection -4-, in engine compartment wiring harness
---	Only models with air conditioner
*	Only engine codes AHW (T80/8) and AUD, AKK, AKP (T80/42)
**	Only engine codes ARC (T121/76) and AUA, APE (T121/41)

ws	=	white
sw	=	black
ro	=	red
br	=	brown
gn	=	green
bl	=	blue
gr	=	grey
li	=	purple
ge	=	yellow
or	=	orange
rs	=	pink

satelettronica

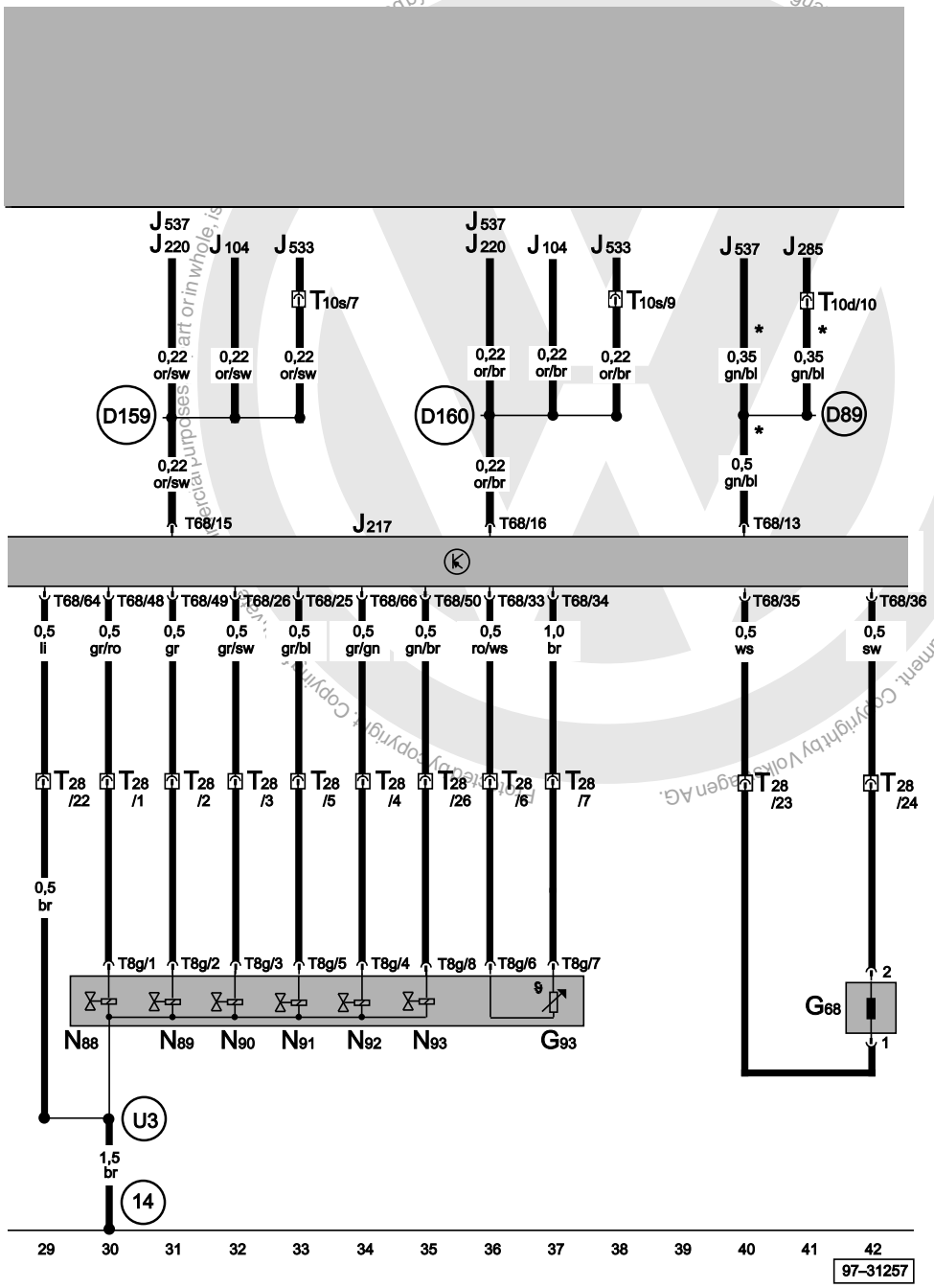

Automatic gearbox control unit, solenoid valves, vehicle speed sender

G68	Vehicle speed sender
G93	Gearbox oil temperature sender
J104	ABS with EDL control unit
J217	Automatic gearbox control unit
J220	Motronic control unit
J285	Control unit with display in dash panel insert
J533	Data bus diagnostic interface control unit
J537	4LV control unit (injection system)
N88	Solenoid valve 1
N89	Solenoid valve 2
N90	Solenoid valve 3
N91	Solenoid valve 4
N92	Solenoid valve 5
N93	Solenoid valve 6
T8g	8-pin connector, black
T10d	10-pin connector, red
T10s	10-pin connector, light green
T28	28-pin connector, black
T68	68-pin connector, black
14	Earth point, on gearbox
D89	Connection (Control units), in engine compartment wiring harness
D159	Connection (high bus), in engine compartment wiring harness
D160	Connection (low bus), in engine compartment wiring harness
U3	Connection -1-, in automatic gearbox wiring harness
*	Only engine codes AUA, APE

ws	=	white
sw	=	black
ro	=	red
br	=	brown
gn	=	green
bl	=	blue
gr	=	grey
li	=	purple
ge	=	yellow
or	=	orange
rs	=	pink

satelettronica

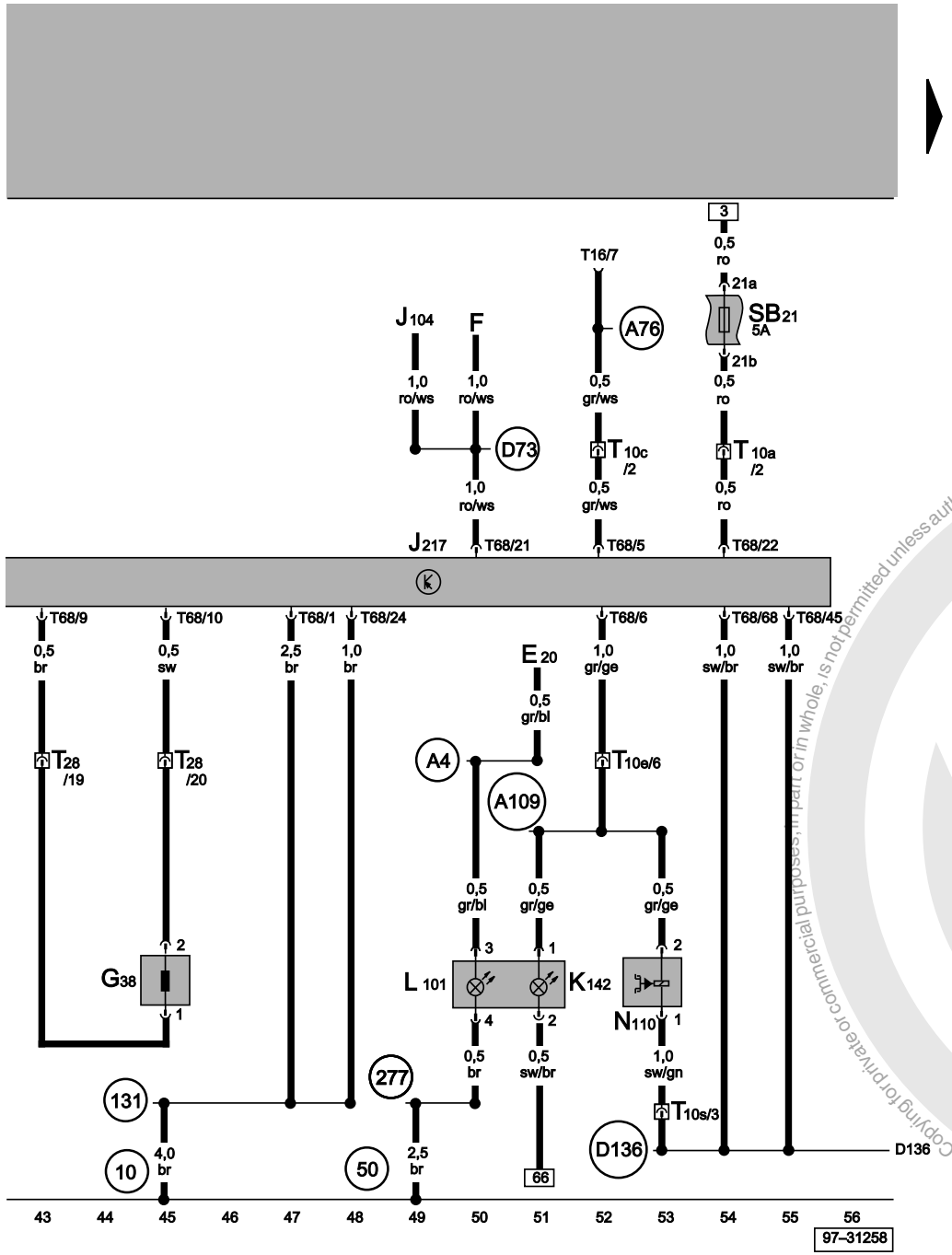

Automatic gearbox control unit, gearbox speed sender, selector lever lock solenoid, self-diagnosis connection

E20	Switches and instruments
F	Brake light switch
G38	Gearbox speed sender
J104	ABS control unit, in engine compartment, left
J217	Automatic gearbox control unit
K142	Selector lever position P/N warning lamp
L101	Selector lever display illumination
N110	Selector lever lock solenoid
SB21	Fuse -21- in fuse box
T10a	10-pin connector, green
T10c	10-pin connector, blue
T10e	10-pin connector, light pink
T10s	10-pin connector, light green
T16	16-pin connector, self-diagnosis connection
T28	28-pin connector, black
T68	68-pin connector, black
10	Earth point, in plenum chamber
50	Earth point, on left luggage compartment
131	Earth connection -2-, in engine compartment wiring harness
277	Earth connection -3-, in interior wiring harness
A4	Positive (+) connection (58b), in dash panel wiring harness
A76	Connection (diagnosis wire K), in dash panel wiring harness
A109	Connection (selector lever function display), in dash panel wiring harness
D73	Positive (+) connection (54), in engine compartment wiring harness
D136	Positive (+) connection -2- (15a), in engine compartment wiring harness

ws	=	white
sw	=	black
ro	=	red
br	=	brown
gn	=	green
bl	=	blue
gr	=	grey
li	=	purple
ge	=	yellow
or	=	orange
rs	=	pink

Protected by copyright. Copying for private or commercial purposes, in part or in whole, is not permitted unless authorised by Volkswagen AG. Volkswagen AG does not guarantee or accept any liability with respect to the correctness of information in this document. Copyright by Volkswagen AG.
satelettronica

Selector lever illumination, fuse for selector lever position P/N warning lamp, fuse for selector lever lock solenoid, fuse for multi-function switch

D	Ignition/starter switch
SB25	Fuse -25- in fuse box
SB29	Fuse -29- in fuse box
SB33	Fuse -33- in fuse box
T10s	10-pin connector, light green
B163	Positive (+) connection -1- (15), in interior wiring harness
B165	Positive (+) connection -2- (15), in interior wiring harness
D52	Positive (+) connection (15a), in engine compartment wiring harness
D136	Positive (+) connection -2- (15a), in engine compartment wiring harness

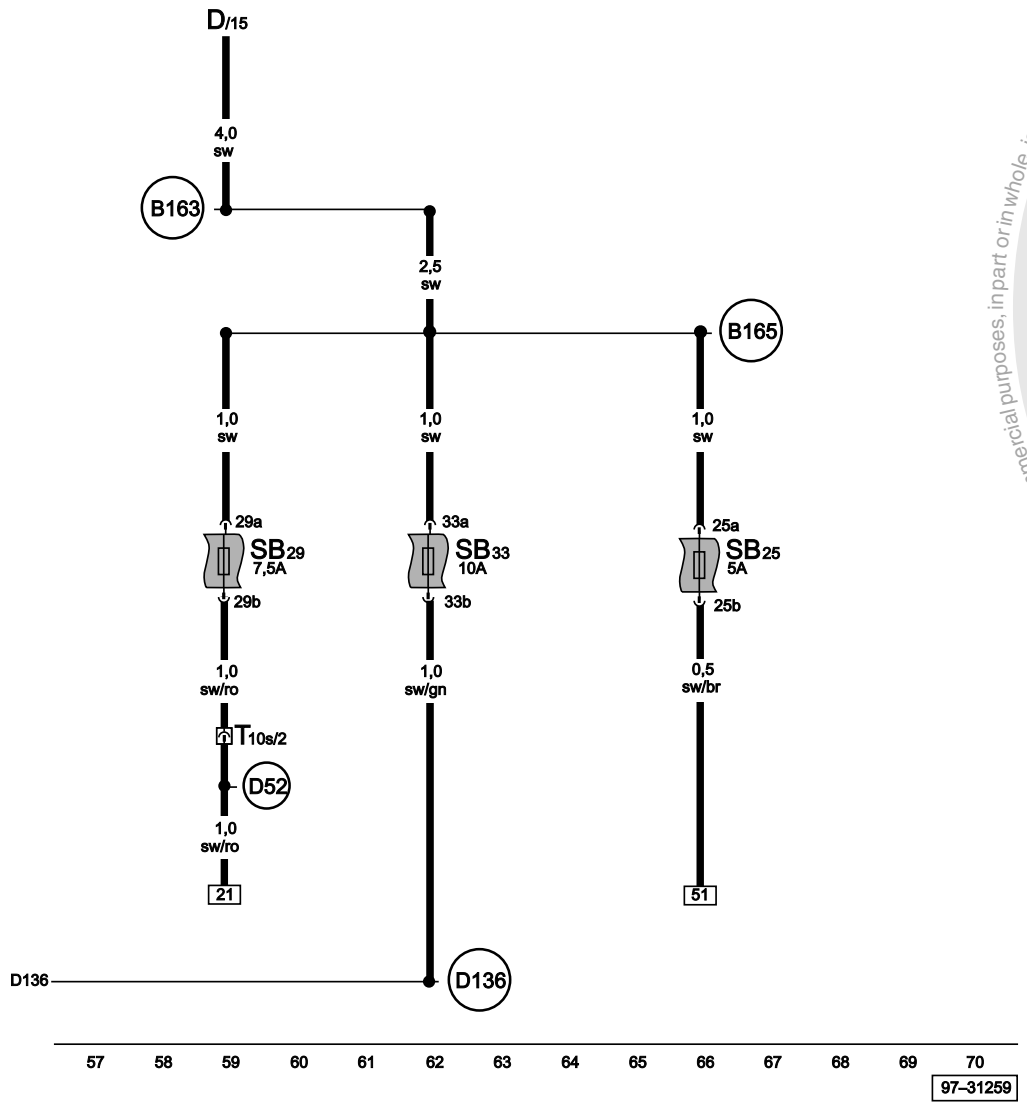

ws	=	white
sw	=	black
ro	=	red
br	=	brown
gn	=	green
bl	=	blue
gr	=	grey
li	=	purple
ge	=	yellow
or	=	orange
rs	=	pink

Protected by copyright. Copying for private or commercial purposes, in part or in whole, is not permitted unless authorised by Volkswagen AG. Volkswagen AG does not guarantee or accept any liability with respect to the correctness of information in this document. Copyright by Volkswagen AG.
satelettronica

Gas discharge headlight, automatic headlight range control

From October 1999

Notes:

For information concerning

- Relay and fuse assignment
- Multi-pin connectors
- Control units and relays
- Earth connections

⇒ Overview of Fitting Locations!

For information concerning

- Fault Finding Programs

⇒ Guided Fault Finding

Protected by copyright. Copying for private or commercial purposes, in part or in whole, is not permitted unless authorised by Volkswagen AG. Volkswagen AG does not guarantee or accept any liability with respect to the correctness of information in this document. Copyright by Volkswagen AG.

satelettronica

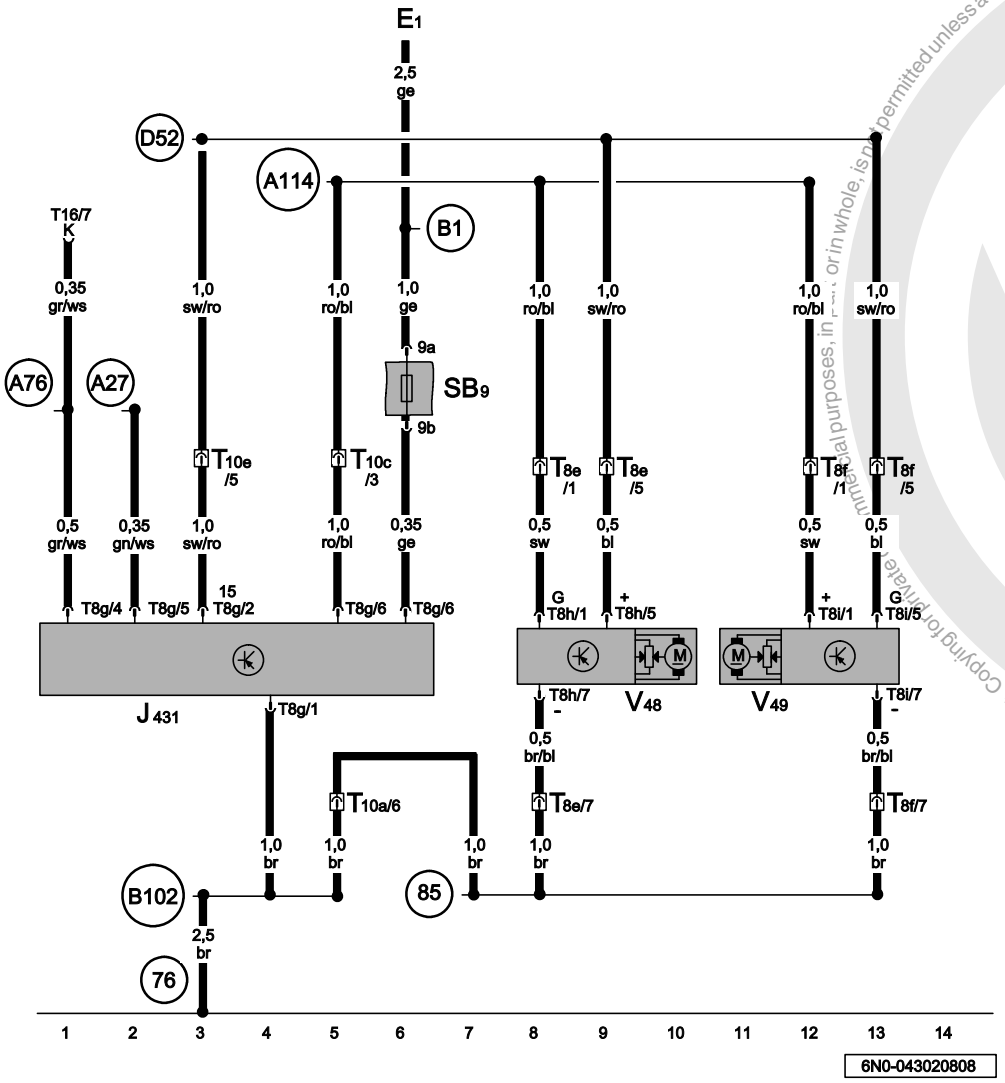

Headlight range control unit, right headlight range control motor, left headlight range control motor, self-diagnosis connection

E1	Light switch
J431	Headlight range control unit, on left in luggage compartment
SB9	Fuse 9 in relay plate fuse holder
T8e	8-pin connector, black, near left headlight
T8f	8-pin connector, black, near left headlight
T8g	8-pin connector
T8h	8-pin connector, adapter wiring on left headlight
T8i	8-pin connector, adapter wiring on right headlight
T10a	10-pin connector, green
T10c	10-pin connector, blue
T10e	10-pin connector, pink
T16	16-pin connector
V48	Left headlight range control motor
V49	Right headlight range control motor
76	Earth point, near selector mechanism
85	Earth connection 1, in engine compartment wiring harness
A27	Connection (speed signal), in dash panel wiring harness
A76	Connection (K-diagnosis wire), in dash panel wiring harness
A114	Connection (headlight range control), in dash panel wiring harness
B1	Connection (56b), in steering column switch wiring harness
B102	Earth connection, in front left interior wiring harness
D52	Positive connection (15a), in engine compartment wiring harness

ws	=	white
sw	=	black
ro	=	red
br	=	brown
gn	=	green
bl	=	blue
gr	=	grey
li	=	purple
ge	=	yellow
or	=	orange
rs	=	pink

Protected by copyright. Copying for private or commercial purposes, in part or in whole, is not permitted unless authorised by Volkswagen AG. Volkswagen AG does not guarantee or accept any liability with respect to the correctness of information in this document. Copyright by Volkswagen AG.

satelettronica

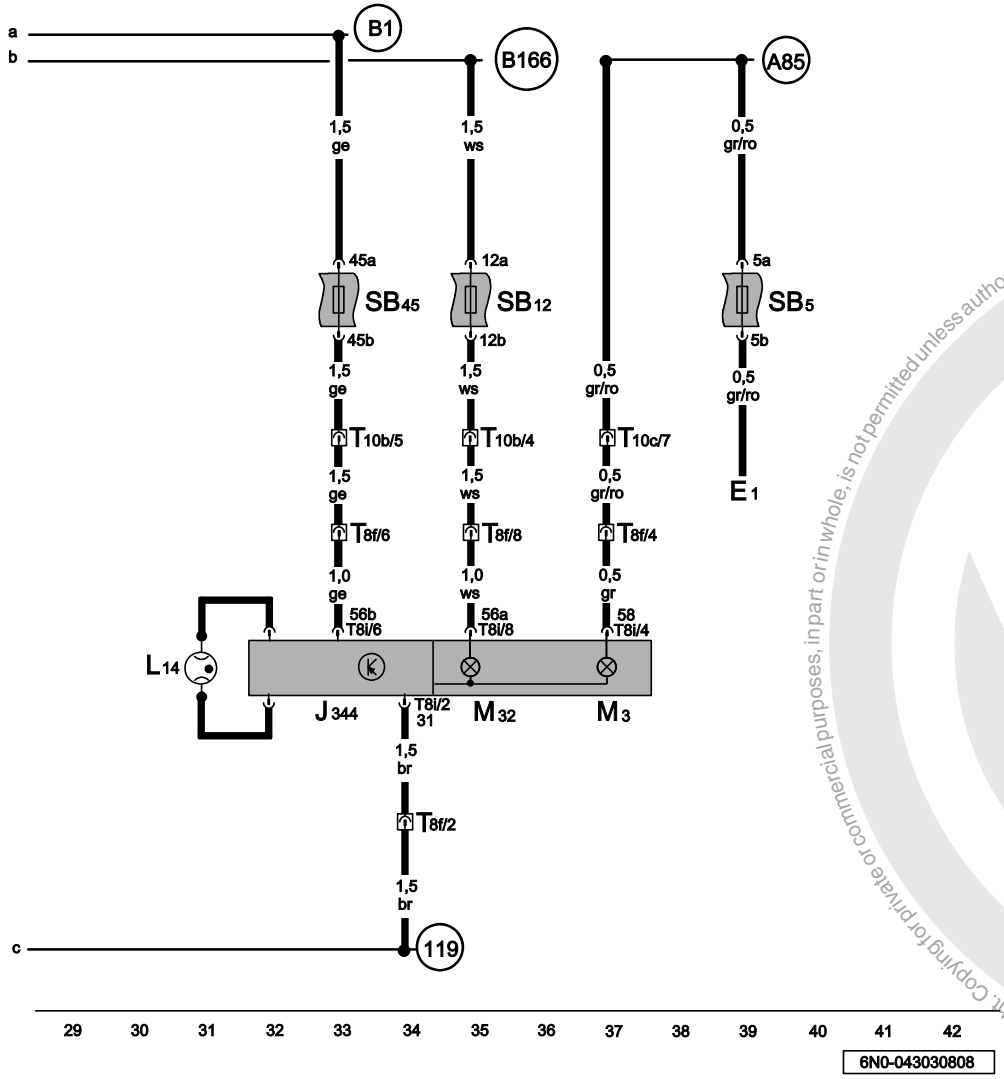

Left gas discharge light control unit, left gas discharge light, left headlight

E1	Light switch
E4	Headlight dipper and flasher switch
J343	Left gas discharge bulb control unit
L13	Left gas discharge (xenon) bulb
M1	Left side light bulb
M30	Left headlight main beam bulb
SB4	Fuse 4 in relay plate fuse holder
SB13	Fuse 13 in relay plate fuse holder
SB44	Fuse 44 in relay plate fuse holder
T8e	8-pin connector, black, near left headlight
T8h	8-pin connector, adapter wiring on left headlight
T10c	10-pin connector, blue, coupling station under relay carrier
T10d	10-pin connector, red, coupling station under relay carrier
12	Earth point, on left in engine compartment
119	Earth connection 1, in headlight wiring harness
A84	Connection (58L), in dash panel wiring harness
B1	Connection (56b), in steering column switch wiring harness
B144	Positive connection (58L), in interior wiring harness
B166	Connection (56a), in interior wiring harness

ws	=	white
sw	=	black
ro	=	red
br	=	brown
gn	=	green
bl	=	blue
gr	=	grey
li	=	purple
ge	=	yellow
or	=	orange
rs	=	pink

Produced by copyright. Copying for private or commercial purposes, in part or in whole, is not permitted unless authorised by Volkswagen AG. Volkswagen AG does not guarantee or accept any liability with respect to the correctness of information in this document. Copyright by Volkswagen AG.
satelettronica

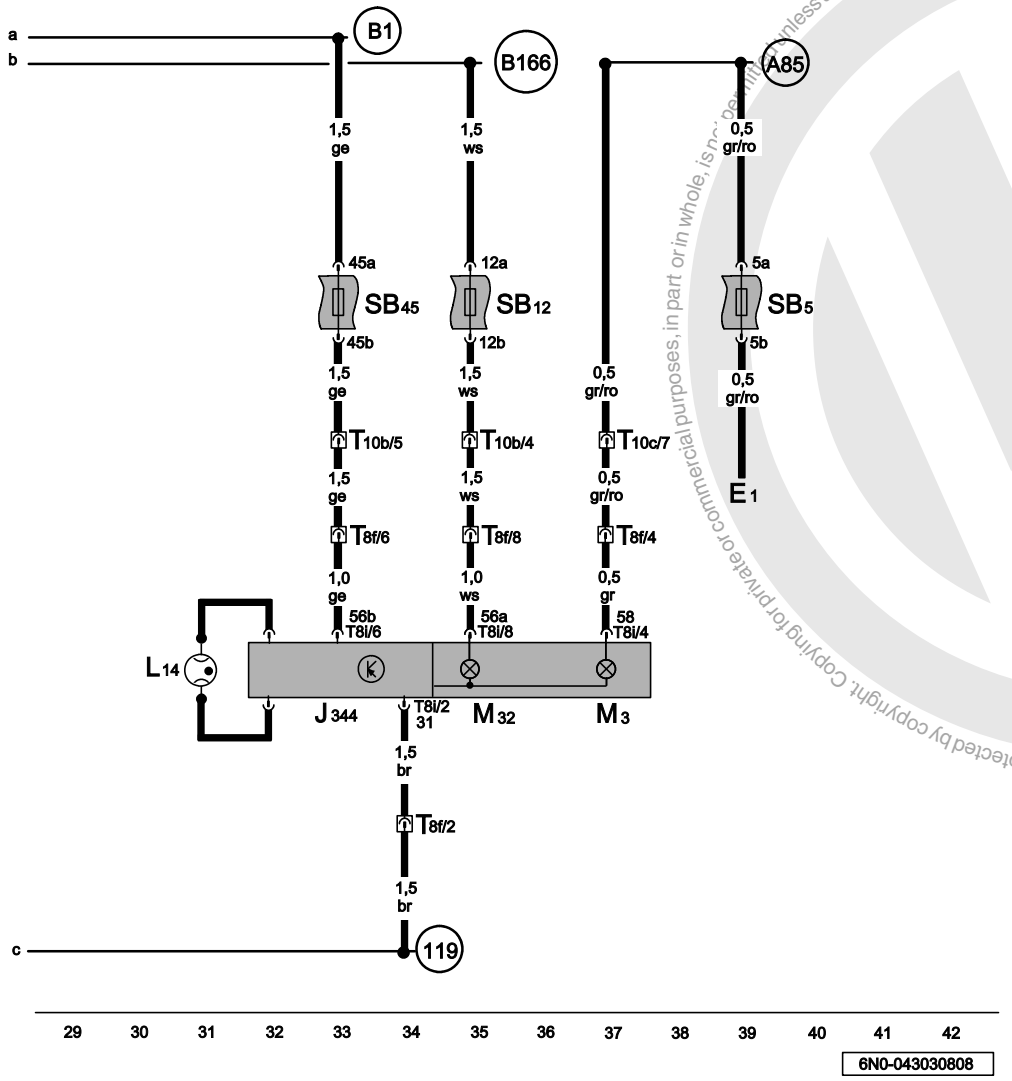

Right gas discharge light control unit, left gas discharge light, right headlight

E1	Light switch
J344	Right gas discharge bulb control unit
L14	Right gas discharge (xenon) bulb
M3	Right side light bulb
M32	Right headlight main beam bulb
SB5	Fuse 5 in relay plate fuse holder
SB12	Fuse 12 in relay plate fuse holder
SB45	Fuse 45 in relay plate fuse holder
T8f	8-pin connector, black, near left headlight
T8i	8-pin connector, adapter wiring on right headlight
T10b	10-pin connector, black, coupling station under relay carrier
T10c	10-pin connector, blue, coupling station under relay carrier
119	Earth connection 1, in headlight wiring harness
A85	Connection (58R), in dash panel wiring harness
B1	Connection (56b), in steering column switch wiring harness
B166	Connection (56a), in interior wiring harness

ws	=	white
sw	=	black
ro	=	red
br	=	brown
gn	=	green
bl	=	blue
gr	=	grey
li	=	purple
ge	=	yellow
or	=	orange
rs	=	pink

Protected by copyright. Copying for private or commercial purposes, in part or in whole, is not permitted unless authorised by Volkswagen AG. Volkswagen AG does not guarantee or accept any liability with respect to the correctness of information in this document. Copyright by Volkswagen AG.
satelettronica

Automatic anti-dazzle interior mirror, rain sensor

From October 1999

For alternatives to relay and fuse positions as well as multi-pin connector wiring - see "Fitting locations" section.

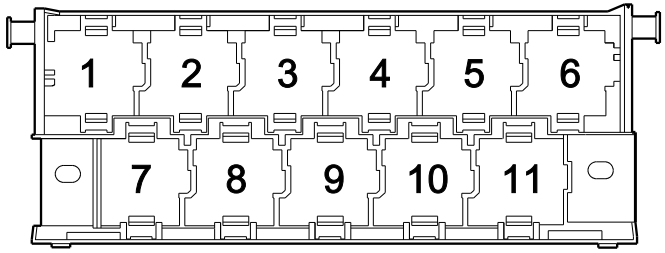

97-22850

Fuse colours

30 A - green
25 A - white
20 A - yellow
15 A - blue
10 A - red
7.5 A - brown
5 A - beige
3 A - lilac

Protected by copyright. Copying for private or commercial purposes, in part or in whole is not permitted unless authorised by Volkswagen AG. Volkswagen AG does not guarantee or accept any liability with respect to the correctness of information in this document. Copyright by Volkswagen AG.

satelettronica

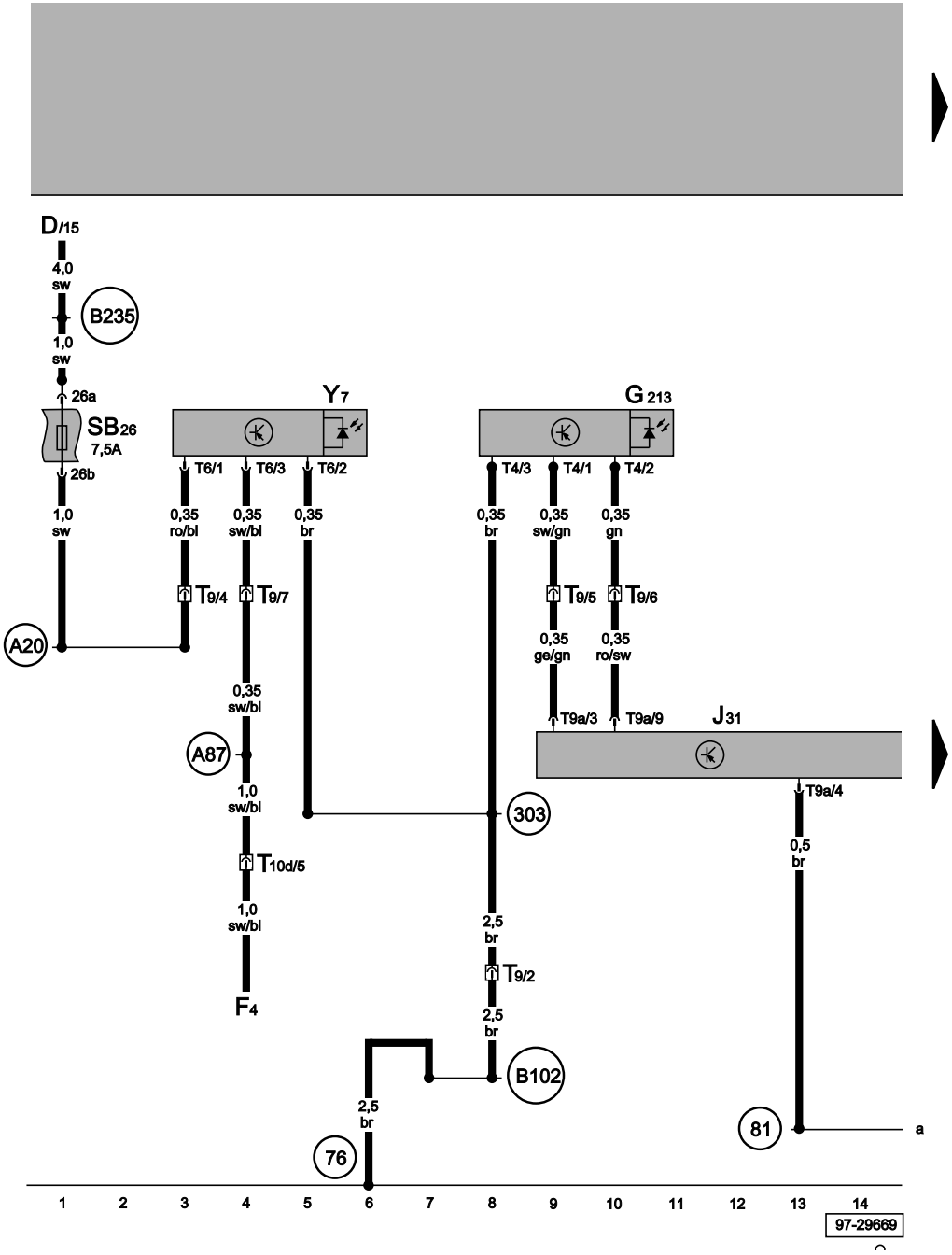

Automatic intermittent wash/wipe relay, automatic anti-dazzle interior mirror, rain sensor

D	Ignition/starter switch
F4	Reversing light switch
G213	Rain sensor
J31	Automatic intermittent wash/wipe relay, on relay plate
SB26	Fuse -26- in fuse box
T4	4-pin connector, near front interior light
T6	6-pin connector, near interior light, front
T9	9-pin connector, near interior light, front
T9a	9-pin connector, on automatic intermittent wash/wipe relay
T10d	10-pin connector, red, near relay station
Y7	Automatic anti-dazzle interior mirror
76	Earth point, near selector mechanism
81	Earth connection -1-, in dash panel wiring harness
303	Earth connection -rain sensor/mirror-, in interior wiring harness
A20	Connection (15a), in dash panel wiring harness
A87	Connection (RL), in dash panel wiring harness
B102	Earth connection, in interior wiring harness, front left
B235	Positive (+) connection -4- (15), in interior wiring harness

ws	=	white
sw	=	black
ro	=	red
br	=	brown
gn	=	green
bl	=	blue
gr	=	grey
li = purple
ge = yellow
or = orange
rs = pink

Copyright by Volkswagen AG. Volkswagen AG does not guarantee or accept any liability with respect to the correctness of information in this document. Copying for private or commercial purposes, in part or in whole, is not permitted unless authorised by Volkswagen AG.
satelettronica

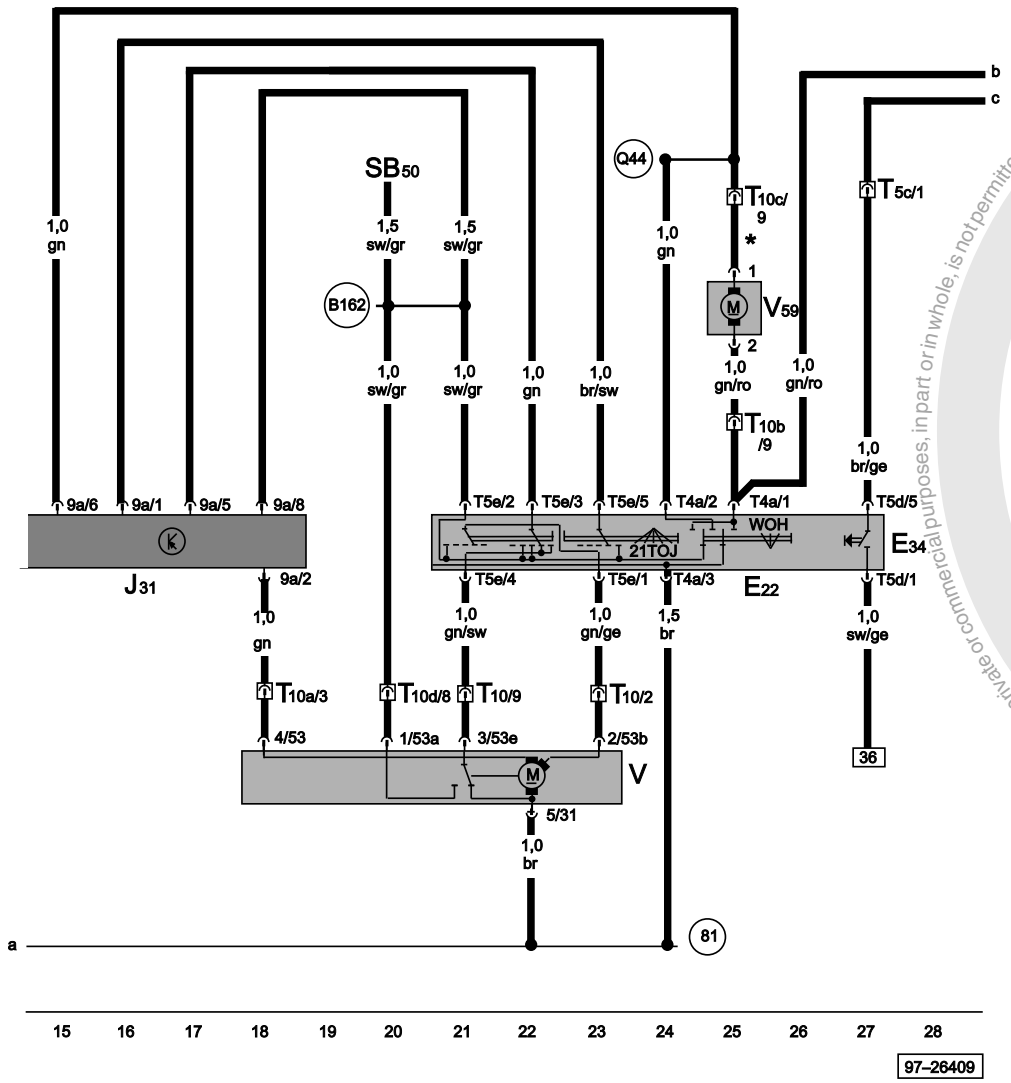

Intermittent wiper switch, windscreen wiper motor, windscreen and rear window washer pump, automatic intermittent wash/wipe relay

E22	Intermittent wiper switch
E34	Rear wiper switch
J31	Automatic intermittent wash/wipe relay
SB50	Fuse -50- in fuse box
T4a	4-pin connector, black, behind steering column switch trim
T5c	5-pin connector, black, in rear lid pre-wiring wiring harness
T5d	5-pin connector
T5e	5-pin connector
T9a	9-pin connector, on automatic intermittent wash/wipe relay
T10	10-pin connector, white, near relay station
T10a	10-pin connector, green, near relay station
T10b	10-pin connector, black, near relay station
T10c	10-pin connector, blue, near relay station
T10d	10-pin connector, red
V	Windscreen wiper motor
V59	Windscreen and rear window washer pump
81	Earth connection -1-, in dash panel wiring harness
B162	Connection (75a), in interior wiring harness
Q44	Connection -2-, in tailgate/bootlid wiring harness
*	Not with headlight washer system

ws	=	white
sw	=	black
ro	=	red
br	=	brown
gn	=	green
bl	=	blue
gr	=	grey
li	=	purple
ge	=	yellow
or	=	orange
rs	=	pink

Protected by Copyright. Copying for private or commercial purposes, in part or in whole, is not permitted unless authorised by Volkswagen AG. Volkswagen AG does not guarantee or assume any liability with respect to the correctness of information in this document. Copyright by Volkswagen AG.
satelettronica

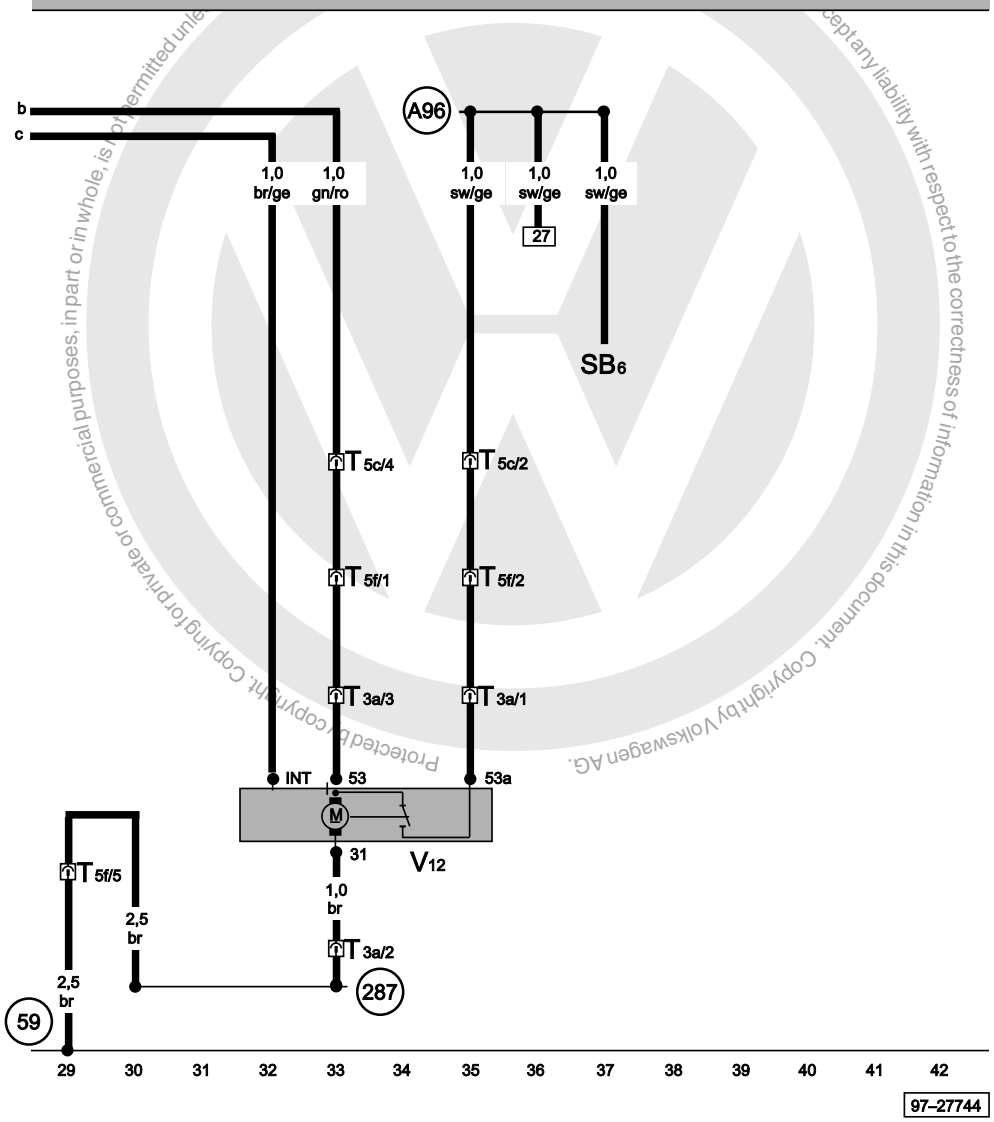

Rear window wiper motor

SB6	Fuse -6- in fuse box/relay plate
T3a	3-pin connector, black, in tailgate/bootlid, near wiper motor
T5c	5-pin connector, black, in rear lid pre-wiring wiring harness
T5f	5-pin connector, black, in tailgate/bootlid
V12	Rear window wiper motor
59	Earth point, near left tail light
287	Earth connection, in rear lid pre-wiring wiring harness
A96	Connection (53a), in dash panel wiring harness

ws	=	white
sw	=	black
ro	=	red
br	=	brown
gn	=	green
bl	=	blue
gr	=	grey
li	=	purple
ge	=	yellow
or	=	orange
rs	=	pink

Protected by copyright. Copying for private or commercial purposes, in part or in whole, is not permitted unless authorised by Volkswagen AG. Copyright by Volkswagen AG. Volkswagen AG does not accept any liability with respect to the correctness of information in this document.

satelettronica

Air conditioner (manual)

From October 1999

For alternatives to relay and fuse positions as well as multi-pin connector wiring - see "Fitting locations" section.

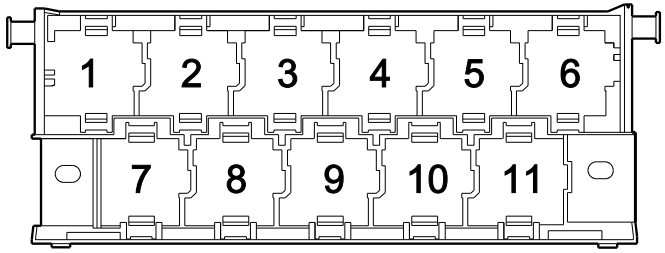

97-22850

Fuse colours

30 A - green
25 A - white
20 A - yellow
15 A - blue
10 A - red
7.5 A - brown
5 A - beige
3 A - lilac

Protected by copyright. Copying for private or commercial purposes, in part or in whole, is not permitted unless authorised by Volkswagen AG. Volkswagen AG does not guarantee or accept any liability with respect to the correctness of information in this document. Copyright by Volkswagen AG.

satelettronica

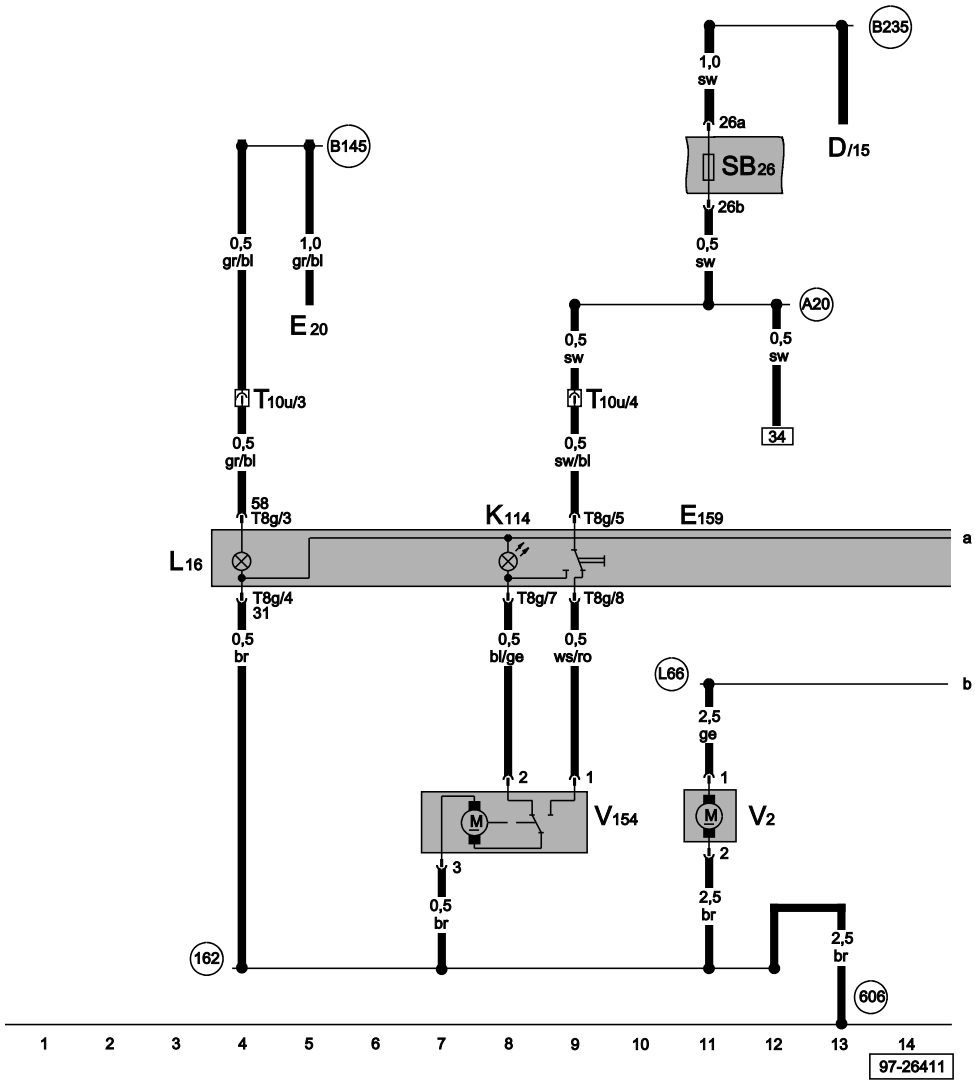

Fresh air/air recirculating flap switch, fresh air blower, fresh/recirculating air flap control motor

D	Ignition/starter switch
E20	Switches and instruments, lighting control
E159	Fresh air/air recirculating flap switch
K114	Fresh air/air recirculation warning lamp
L16	Fresh air controls light bulb
SB26	Fuse -26- in fuse box/relay plate
T8g	8-pin connector, behind dash panel, centre
T10u	10-pin connector, behind dash panel, centre
V2	Fresh air blower
V154	Fresh/recirculating air flap control motor
606	Earth point, under the centre console, near gear stick
162	Earth connection, in blower motor wiring harness
A20	Connection (15a), in dash panel wiring harness
B145	Positive (+) connection (58b), in interior wiring harness
B235	Connection -1- (15a), in interior wiring harness
L66	Connection, in heater blower wiring harness

ws	=	white
sw	=	black
ro	=	red
br	=	brown
gn	=	green
bl	=	blue
gr	=	grey
li	=	purple
ge	=	yellow
or	=	orange
rs	=	pink

Protected by copyright. Copying for private or commercial purposes, in part or in whole, is not permitted unless authorised by Volkswagen AG. Volkswagen AG does not guarantee or accept any liability with respect to the correctness of information in this document. Copyright by Volkswagen AG.
satelettronica

Protected by copyright. Copying for private or commercial purposes, in part or in whole, is not authorised by Volkswagen AG. Volkswagen AG does not guarantee or accept any liability with respect to the correctness of information in this document. Copyright by Volkswagen AG.

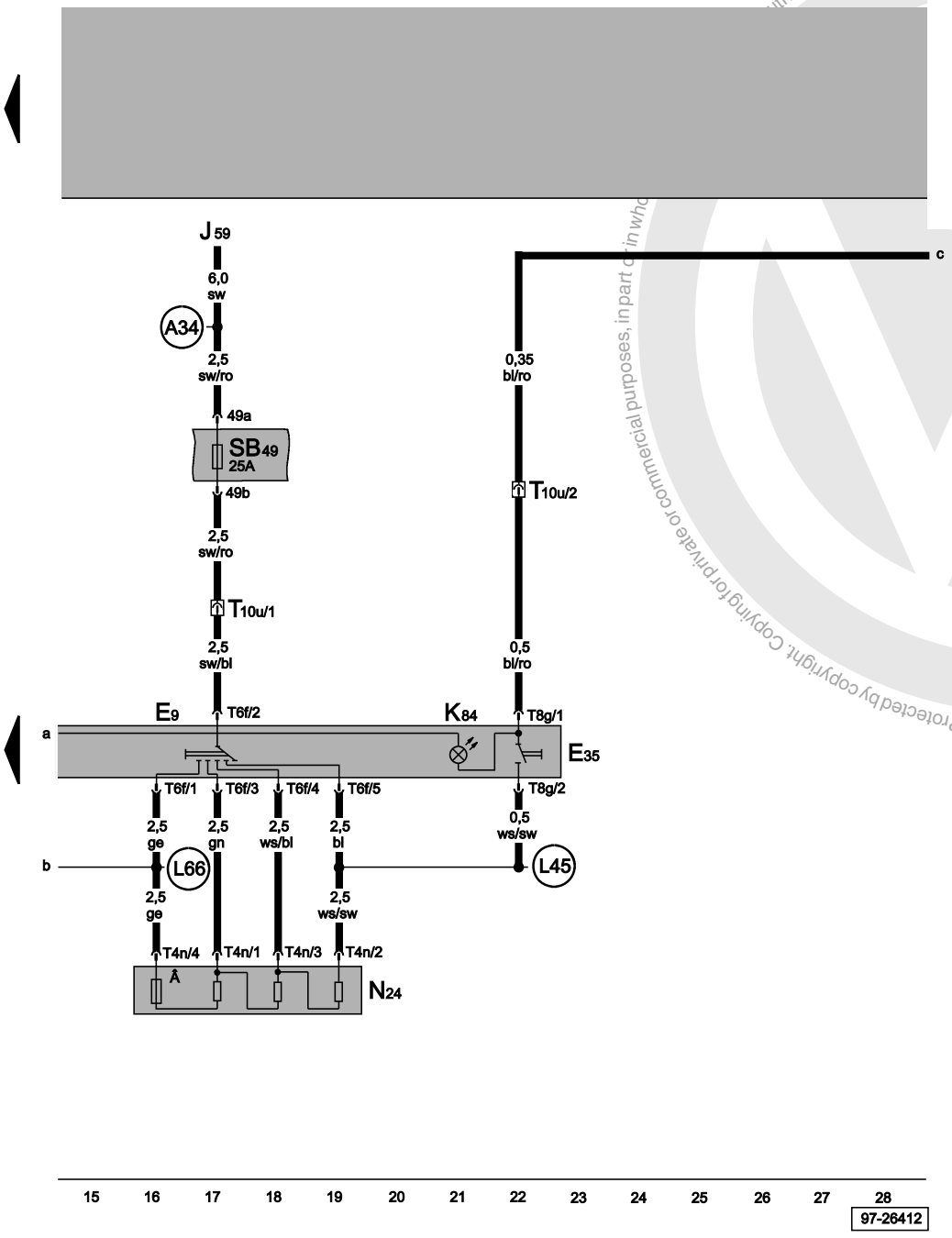

Fresh air blower switch, air conditioner switch

E9	Fresh air blower switch
E35	Air conditioner switch
J59	X contact relief relay
K84	Air conditioning system warning lamp
N24	Fresh air blower with overheating fuse series resistor
SB49	Fuse -49- in relay plate fuse box
T4n	4-pin connector, black, on fresh air blower series resistor
T6f	6-pin connector, behind dash panel
T8g	8-pin connector, behind dash panel
T10u	10-pin connector, behind dash panel
A34	Connection (75x), in dash panel wiring harness
L45	Connection, in air conditioner controls wiring harness
L66	Connection, in heater blower wiring harness

ws	=	white
sw	=	black
ro	=	red
br	=	brown
gn	=	green
bl	=	blue
gr	=	grey
li	=	purple
ge	=	yellow
or	=	orange
rs	=	pink

satelettronica

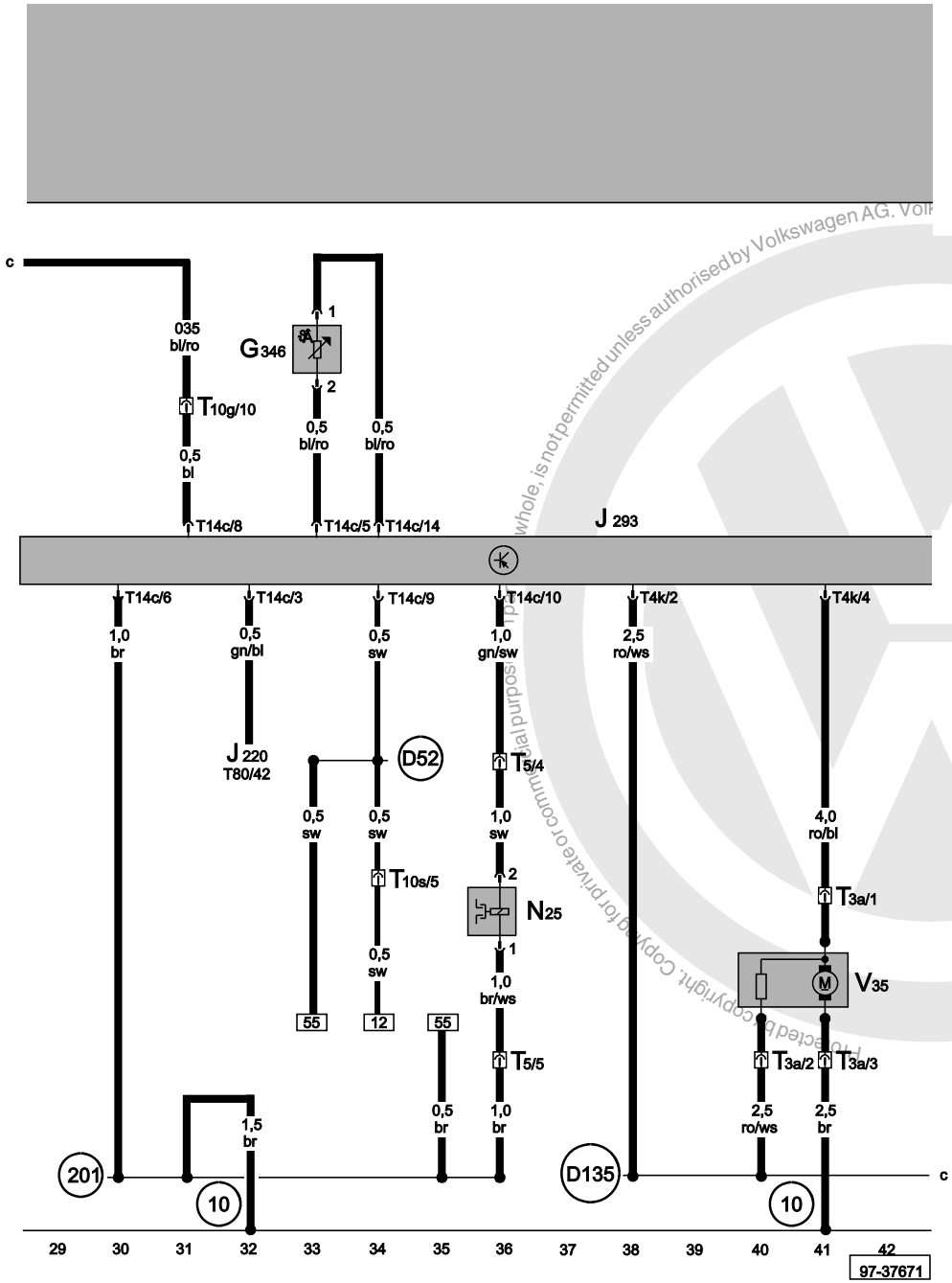

Radiator fan control unit, radiator fan, air conditioning system magnetic coupling, ambient temperature sensor

G346	Compressor switch-off temperature sender
J220	Motronic control unit
J293	Radiator fan control unit, on left in front of engine compartment
N25	Air conditioner magnetic coupling
T3a	3-pin connector, black, on left in front of engine compartment
T5	5-pin connector, near starter
T4k	4-pin connector, black
T10g	10-pin connector, brown, coupling station below relay carrier
T10s	10-pin connector, green, coupling station below relay carrier
T14c	14-pin connector, black
T80	80-pin connector, on engine control unit
V35	Radiator fan
10	Earth point, in plenum chamber
201	Earth connection -5-, in engine compartment wiring harness
D52	Positive connection (15a), in engine compartment wiring harness
D135	Connection (1st fan speed), in engine - headlight wiring harness

ws	=	white
sw	=	black
ro	=	red
br	=	brown
gn	=	green
bl	=	blue
gr	=	grey
li	=	purple
ge	=	yellow
or	=	orange
rs	=	pink

satelettronica

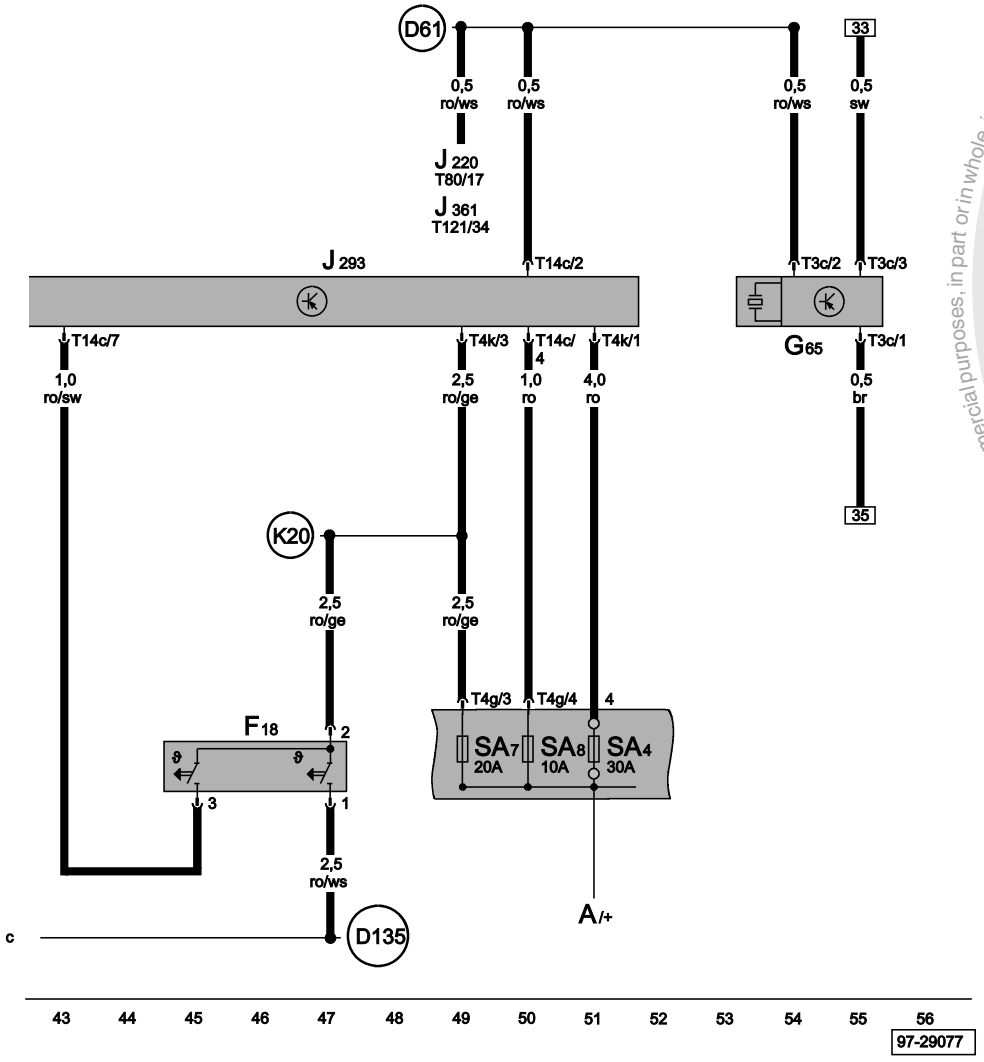

Radiator fan control unit, radiator fan thermo-switch, high pressure sender

A	Battery
F18	Radiator fan thermo-switch
G65	High pressure sender
J220	Motronic control unit
J293	Radiator fan control unit, in engine compartment, front left
J361	Simos control unit
SA4	Fuse -4- (30), in battery fuse box
SA7	Fuse -7- (30), in battery fuse box
SA8	Fuse -8- (30) in battery fuse box
T3c	3-pin connector, black, on high pressure sender
T4g	4-pin connector, black, on battery fuse box
T4k	4-pin connector, black
T14c	14-pin connector, black
T80	80-pin connector, on engine control unit
T121	121-pin connector, on engine control unit
D61	Connection (air conditioner), in engine compartment wiring harness
D135	Connection -1- (15a), in interior wiring harness
K20	Positive (+) connection -1- (30), in radiator fan wiring harness

ws	=	white
sw	=	black
ro	=	red
br	=	brown
gn	=	green
bl	=	blue
gr	=	grey
li	=	purple
ge	=	yellow
or	=	orange
rs	=	pink

Protected by copyright. Copying for private or commercial purposes, in part or in whole, is not permitted unless authorised by Volkswagen AG. Volkswagen AG does not guarantee or accept any liability with respect to the correctness of information in this document. Copyright by Volkswagen AG.
satelettronica

Climatronic

⇒ 1.0 l/37 kW - Motronic, engine codes ALD, AUC
⇒ 1.4 l/44 kW - Motronic, engine codes AKK, AUD
⇒ 1.4 l/40 kW - Motronic, engine code ANP
⇒ 1.4 l/55 kW - 4LV, engine codes AUA, APE
⇒ 1.4 l/74 kW - 4LV, engine, engine codes AUB, AQQ
⇒ 1.4 l/55 kW - 4CV, engine code AHW
⇒ 1.4 l/74 kW - 4CV, engine code AFK
⇒ 1.6 l/92 kW - Simos, engine codes ARC, AVY

From October 1999

Protected by copyright. Copying for private or commercial purposes, in part or in whole, is not permitted unless authorised by Volkswagen AG. Volkswagen AG does not guarantee or accept any liability with respect to the correctness of information in this document. Copyright by Volkswagen AG.

Notes:

For information concerning
- Relay and fuse assignment
- Multi-pin connectors
- Control units and relays
- Earth connections

⇒ Overview of Fitting Locations!

For information concerning
- Fault Finding Programs

⇒ Guided Fault Finding

satelettronica

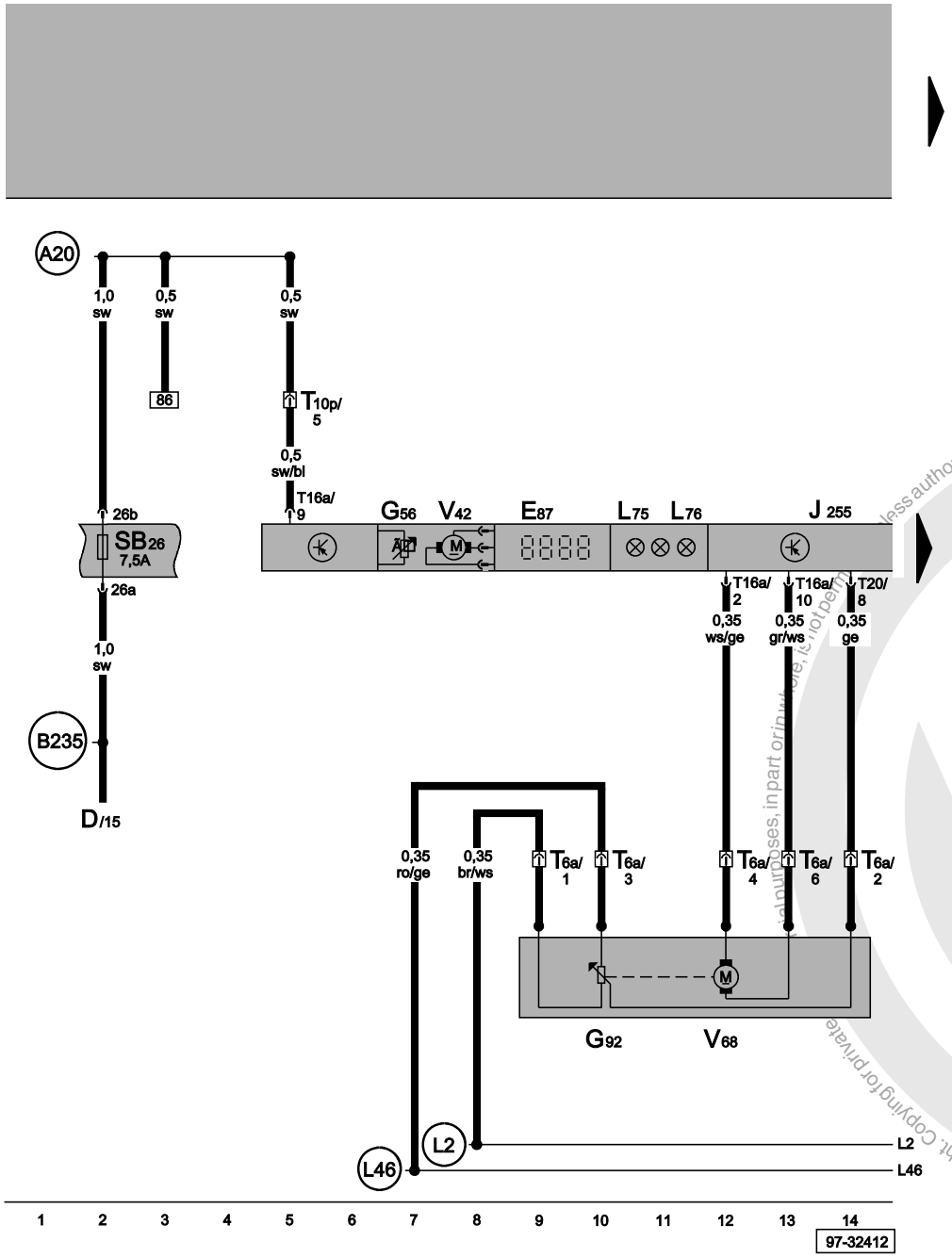

Climatronic control unit, temperature flap control motor, dash panel temperature sensor, temperature sensor blower, dash panel temperature sensor, temperature sensor blower

D	Ignition/starter switch
E87	Rear Climatronic operating and display unit
G56	Dash panel temperature sensor
G92	Potentiometer for temperature flap control motor
J255	Climatronic control unit
L75	Digital display illumination bulb
L76	Button illumination bulb
SB26	Fuse 26 on fuse holder
T6a	6-pin connector, centre behind dash panel
T10p	10-pin connector, centre behind dash panel
T16a	16-pin connector
T20	20-pin connector
V42	Temperature sensor blower
V68	Temperature flap control motor
A20	Connection (15a), in dash panel wiring harness
B235	Positive connection 4 (15a), in interior wiring harness
L2	Connection in air conditioning system wiring harness
L46	Connection (5 Volt), in Climatronic operating unit wiring harness

ws	=	white
sw	=	black
ro	=	red
rt	=	red
br	=	brown
gn	=	green
bl	=	blue
gr	=	grey
li	=	purple
vi	=	purple
ge	=	yellow
or	=	orange
rs	=	pink

satelettronica

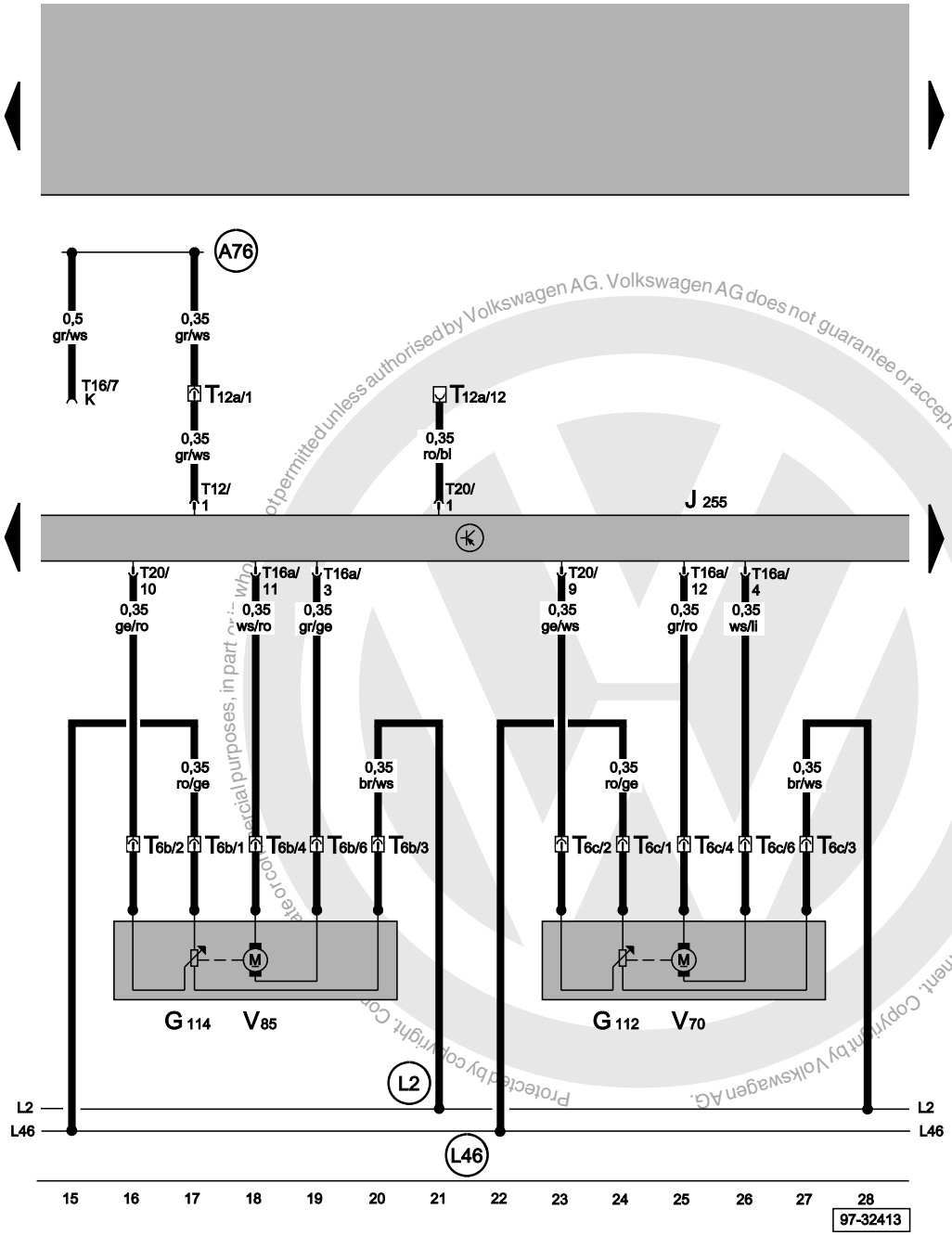

ws = white
sw = black
ro = red
rt = red
br = brown
gn = green
bl = blue
gr = grey
li = purple
vi = purple
ge = yellow
or = orange
rs = pink

Climatronic control unit, control motor for central flap, control motor for footwell/defroster flap

G112	Central flap control motor potentiometer
G114	Footwell/defroster flap control motor potentiometer
J255	Climatronic control unit
T6b	6-pin connector, centre behind dash panel
T6c	6-pin connector, centre behind dash panel
T12	12-pin connector
T12a	12-pin connector, centre behind dash panel
T16	16-pin connector, self-diagnosis connection
T16a	16-pin connector
T20	20-pin connector
V70	Central flap control motor
V85	Footwell and defroster flap control motor
A76	Connection (K-diagnosis wire), in dash panel wiring harness
L2	Connection in air conditioning system wiring harness
L46	Connection (5 Volt), in Climatronic operating unit wiring harness

satelettronica

Protected by copyright. Copyright by Volkswagen AG. Not permitted unless authorised by Volkswagen AG. Volkswagen AG does not guarantee or accept any liability with respect to the correctness of information in this document. Copyright by Volkswagen AG.

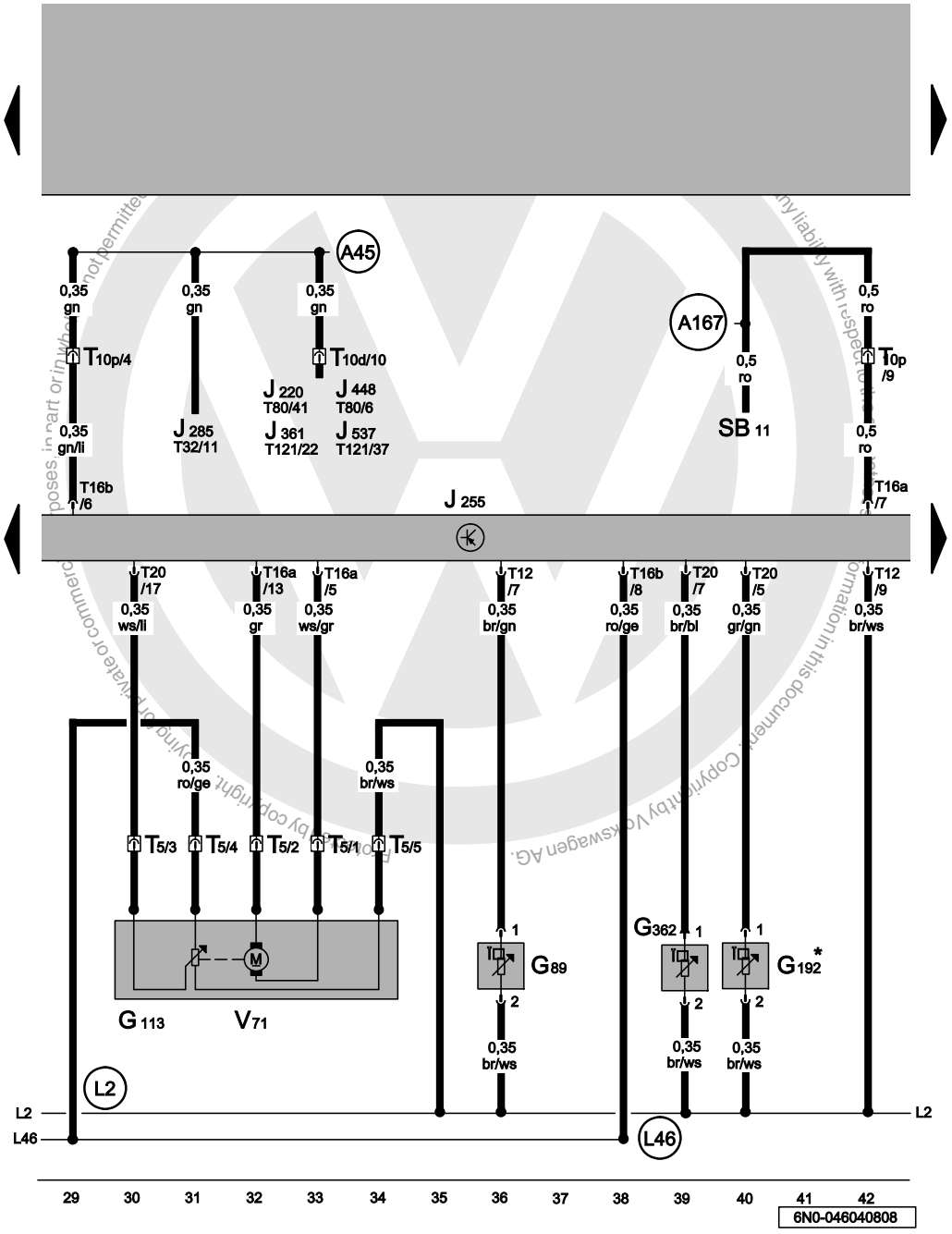

Climatronic control unit, air flow flap control motor, vent temperature sensor, fresh air duct temperature sensor

G89	Fresh air intake duct temperature sensor, on right under dash panel
G113	Potentiometer for servomotor for air flow flap
G192	Footwell vent temperature sender
G362	Evaporator output temperature sender
J220	Motronic control unit
J255	Climatronic control unit
J285	Control unit with display in dash panel insert
J361	Simos injection system control unit
J448	4CV injection system control unit
J537	4LV injection system control unit
SB11	Fuse 11 on fuse holder
T5	5-pin connector
T10d	10-pin connector, red
T10p	10-pin connector
T12	12-pin connector
T16a	16-pin connector
T16b	16-pin connector
T20	20-pin connector
T32	32-pin connector, blue
T80	80-pin connector
T121	121-pin connector
V71	Servomotor for air flow flap
A45	Connection (RPM signal), in dash panel wiring harness
A167	Positive connection 3 (30a), in dash panel wiring harness
L2	Connection in air conditioning system wiring harness
L46	Connection (5 Volt), in Climatronic operating unit wiring harness
*	From October 1999

ws	=	white
sw	=	black
ro	=	red
rt	=	red
br	=	brown
gn	=	green
bl	=	blue
gr	=	grey
li	=	purple
vi	=	purple
ge	=	yellow
or	=	orange
rs	=	pink

satelettronica

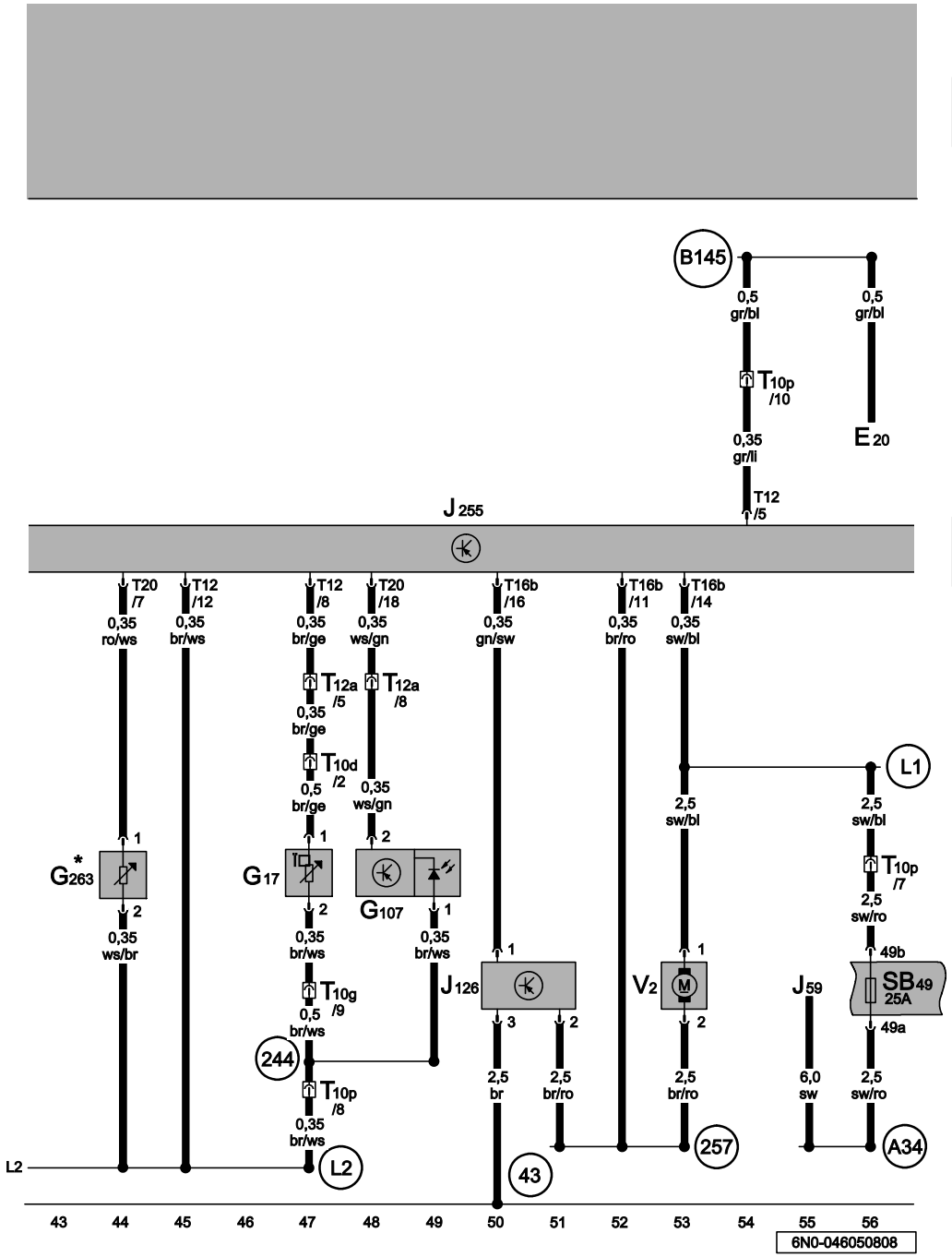

Climatronic control unit, temperature sensor, fresh air blower, fresh air blower control unit, sunlight penetration photosensor

E20	Switch and instrument illumination regulator
G17	Ambient temperature sensor, on front bumper on left
J59	X-contact relief relay
G263	Evaporator output temperature sender
G107	Sunlight penetration photosensor
J126	Fresh air blower control unit, on right under dash panel
J255	Climatronic control unit
SB49	Fuse 49 on fuse holder
T10d	10-pin connector, red
T10g	10-pin connector, brown
T10p	10-pin connector
T12	12-pin connector
T12a	12-pin connector
T16b	16-pin connector
T20	20-pin connector
V2	Fresh air blower
43	Earth point, lower part of right A-pillar
244	Earth connection (sender earth), in Climatronic wiring harness
257	Earth connection 2, in Climatronic wiring harness
A34	Connection (75x), in dash panel wiring harness
B145	Positive connection (58b), in interior wiring harness
L1	Positive connection (75), in air conditioning system wiring harness
L2	Connection in air conditioning system wiring harness
*	From October 1999

ws	=	white
sw	=	black
ro	=	red
rt	=	red
br	=	brown
gn	=	green
bl	=	blue
gr	=	grey
li	=	purple
vi	=	purple
ge	=	yellow
or	=	orange
rs	=	pink

Protected by copyright. Copying for private or commercial purposes, in part or in whole, is not permitted unless authorised by Volkswagen AG. Volkswagen AG does not guarantee or accept any liability with respect to the correctness of information in this document. Copyright by Volkswagen AG.
satelettronica

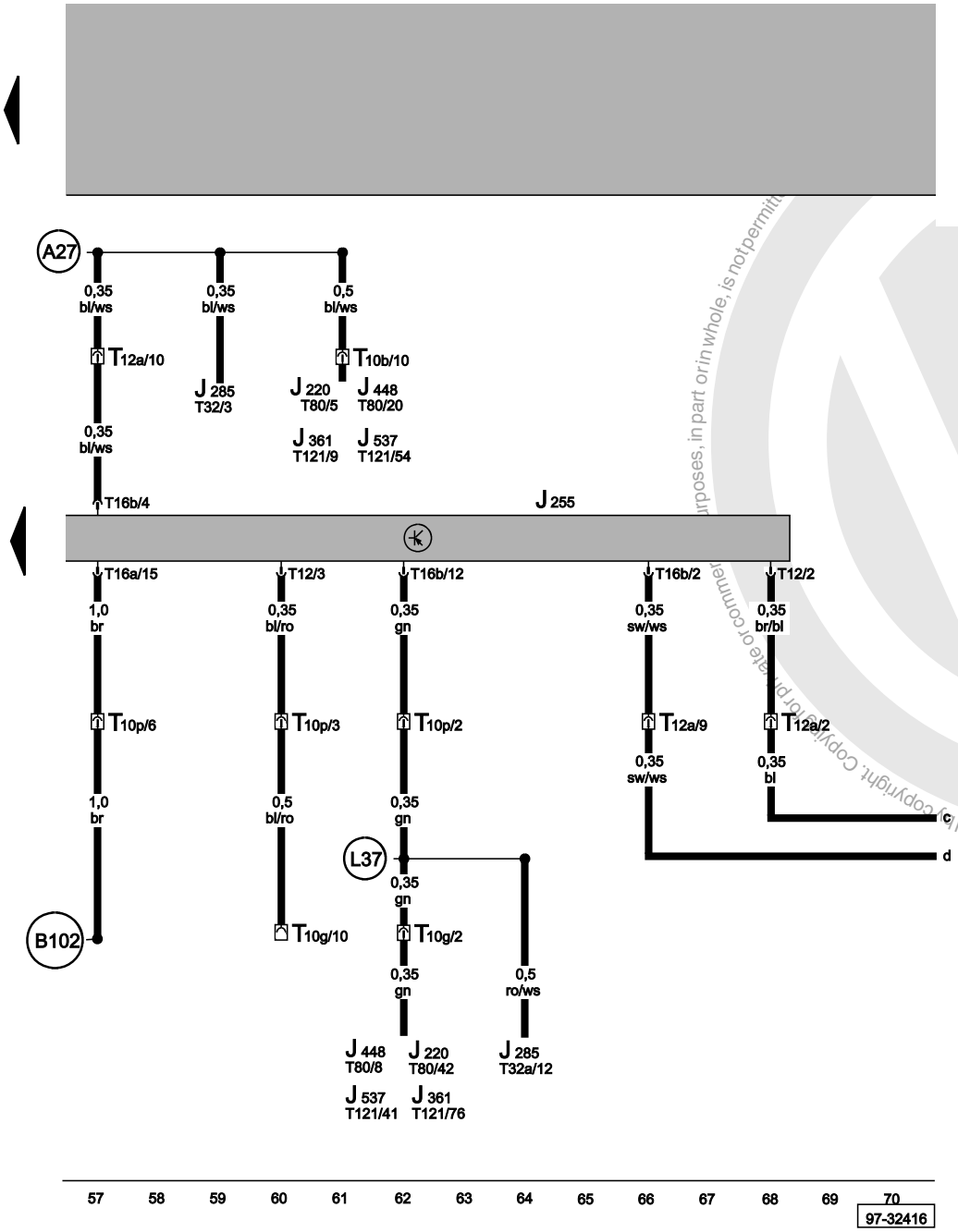

Climatronic control unit

J220	Motronic control unit
J255	Climatronic control unit
J285	Control unit with display in dash panel insert
J361	Simos injection system control unit
J448	4CV injection system control unit
J537	4LV injection system control unit
T10b	10-pin connector, black, coupling station under relay carrier
T10g	10-pin connector, brown, coupling station under relay carrier
T10p	10-pin connector, centre behind dash panel
T12	12-pin connector
T12a	12-pin connector, centre behind dash panel
T16a	16-pin connector
T16b	16-pin connector
T32	32-pin connector, blue
T32a	32-pin connector, green
T80	80-pin connector
T121	121-pin connector
A27	Connection (speed signal), in dash panel wiring harness
B102	Earth connection, in front left interior wiring harness
L37	Connection 2, in Climatronic operating unit wiring harness

ws	=	white
sw	=	black
ro	=	red
rt	=	red
br	=	brown
gn	=	green
bl	=	blue
gr	=	grey
li	=	purple
vi	=	purple
ge	=	yellow
or	=	orange
rs	=	pink

Protected by copyright. Copyright by Volkswagen AG.
satelettronica

Radiator fan control unit, radiator fan, air conditioning system magnetic clutch

J293	Radiator fan control unit, in front left of engine compartment
N25	Air conditioning system magnetic clutch
T2	2-pin connector, on air conditioner compressor
T3a	3-pin connector, front left in engine compartment
T4k	4-pin connector
T5	5-pin connector
T10d	10-pin connector, red, coupling station under relay carrier
T10g	10-pin connector, brown, coupling station under relay carrier
T14c	14-pin connector
V35	Right fan for radiator
10	Earth point, in plenum chamber
201	Earth connection 5, in engine compartment wiring harness
K21	Connection 1, in radiator fan wiring harness

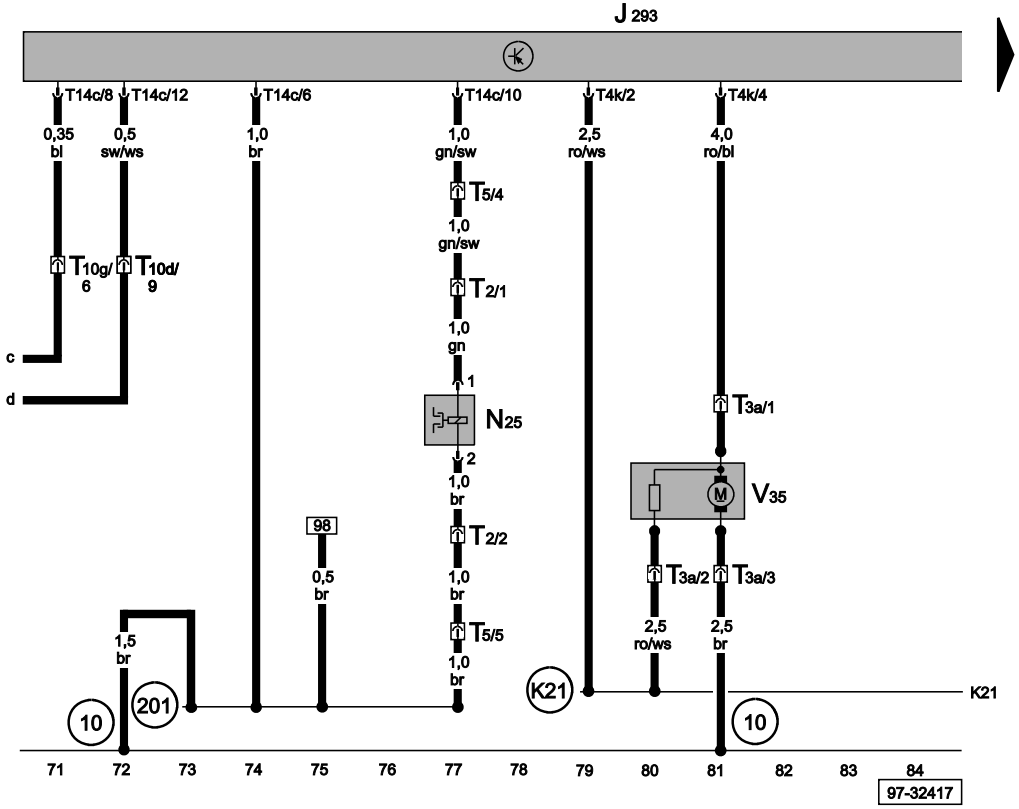

ws	=	white
sw	=	black
ro	=	red
rt	=	red
br	=	brown
gn	=	green
bl	=	blue
gr	=	grey
li	=	purple
vi	=	purple
ge	=	yellow
or	=	orange
rs	=	pink

Protected by copyright. Copying for private or commercial purposes, in part or in whole, is not permitted unless authorised by Volkswagen AG. Volkswagen AG does not guarantee or accept any liability with respect to the correctness of information in this document. Copyright by Volkswagen AG.
satelettronica

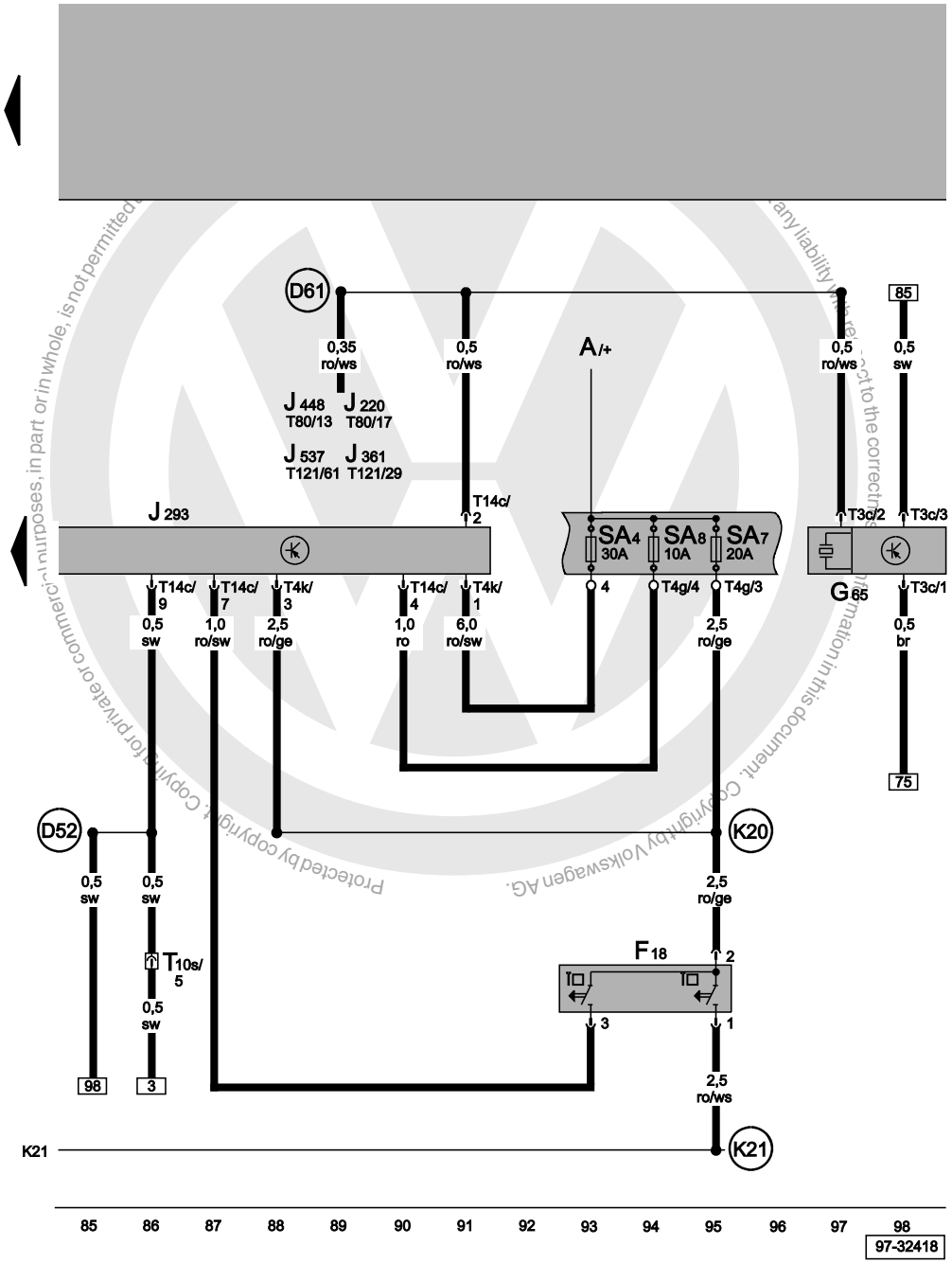

Radiator fan control unit, thermal switch for radiator fan, high-pressure sender, high-pressure sender, fuses

A	Battery
F18	Thermal switch for radiator fan
G65	High-pressure sender
J220	Motronic control unit
J293	Radiator fan control unit, in front left of engine compartment
J361	Simos injection system control unit
J448	4CV injection system control unit
J537	4LV injection system control unit
SA4	Fuse 4 (30), on battery fuse holder
SA7	Fuse 7 (30), on battery fuse holder
SA8	Fuse 8 (30), on battery fuse holder
T3c	3-pin connector
T4g	4-pin connector
T4k	4-pin connector
T10s	10-pin connector, light green, coupling station under relay carrier
T14c	14-pin connector
T80	80-pin connector
T121	121-pin connector
D52	Positive connection (15a), in engine compartment wiring harness
D61	Connection (air conditioning system), in engine compartment wiring harness
K20	Positive connection 1 (30), in radiator fan wiring harness
K21	Connection 1, in radiator fan wiring harness

ws	=	white
sw	=	black
ro	=	red
rt	=	red
br	=	brown
gn	=	green
bl	=	blue
gr	=	grey
li	=	purple
vi	=	purple
ge	=	yellow
or	=	orange
rs	=	pink

satelettronica

12V socket

From October 1999

For alternatives to relay and fuse positions as well as multi-pin connector wiring - see "Fitting locations" section.

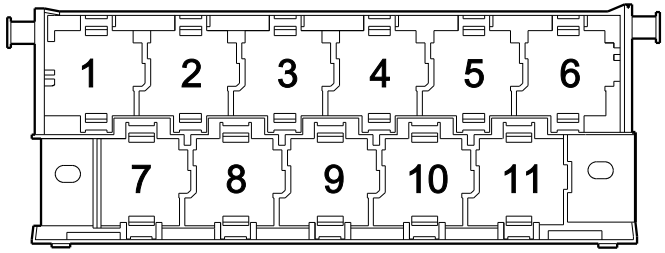

97-22850

Fuse colours

30 A - green
25 A - white
20 A - yellow
15 A - blue
10 A - red
7.5 A - brown
5 A - beige
3 A - lilac

Protected by copyright. Copying for private or commercial purposes, in part or in whole, is not permitted unless authorised by Volkswagen AG. Volkswagen AG does not guarantee or accept any liability with respect to the correctness of information in this document. Copyright by Volkswagen AG.

satelettronica

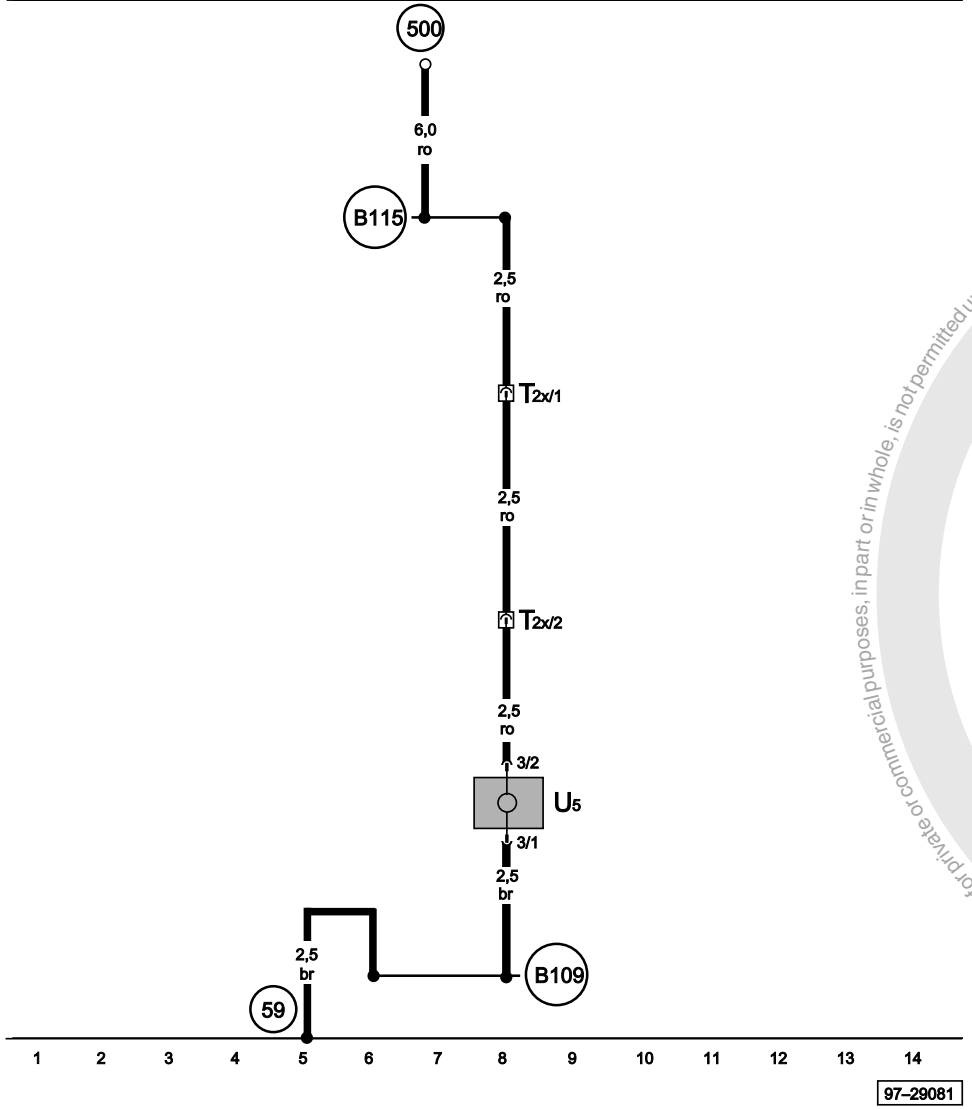

12V socket

T2x 2-pin connector
U5 12 V socket

59 Earth point, near left tail light

500 Screw connection -1- (30), on relay plate

B109 Earth connection, in rear left interior wiring harness

B115 Positive (+) connection (30, central electrics), in interior wiring harness

ws = white
sw = black
ro = red
br = brown
gn = green
bl = blue
gr = grey
li = purple
ge = yellow
or = orange
rs = pink

Protected by copyright. Copying for private or commercial purposes, in part or in whole, is not permitted unless authorised by Volkswagen AG. Volkswagen AG does not guarantee or accept any liability with respect to the correctness of information in this document. Copyright by Volkswagen AG.

satelettronica

Climatronic

⇒ **1.4 ltr./55 kW - Turbo diesel engine with unit injectors, engine codes AMF**

From October 1999

For alternatives to relay and fuse positions as well as multi-pin connector wiring - see "Fitting locations" section.

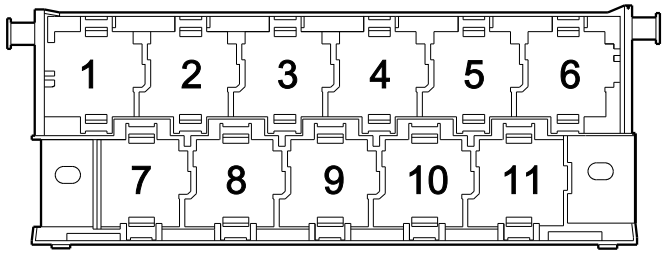

97-22850

Fuse colours

30 A - green
25 A - white
20 A - yellow
15 A - blue
10 A - red
7.5 A - brown
5 A - beige
3 A - lilac

Protected by copyright. Copying for private or commercial purposes, in part or in whole, is not permitted unless authorised by Volkswagen AG. Volkswagen AG does not guarantee or accept any liability with respect to the correctness of information in this document. Copyright by Volkswagen AG.

satelettronica

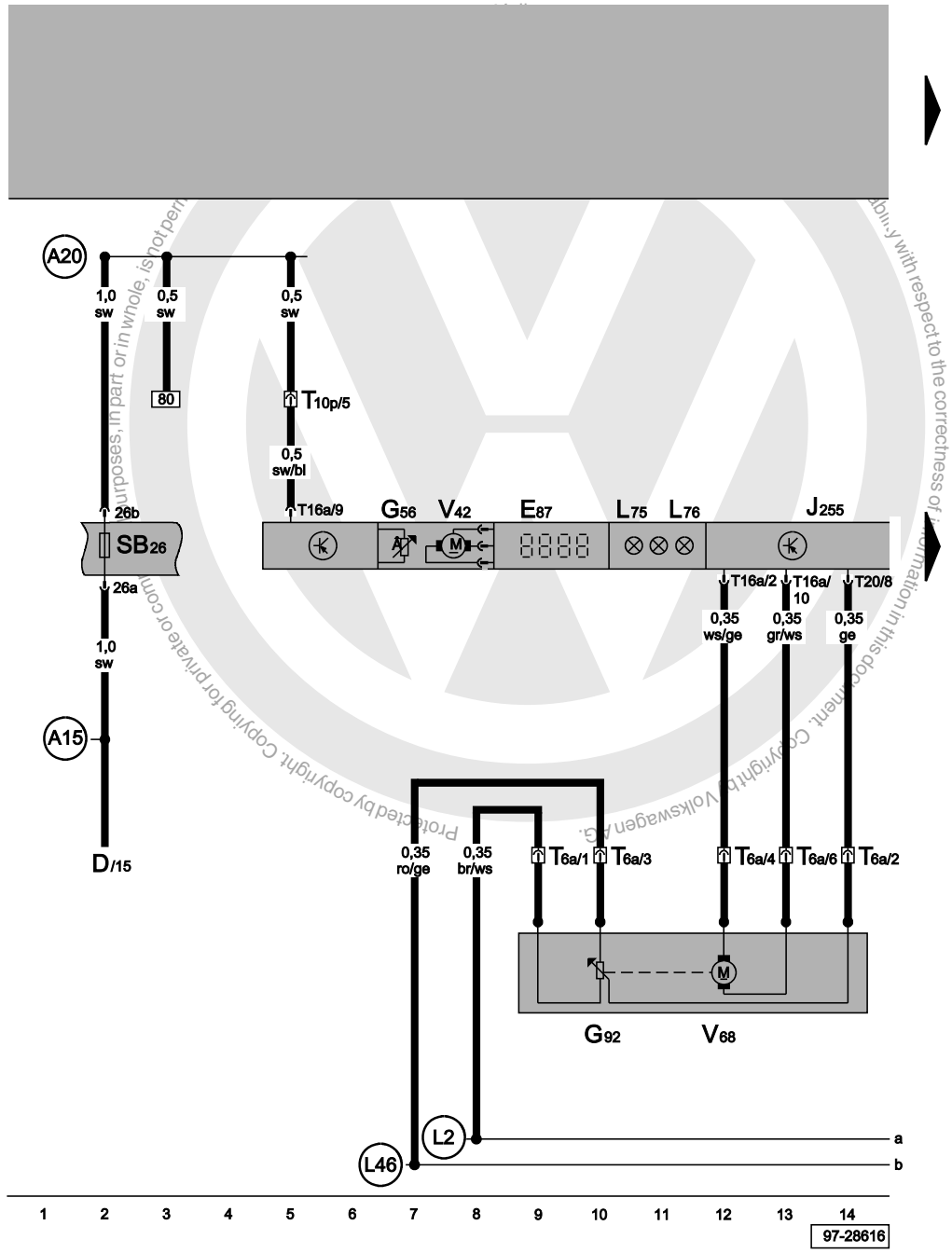

Climatronic control unit, temperature flap control motor

D	Ignition/starter switch
E87	Control and display unit for Climatronic
G56	Dash panel temperature sensor
G92	Control motor potentiometer for temperature flap
J255	Climatronic control unit
L75	Digital display illumination
L76	Button illumination
SB26	Fuse -26- in fuse box
T6a	6-pin connector, behind dash panel, centre
T10p	10-pin connector, behind dash panel, centre
T16a	16-pin connector
T20	20-pin connector
V42	Temperature sensor blower
V68	Temperature flap control motor
A20	Connection (15a), in dash panel wiring harness
A15	Positive (+) connection (15), in instruments wiring harness
L2	Connection, in air conditioner wiring harness
L46	Connection (5V), in Climatronic controls wiring harness

ws	=	white
sw	=	black
ro	=	red
br	=	brown
gn	=	green
bl	=	blue
gr	=	grey
li	=	purple
ge	=	yellow
or	=	orange
rs	=	pink

satelettronica

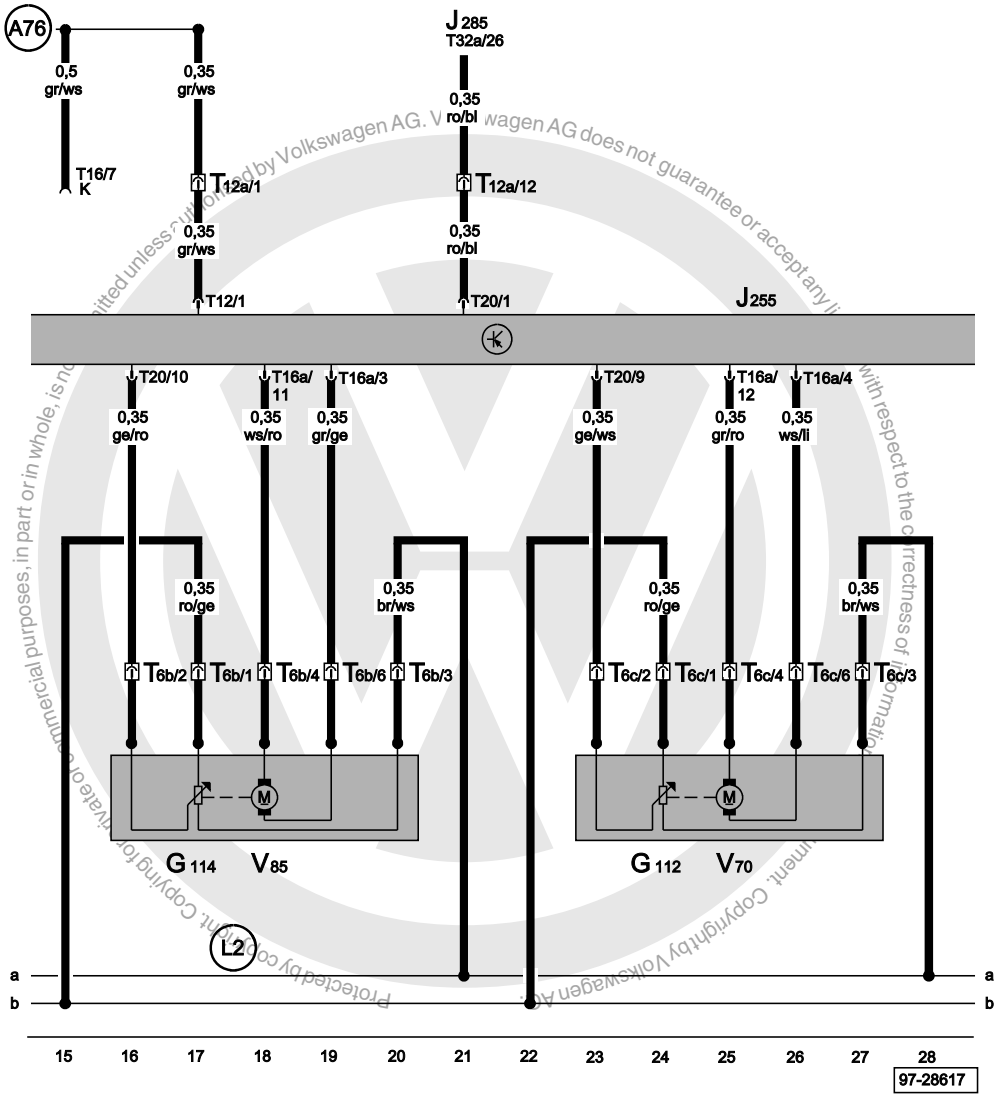

Climatronic control unit, central flap control motor, footwell/ defroster flap control motor

G112	Control motor potentiometer, central flap
G114	Control motor potentiometer, footwell/defroster flap
J255	Climatronic control unit
J285	Control unit with display in dash panel insert
T6b	6-pin connector, behind dash panel, centre
T6c	6-pin connector, behind dash panel, centre
T12	12-pin connector
T12a	12-pin connector, behind dash panel, centre
T16	16-pin connector, self-diagnosis connection
T16a	16-pin connector
T20	20-pin connector
T32a	32-pin connector, green, on dash panel insert
V70	Central flap control motor
V85	Footwell/defroster flap control motor
A76	Connection (diagnosis wire K), in dash panel wiring harness
L2	Connection, in air conditioner wiring harness
L46	Connection (5V), in Climatronic controls wiring harness

ws	=	white
sw	=	black
ro	=	red
br	=	brown
gn	=	green
bl	=	blue
gr	=	grey
li = purple
ge = yellow
or = orange
rs = pink

satelettronica

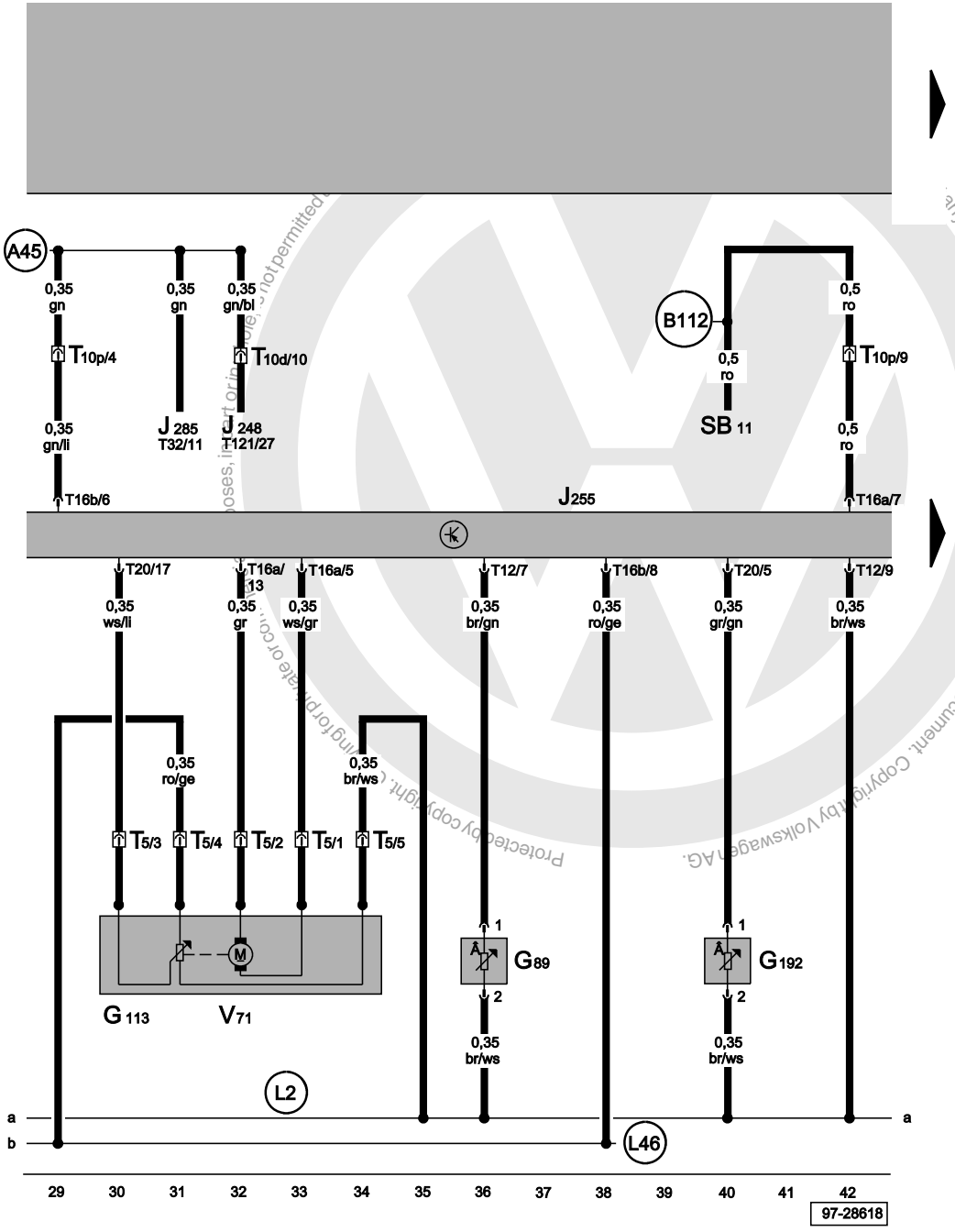

Climatronic control unit, air flow flap control motor, vent temperature sender, fresh air intake duct temperature sensor

G89	Fresh air intake duct temperature sensor, on right under dash panel
G113	Control motor potentiometer, air flow flap
G192	Vent temperature sender, footwell
J248	Diesel direct injection system control unit, in plenum chamber, centre
J255	Climatronic control unit
SB11	Fuse -11- in fuse box
T5	5-pin connector
T10d	10-pin connector, red
T10p	10-pin connector, behind dash panel, centre
T12	12-pin connector
T16a	16-pin connector
T16b	16-pin connector
T20	20-pin connector
T32	32-pin connector, blue, on dash panel insert
T121	121-pin connector
V71	Air flow flap control motor
A45	Connection (engine speed signal), in dash panel wiring harness
B112	Positive (+) connection (30a),on right in interior wiring harness
L2	Connection, in air conditioner wiring harness
L46	Connection (5V), in Climatronic controls wiring harness

ws	=	white
sw	=	black
ro	=	red
br	=	brown
gn	=	green
bl	=	blue
gr	=	grey
li	=	purple
ge	=	yellow
or	=	orange
rs	=	pink

satelettronica

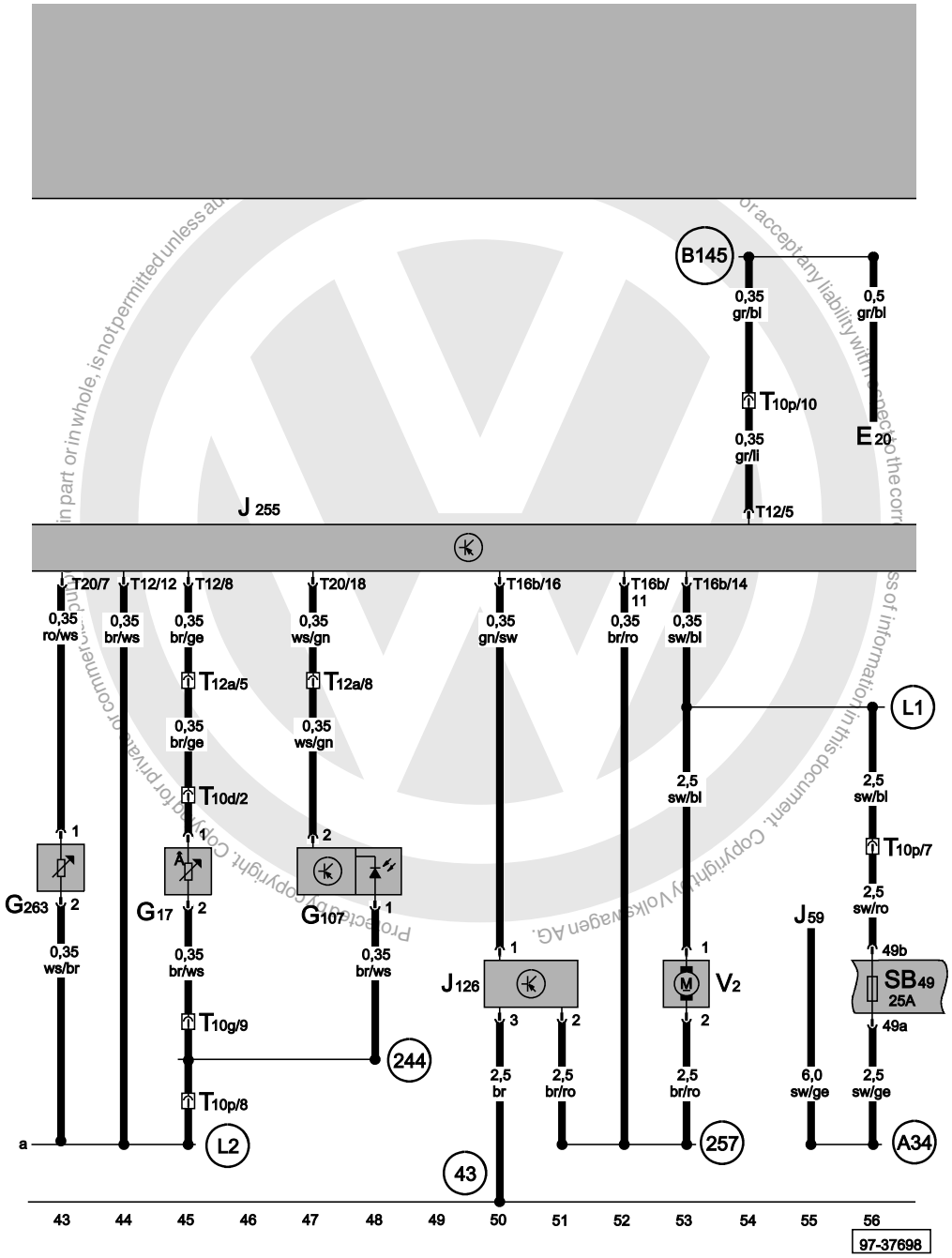

Climatronic control unit, temperature sensor, fresh air blower, fresh air blower control unit, sunlight penetration photosensor

E20	Switches and instruments illumination regulator
G17	Ambient temperature sensor, on left in front bumper
G107	Sunlight penetration photosensor
J59	X contact relief relay
J126	Fresh air blower control unit, on right below dash panel
J255	Climatronic control unit
SB49	Fuse 49 in fuse holder
T10d	10-pin connector, red
T10g	10-pin connector, brown
T10p	10-pin connector
T12	12-pin connector
T12a	12-pin connector
T16b	16-pin connector
T20	20-pin connector
V2	Fresh air blower
43	Earth point, lower right A-pillar
244	Earth connection (sender earth), in Climatronic wiring harness
257	Earth connection -2-, in Climatronic wiring harness
A34	Connection (75x), in dash panel wiring harness
B145	Positive connection (58b), in interior wiring harness
L1	Positive connection (75), in air conditioner wiring harness
L2	Connection, in air conditioner wiring harness

ws	=	white
sw	=	black
ro	=	red
br	=	brown
gn	=	green
bl	=	blue
gr	=	grey
li	=	purple
ge	=	yellow
or	=	orange
rs	=	pink

satelettronica

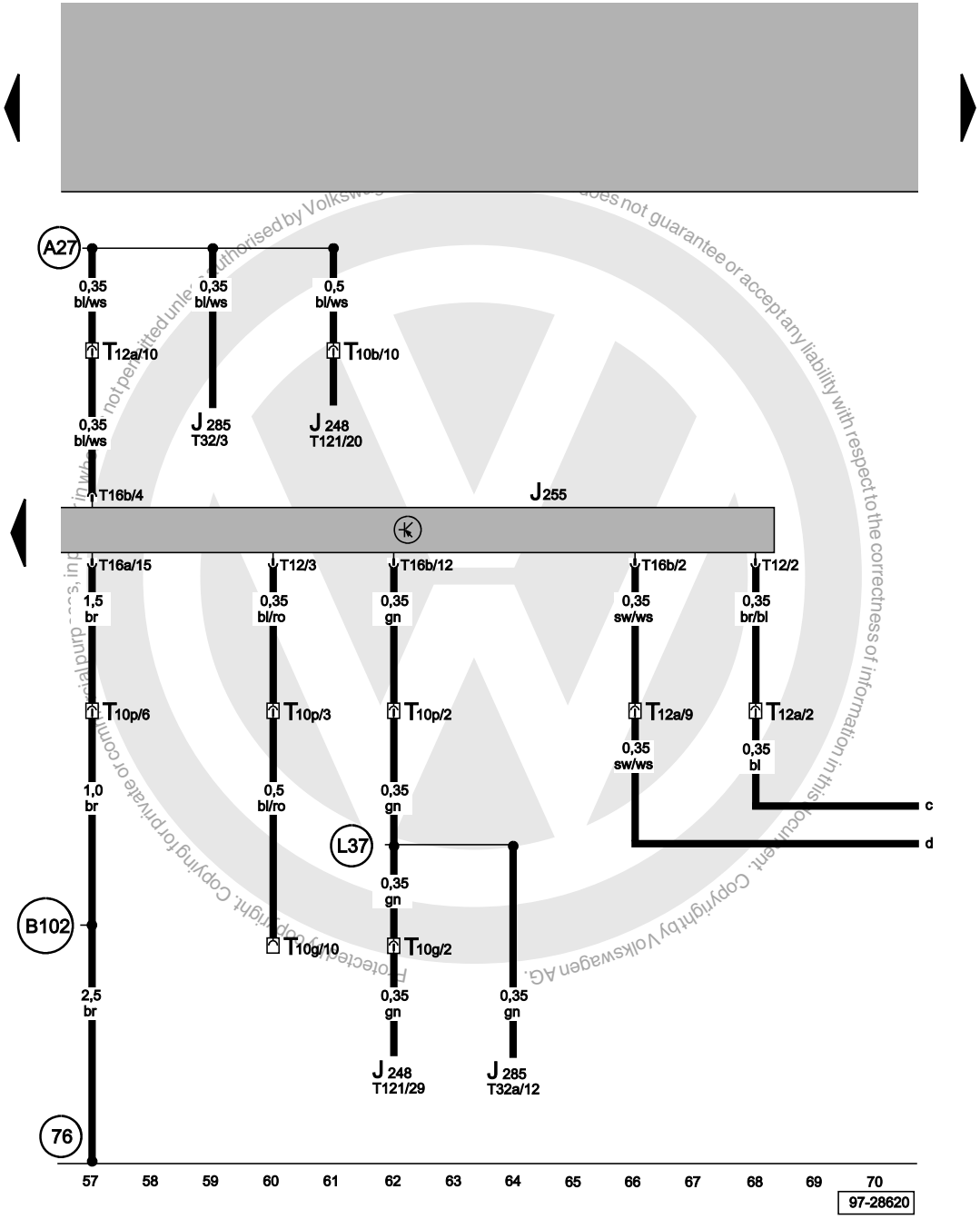

Climatronic control unit

J248	Diesel direct injection system control unit, in plenum chamber, centre
J255	Climatronic control unit
J285	Control unit with display in dash panel insert
T10b	10-pin connector, black, connector point under relay carrier
T10g	10-pin connector, brown, connector point under relay carrier
T10p	10-pin connector, behind dash panel, centre
T12	12-pin connector
T12a	12-pin connector, behind dash panel, centre
T16a	16-pin connector
T16b	16-pin connector
T32	32-pin connector, blue, on dash panel insert
T32a	32-pin connector, green, on dash panel insert
T121	121-pin connector
76	Earth point, near selector mechanism
A27	Connection (speed signal), in dash panel wiring harness
B102	Earth connection, in front left interior wiring harness
L37	Connection -2-, in Climatronic controls wiring harness

ws	=	white
sw	=	black
ro	=	red
br	=	brown
gn	=	green
bl	=	blue
gr	=	grey
li = purple
ge = yellow
or = orange
rs = pink

satelettronica

Radiator fan control unit, radiator fan, air conditioning system magnetic coupling

J293	Radiator fan control unit, in engine compartment, front left
N25	Air conditioning system magnetic coupling
T3a	3-pin connector, in engine compartment, front left
T4k	4-pin connector
T10s	10-pin connector, light green, connector point under relay carrier
T14b	14-pin connector, in engine compartment, left
T14c	14-pin connector
V35	Radiator fan, right
12	Earth point, in engine compartment, left
201	Earth connection -5-, in engine compartment wiring harness
D52	Positive (+) connection (15a), in engine compartment wiring harness
K21	Connection -1-, in radiator fan wiring harness

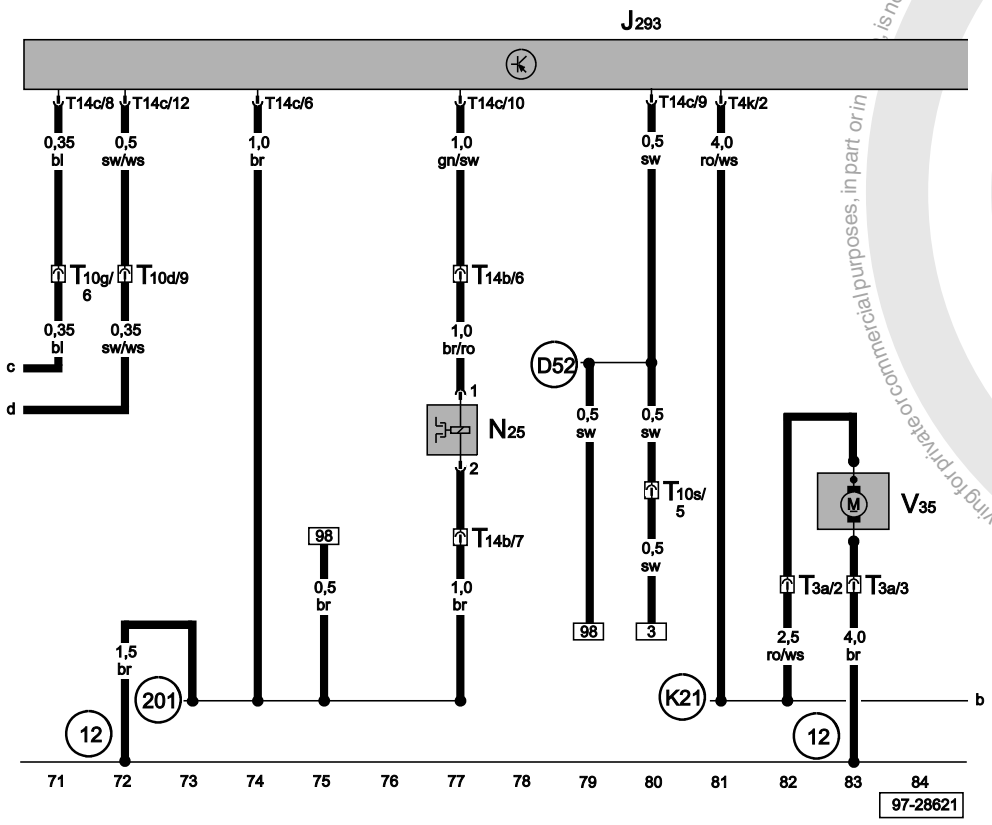

ws	=	white
sw	=	black
ro	=	red
br	=	brown
gn	=	green
bl	=	blue
gr	=	grey
li	=	purple
ge	=	yellow
or	=	orange
rs	=	pink

Protected by copyright. Copying for private or commercial purposes, in part or in is not permitted unless authorised by Volkswagen AG. Volkswagen AG does not guarantee or accept any liability with respect to the correctness of information in this document. Copyright by Volkswagen AG.
satelettronica

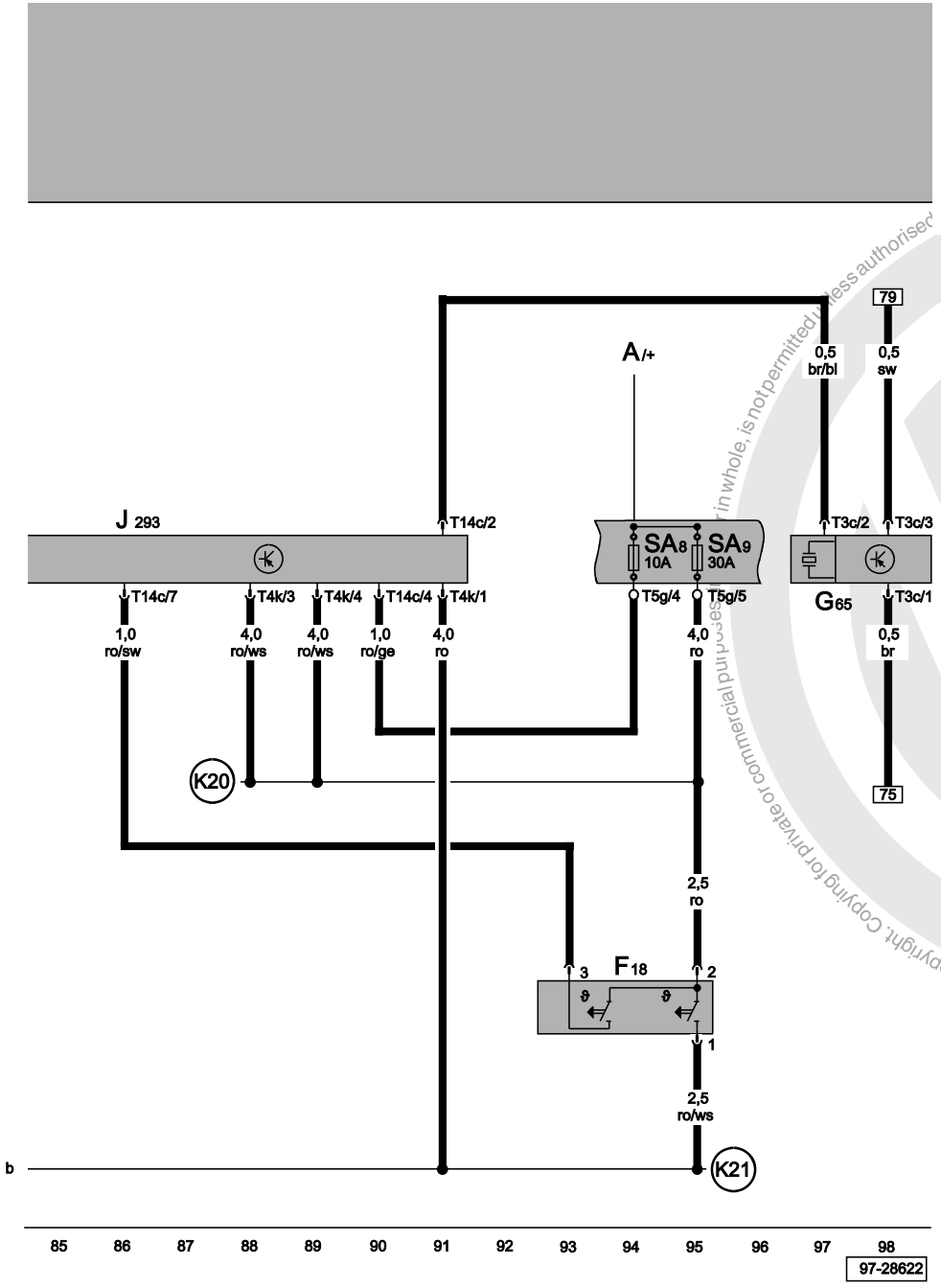

Radiator fan control unit, radiator fan thermo-switch, high pressure sender

A	Battery
F18	Radiator fan thermo-switch
G65	High pressure sender
J293	Radiator fan control unit, in engine compartment, front left
SA8	Fuse -8- (30) in battery fuse box
SA9	Fuse -9- (30), in battery fuse box
T3c	3-pin connector
T4k	4-pin connector
T5g	5-pin connector
T14c	14-pin connector
K20	Positive (+) connection -1- (30), in radiator fan wiring harness
K21	Connection -1-, in radiator fan wiring harness

ws	=	white
sw	=	black
ro	=	red
br	=	brown
gn	=	green
bl	=	blue
gr	=	grey
li = purple
ge	=	yellow
or	=	orange
rs	=	pink

Protected by copyright. Copying for private or commercial purposes, in whole, is not permitted unless authorised. Volkswagen AG. Volkswagen AG does not guarantee or accept any liability with respect to the correctness of information in this document. Copyright by Volkswagen AG.
satelettronica

⇒ Anti-theft alarm system
⇒ Interior monitoring
From October 1999

For alternatives to relay and fuse positions as well as multi-pin connector wiring - see "Fitting locations" section.

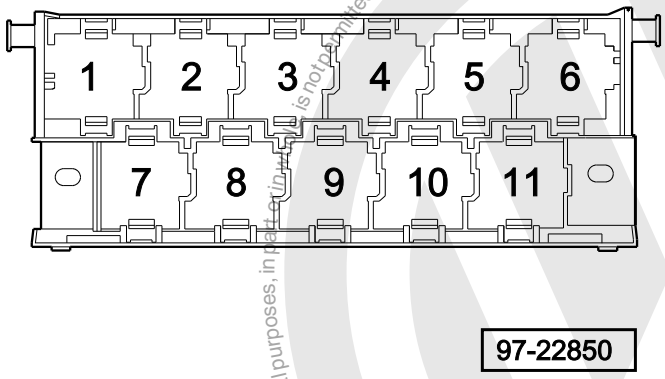

Fuse colours

30 A - green
25 A - white
20 A - yellow
15 A - blue
10 A - red
7.5 A - brown
5 A - beige
3 A - purple

Protected by copyright. Copying for private or commercial purposes, in part or in whole, is not permitted unless authorised by Volkswagen AG. Volkswagen AG does not guarantee or accept any liability with respect to the correctness of information in this document. Copyright by Volkswagen AG.

satelettronica

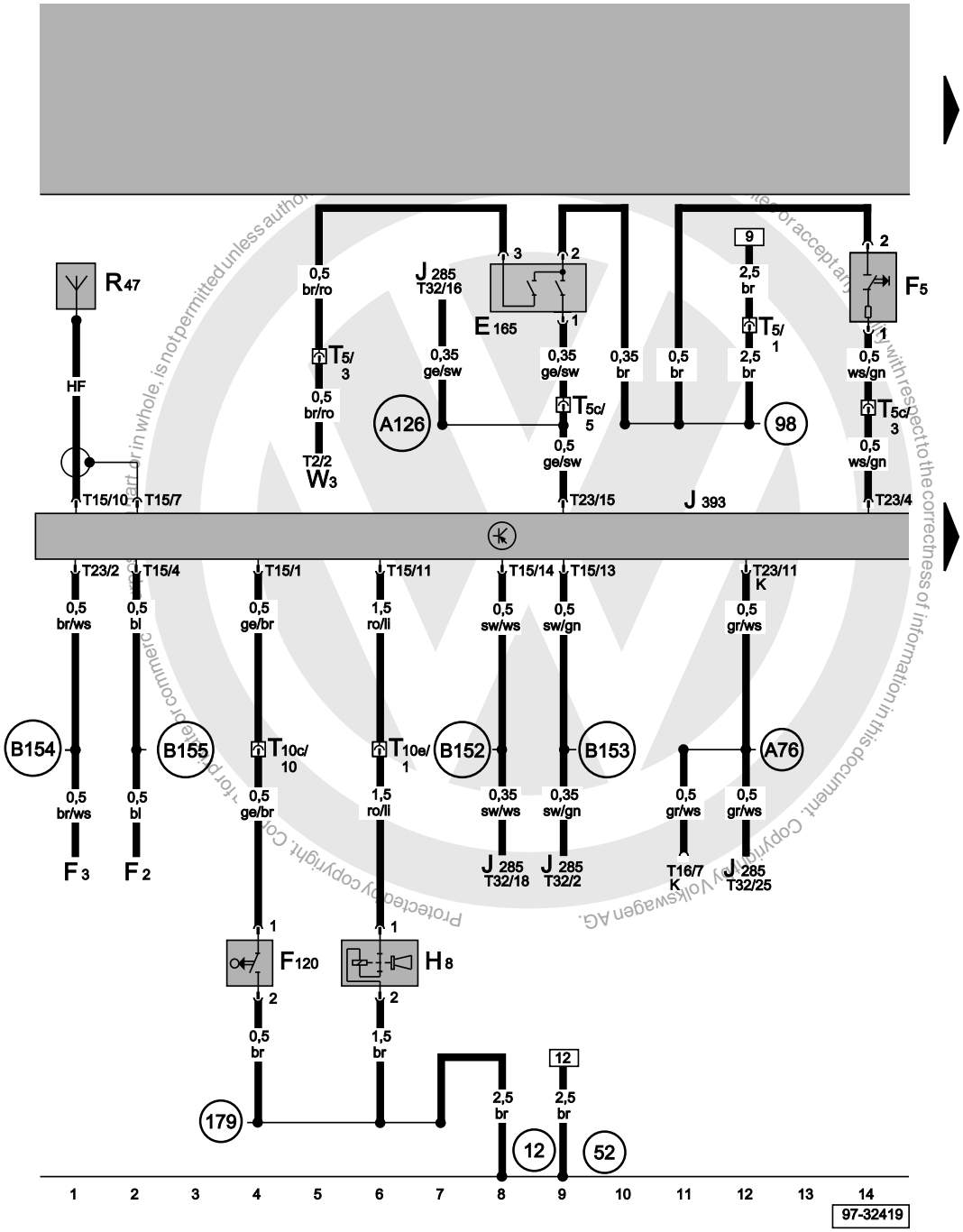

Convenience system central control unit, anti-theft alarm system horn, anti-theft alarm system contact switch, luggage compartment light switch, tailgate/boot lid release switch

E165	Tailgate/boot lid release switch
F2	Door contact switch, driver's side
F3	Door contact switch, front passenger's side
F5	Luggage compartment light switch
F120	Anti-theft alarm system contact switch
H8	Anti-theft alarm system horn
J285	Control unit with display in dash panel insert
J393	Convenience system central control unit
R47	Central locking and anti-theft alarm system
T5	5-pin connector, brown, in rear lid prewiring wiring harness
W3	Luggage compartment light
12	Earth point, in engine compartment, left
52	Earth point, in tailgate/boot lid, left
98	Earth connection, in tailgate/boot lid wiring harness
179	Earth connection, in left headlight wiring harness
A76	Connection (diagnosis wire K), in dash panel wiring harness
A126	Connection (tailgate/boot lid contact switch), in dash panel wiring harness
B152	Connection (BL (turn signal, left)), in interior wiring harness
B153	Connection (BR (turn signal, right)), in interior wiring harness
B154	Connection -1- (TK (door contact)), in interior wiring harness
B155	Connection -2- (TK (door contact)), in interior wiring harness

ws	=	white
sw	=	black
ro	=	red
br	=	brown
gn	=	green
bl	=	blue
gr	=	grey
li	=	purple
ge	=	yellow
or	=	orange
rs	=	pink

satelettronica

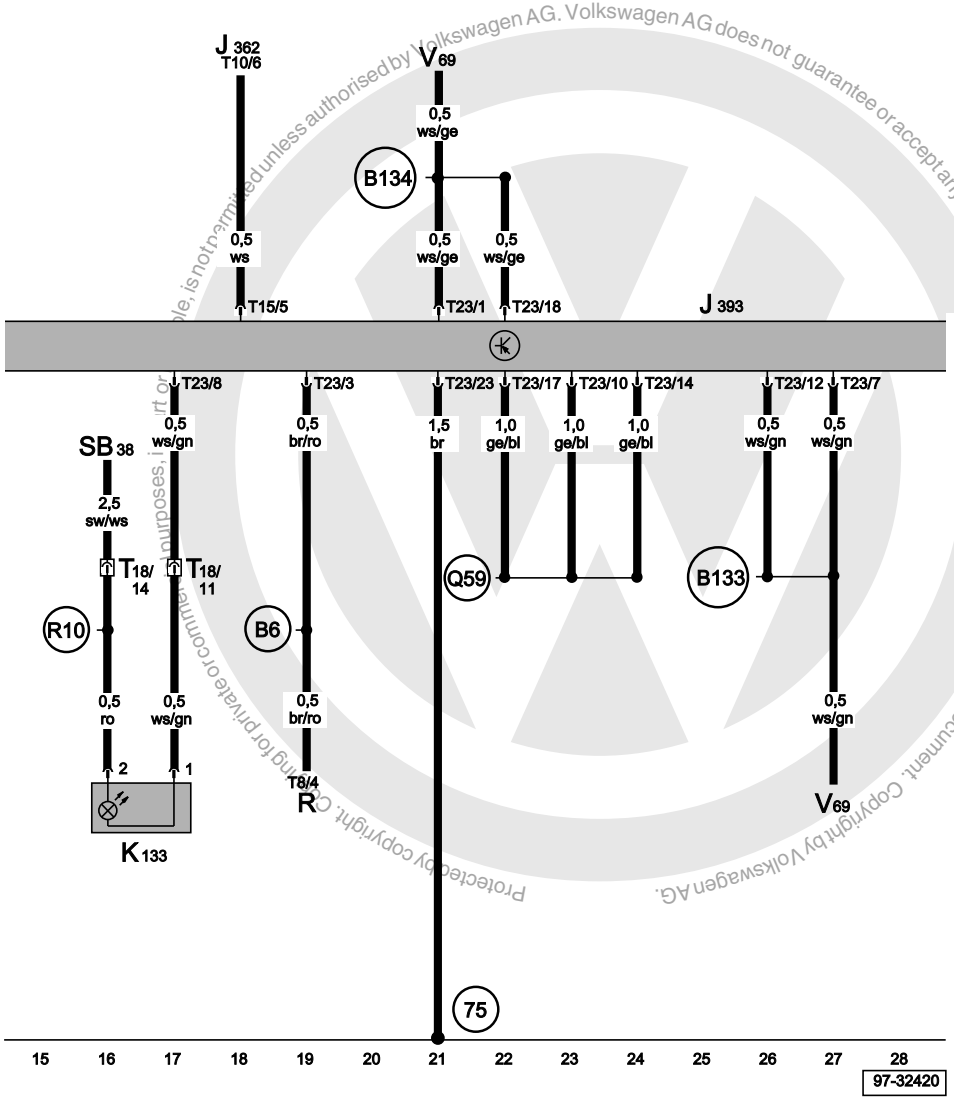

Convenience system central control unit, anti-theft alarm system, central locking warning lamp -SAFE-

J362	Immobilizer control unit, next to steering column
J393	Convenience system central control unit
K133	Central locking warning lamp -SAFE-
R	Radio
SB38	Fuse -38- on fuse box
T8	8-pin connector
T10	10-pin connector
T15	15-pin connector
T18	18-pin connector, in driver's door
T23	23-pin connector
V69	Central locking pump with control unit
75	Earth point, rear pillar, right
B6	Connection (S), in steering column switch wiring harness
B133	Connection (central locking open), in interior wiring harness
B134	Connection (central locking closed), in interior wiring harness
R10	Positive (+) connection -1- (30), in door wiring harness - driver's side
Q59	Connection (country coding), in ATA wiring harness

ws	=	white
sw	=	black
ro	=	red
br	=	brown
gn	=	green
bl	=	blue
gr	=	grey
li	=	purple
ge	=	yellow
or	=	orange
rs	=	pink

Protected by copyright. Copying for private or commercial purposes, in part or in whole, is not permitted unless authorised by Volkswagen AG. Volkswagen AG does not guarantee or accept any liability with respect to the correctness of information in this document. Copyright by Volkswagen AG.

satelettronica

Convenience system central control unit, anti-theft alarm system, interior monitoring sensor, interior monitoring sender, self-diagnosis connection

E267	Interior monitoring deactivation switch
G209	Anti-theft alarm ultra-sonic sensor, rear B-pillar driver's side
J393	Convenience system central control unit
T4	4-pin connector, on interior monitoring deactivation switch
T8	8-pin connector
T9	9-pin connector, near interior light
T15	15-pin connector
T16	16-pin connector, self-diagnosis connection
T23	23-pin connector
W	Interior light, front
76	Earth point, near selector mechanism
105	Earth connection -1-, in central locking wiring harness
223	Earth connection -1-, in ATA wiring harness
A66	Connection (30a, central locking/anti-theft alarm system/infra-red remote control), in dash panel wiring harness
A76	Connection (diagnosis wire K), in dash panel wiring harness
Q52	Connection (door contact switch), in ATA wiring harness

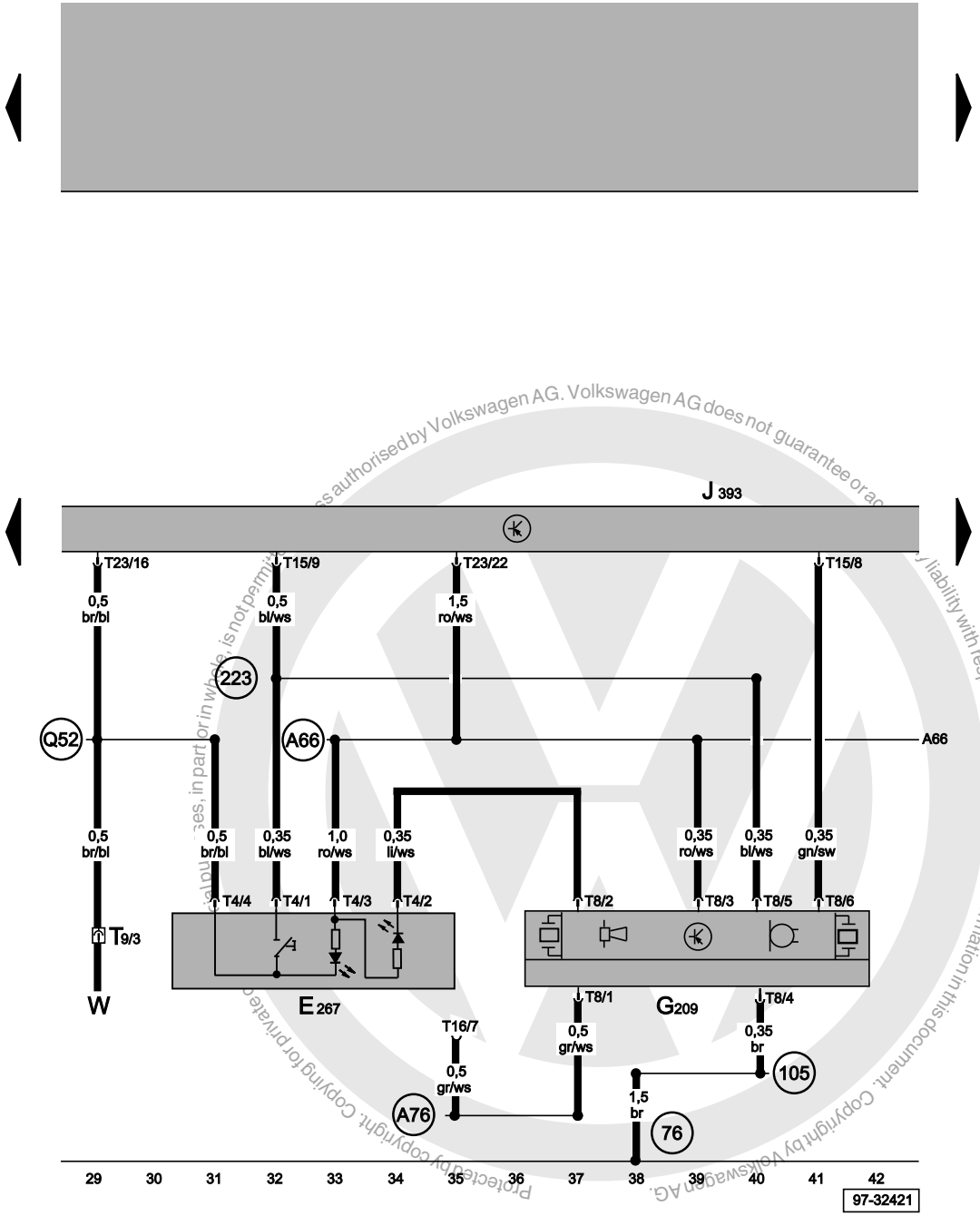

ws	=	white
sw	=	black
ro	=	red
br	=	brown
gn	=	green
bl	=	blue
gr	=	grey
li	=	purple
ge	=	yellow
or	=	orange
rs	=	pink

satelettronica

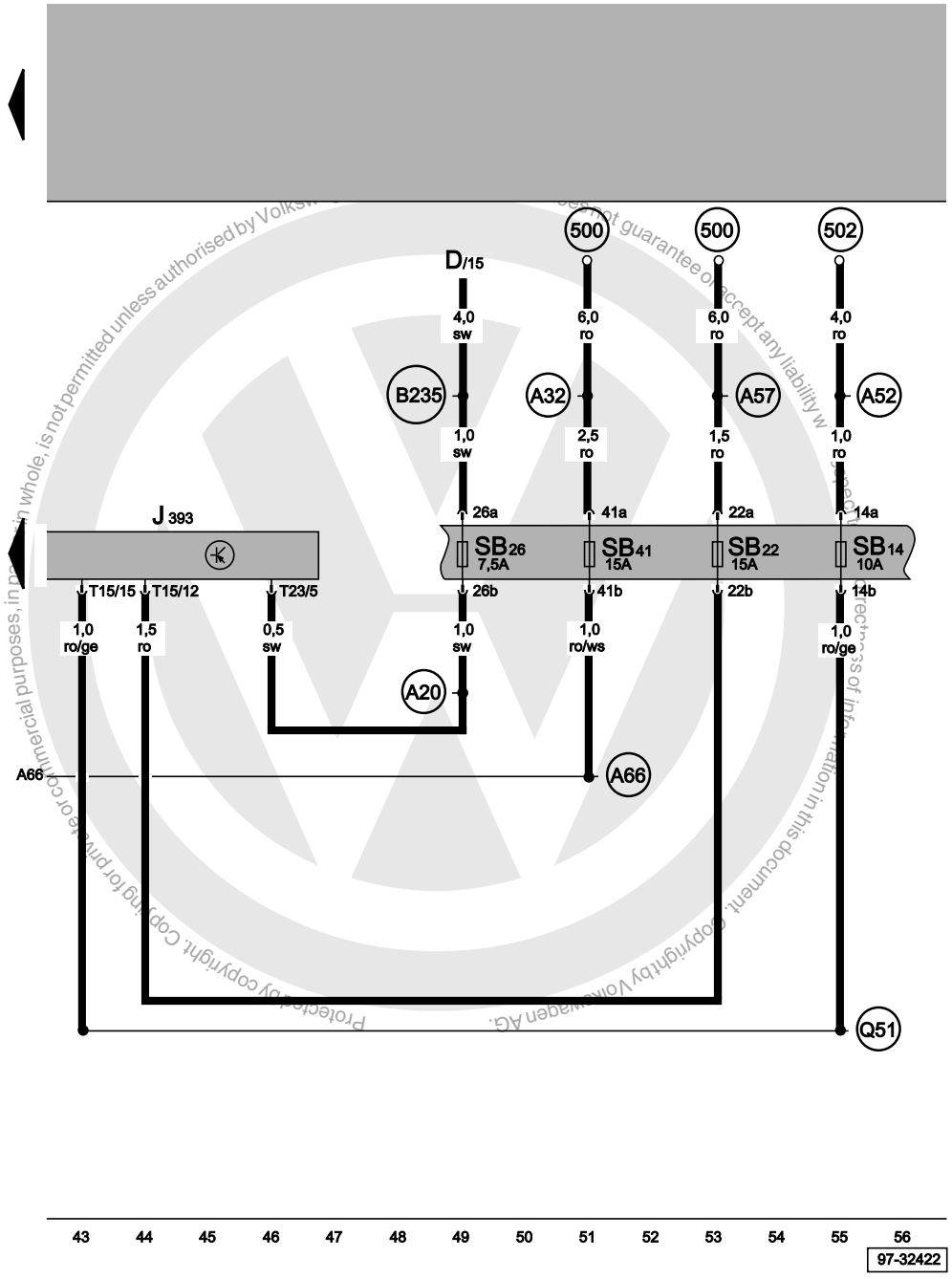

Convenience system central control unit, fuses

D	Ignition/starter switch
J393	Convenience system central control unit
SB14	Fuse -14- in fuse box
SB22	Fuse -22- in fuse box
SB26	Fuse -26- in fuse box
SB41	Fuse -41- in fuse box
T15	15-pin connector
T23	23-pin connector
500	Screw connection -1- (30), on relay plate
502	Screw connection -1- (30a), on relay plate
A20	Connection (15a), in dash panel wiring harness
A32	Positive (+) connection (30), in dash panel wiring harness
A52	Positive (+) connection -2- (30), in dash panel wiring harness
A57	Positive (+) connection -3- (30), in dash panel wiring harness
A66	Connection (30a, central locking/anti-theft alarm system/infra-red remote control), in dash panel wiring harness
B235	Positive (+) connection -4- (15a), in interior wiring harness
Q51	Positive (+) connection (30), in anti-theft alarm system wiring harness

ws	=	white
sw	=	black
ro	=	red
br	=	brown
gn	=	green
bl	=	blue
gr	=	grey
li	=	purple
ge	=	yellow
or	=	orange
rs	=	pink

satelettronica

Central locking

From October 1999

For alternatives to relay and fuse positions as well as multi-pin connector wiring - see "Fitting locations" section.

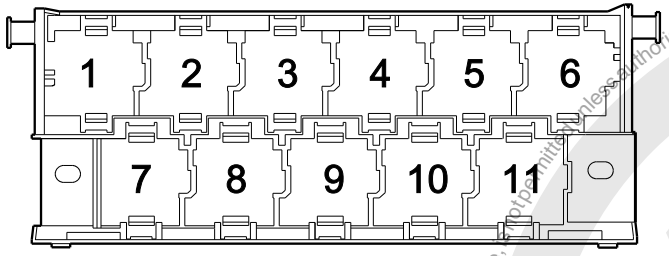

97-22850

Fuse colours

30 A - green
25 A - white
20 A - yellow
15 A - blue
10 A - red
7.5 A - brown
5 A - beige
3 A - lilac

Protected by copyright. Copying for private or commercial purposes, in part or in whole, is not permitted unless authorised by Volkswagen AG. Volkswagen AG does not guarantee or accept any liability with respect to the correctness of information in this document. Copyright by Volkswagen AG.

satelettronica

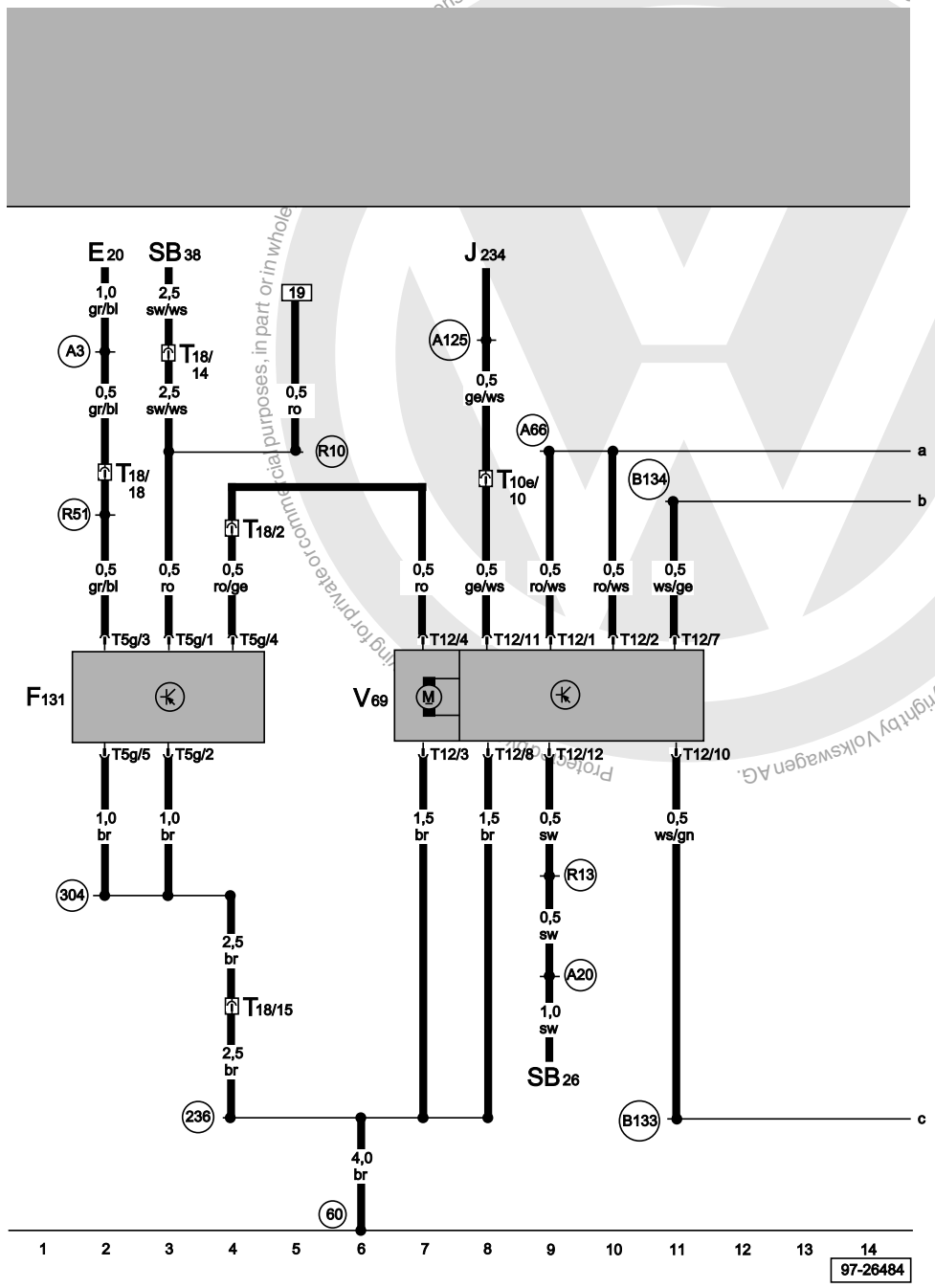

ws	=	white
sw	=	black
ro	=	red
br	=	brown
gn	=	green
bl	=	blue
gr	=	grey
li	=	purple
ge	=	yellow
or	=	orange
rs	=	pink

Central locking pump with control unit, central locking actuator

E20	Switches and instruments - lighting control
F131	Central locking actuator, front left
J234	Airbag control unit, behind console
SB26	Fuse -26- in relay plate fuse box
SB38	Fuse -38- in relay plate fuse box
T5g	5-pin connector
T10e	10-pin connector, light pink
T12	12-pin connector
T18	18-pin connector, in driver's door
V69	Central locking pump with control unit
60	Earth point -2-, near right tail light
236	Earth connection -2-, in electric windows/central locking and convertible top wiring harness
304	Earth connection -3-, in door wiring harness - driver's side
A3	Positive (+) connection (58), in dash panel wiring harness
A20	Connection (15a), in dash panel wiring harness
A66	Connection (30a, CL/A.TWS/IR), in dash panel wiring harness
A125	Connection (crash signal), in dash panel wiring harness
B133	Connection (central locking open), in interior wiring harness
B134	Connection (central locking closed), in interior wiring harness
R10	Positive (+) connection -1- (30), in door wiring harness - driver's side
R13	Positive (+) connection -4- (15), in door wiring harness - driver's side
R51	Positive (+) connection (58b), in door wiring harness - driver's side

satelettronica

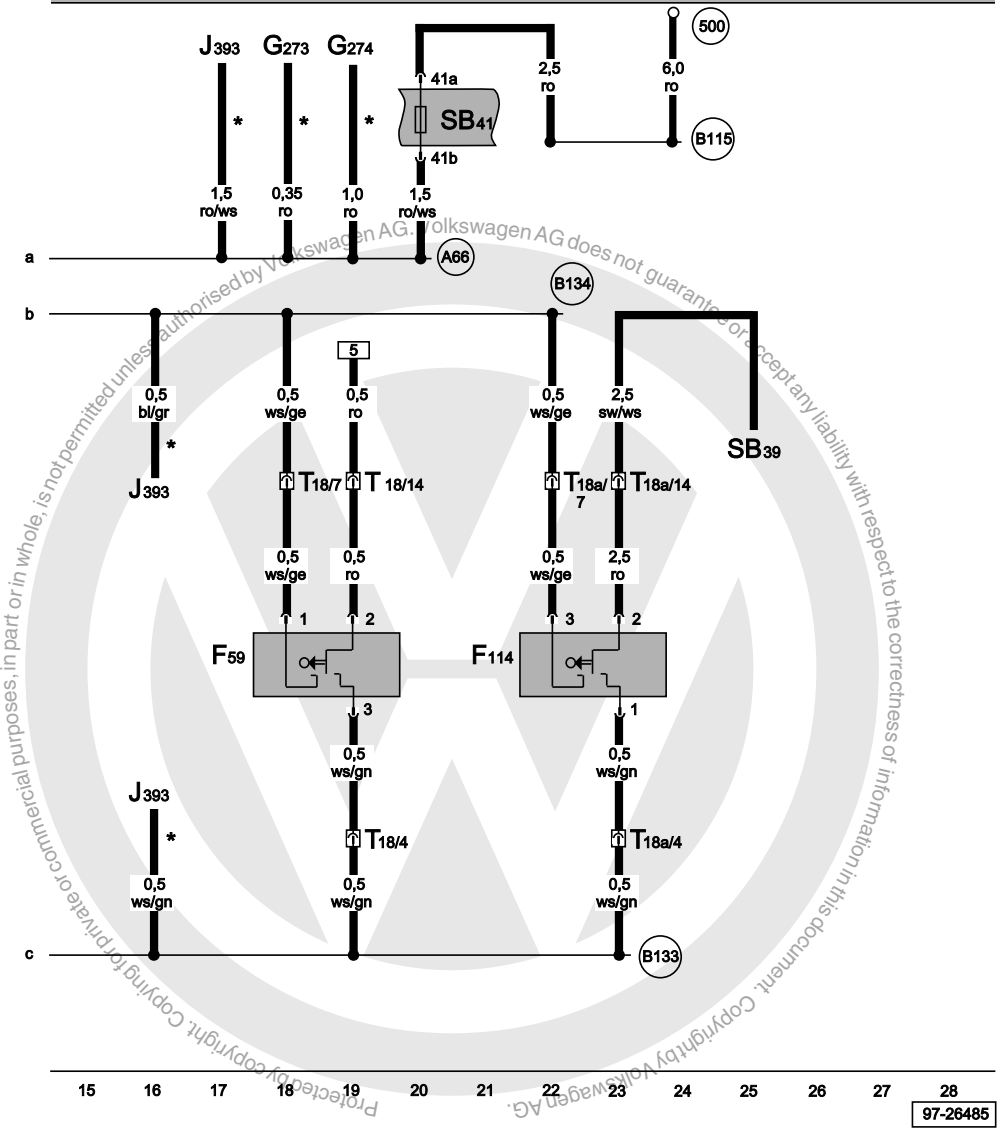

Tailgate/boot lid central locking switch (driver's side), tailgate/boot lid central locking switch (front passenger's side)

F59	Tailgate/boot lid central locking switch (driver's side)
F114	Tailgate/boot lid central locking switch (front passenger's side)
J393	Convenience system central control unit, behind dash panel, left
G273	Interior monitoring sensor
G274	Interior monitoring sensor
SB41	Fuse -41- in relay plate fuse box
T18	18-pin connector, in driver's door
T18a	18-pin connector, in front passenger's door
500	Screw connection -1- (30), on relay plate
A66	Connection (30a, CL/A.TWS/IR), in dash panel wiring harness
B115	Positive (+) connection (30, central electrics), in interior wiring harness
B133	Connection (central locking open), in interior wiring harness
B134	Connection (central locking closed), in interior wiring harness
*	Only models with anti-theft alarm system

ws	=	white
sw	=	black
ro	=	red
br	=	brown
gn	=	green
bl	=	blue
gr	=	grey
li	=	purple
ge	=	yellow
or	=	orange
rs	=	pink

Protected by copyright. Copying for private or commercial purposes, in part or in whole, is not permitted unless authorised by Volkswagen AG. Volkswagen AG does not guarantee or accept any liability with respect to the correctness of information in this document. Copyright by Volkswagen AG.

satelettronica

Radio navigation with CD changer

From October 1999

For alternatives to relay and fuse positions as well as multi-pin connector wiring - see "Fitting locations" section.

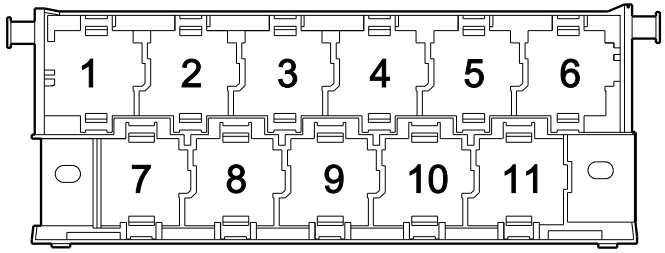

97-22850

Fuse colours

30 A - green
25 A - white
20 A - yellow
15 A - blue
10 A - red
7.5 A - brown
5 A - beige
3 A - lilac

Protected by copyright. Copying for private or commercial purposes, in part or in whole, is not permitted unless authorised by Volkswagen AG. Volkswagen AG does not guarantee or accept any liability with respect to the correctness of information in this document. Copyright by Volkswagen AG.

satelettronica

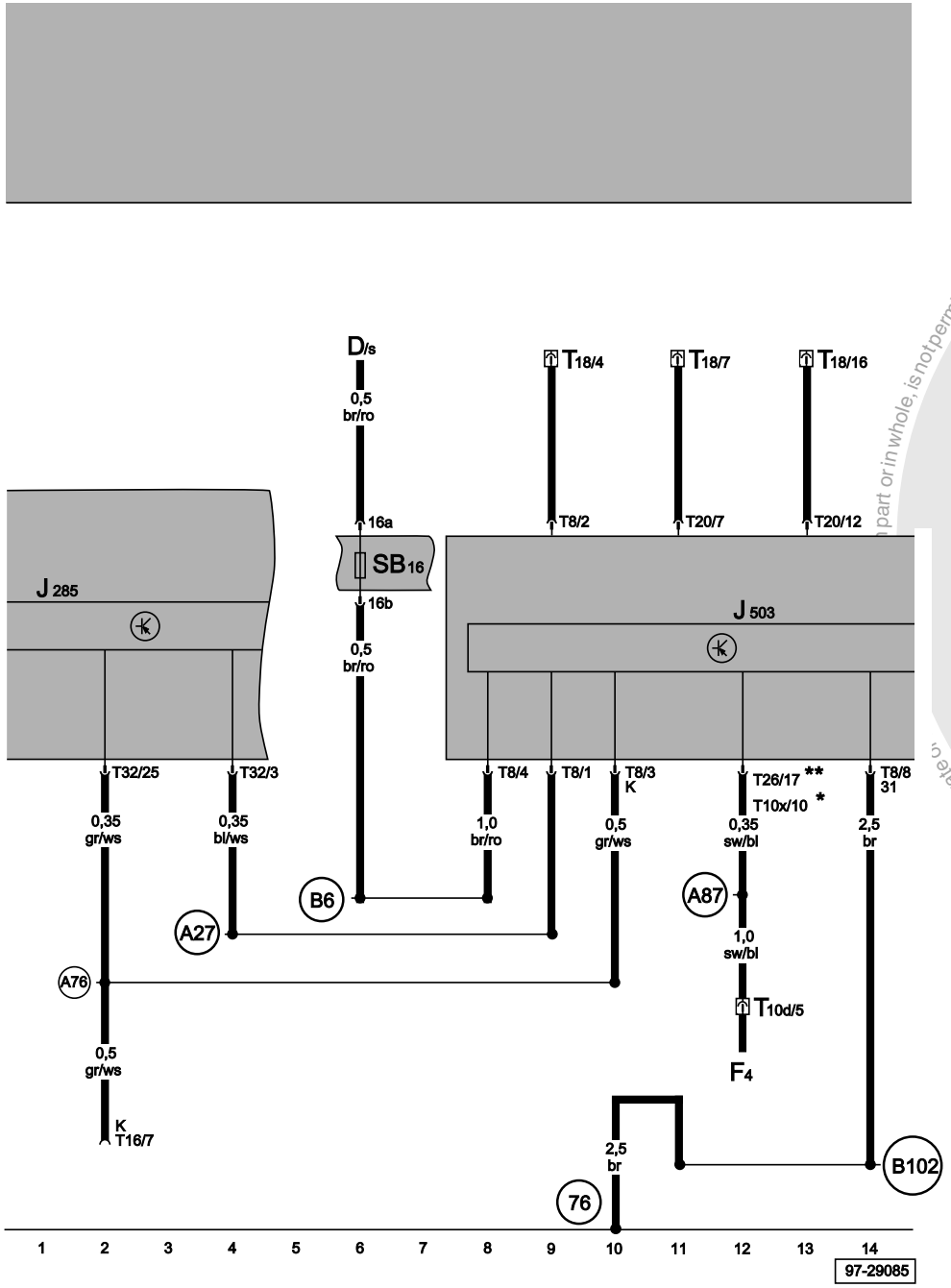

Control unit with display for radio and navigation, dash panel insert

D	Ignition/starter switch
F4	Reversing light switch
J285	Control unit with display in dash panel insert
J503	Control unit with display for radio and navigation
SB16	Fuse -16- in fuse box
T8	8-pin connector
T10d	10-pin connector, red, connector point under relay carrier
T10x	10-pin connector
T16	16-pin connector, self-diagnosis connection
T18	18-pin connector, VDA connector, under driver's seat (preperation for telephone)
T26	26-pin connector
T32	32-pin connector, blue
76	Earth point, near selector mechanism
A27	Connection (speed signal), in dash panel wiring harness
A76	Connection (diagnosis wire K), in dash panel wiring harness
A87	Connection (RL), in dash panel wiring harness
B6	Connection (S), in steering column switch wiring harness
B102	Earth connection, in front left interior wiring harness
*	Only radio navigation system with black and white display
**	Only radio navigation system with colour display

ws	=	white
sw	=	black
ro	=	red
br	=	brown
gn	=	green
bl	=	blue
gr	=	grey
li	=	purple
ge	=	yellow
or	=	orange
rs	=	pink

Protected by copyright. Copying for private or commercial purposes, in part or in whole, is not permitted unless authorised by Volkswagen AG. Volkswagen AG does not guarantee or accept any liability with respect to the correctness of information in this document. Copyright by Volkswagen AG.
satelettronica

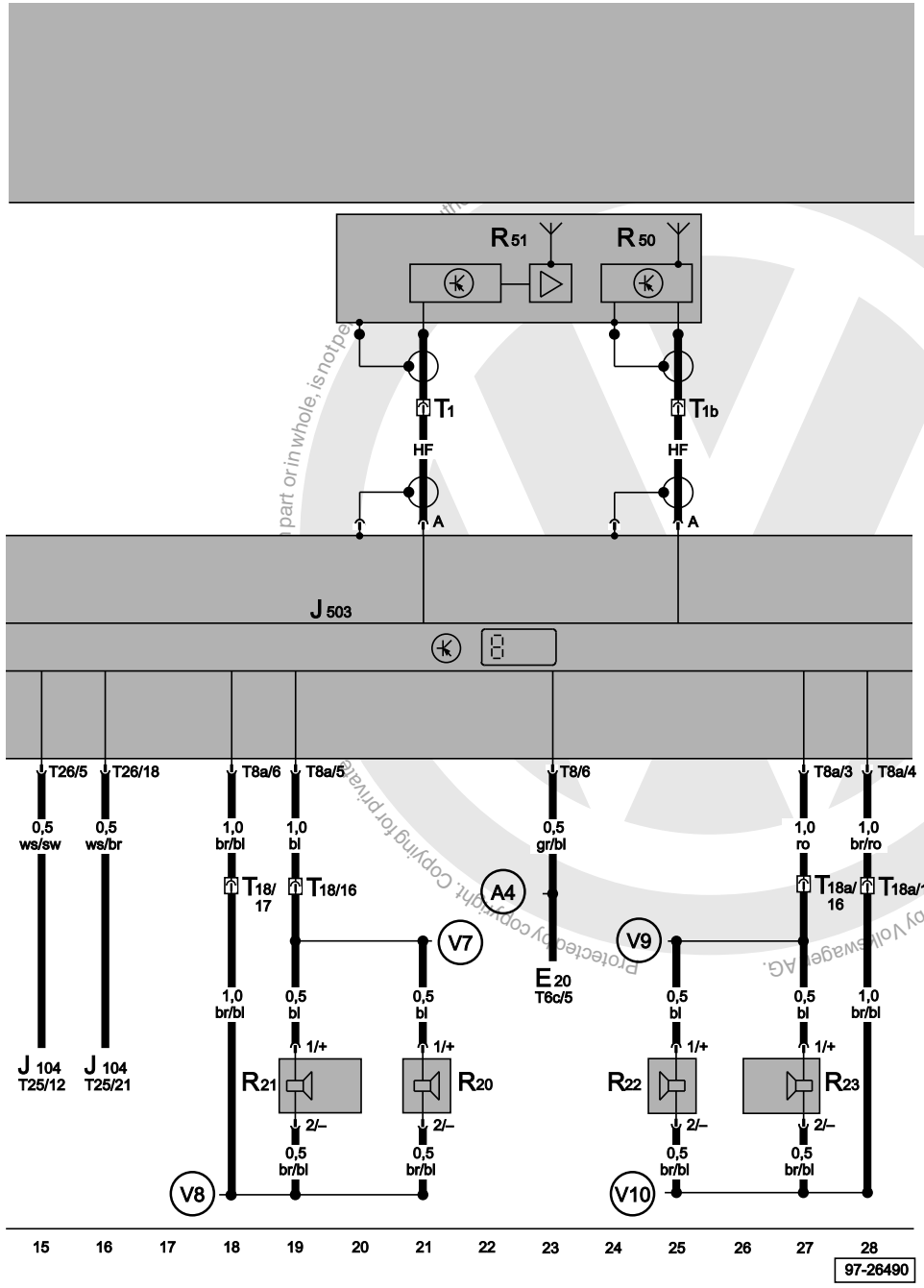

Control unit with display for radio and navigation, loudspeaker front, radio/telephone aerial, navigation aerial (GPS)

E20	Switches and instruments, lighting control
J104	ABS/ABS with EDL control unit, in engine compartment, left
J503	Control unit with display for radio and navigation
R20	Treble loudspeaker, front left, in door
R21	Bass loudspeaker, front left, in door
R22	Treble loudspeaker, front right, in door
R23	Bass loudspeaker, front right, in door
R50	Navigation aerial (GPS)
R51	Antenna per radio/telephone
T1	Single connector, near sunroof aerial
T1b	Single connector, near roof aerial
T6c	6-pin connector
T8	8-pin connector
T8a	8-pin connector
T18	18-pin connector, in driver's door
T18a	18-pin connector, in front passenger's door
T25	25-pin connector
T26	26-pin connector
A4	Positive (+) connection (58b), in dash panel wiring harness
V7	Positive (+) connection (positive, loudspeaker FL), in loudspeaker wiring harness
V8	Positive (+) connection (negative, loudspeaker FL), in loudspeaker wiring harness
V9	Positive (+) connection (positive, loudspeaker FR), in loudspeaker wiring harness
V10	Positive (+) connection (negative, loudspeaker FR), in loudspeaker wiring harness

ws	=	white
sw	=	black
ro	=	red
br	=	brown
gn	=	green
bl	=	blue
gr	=	grey
li	=	purple
ge	=	yellow
or	=	orange
rs	=	pink

satelettronica

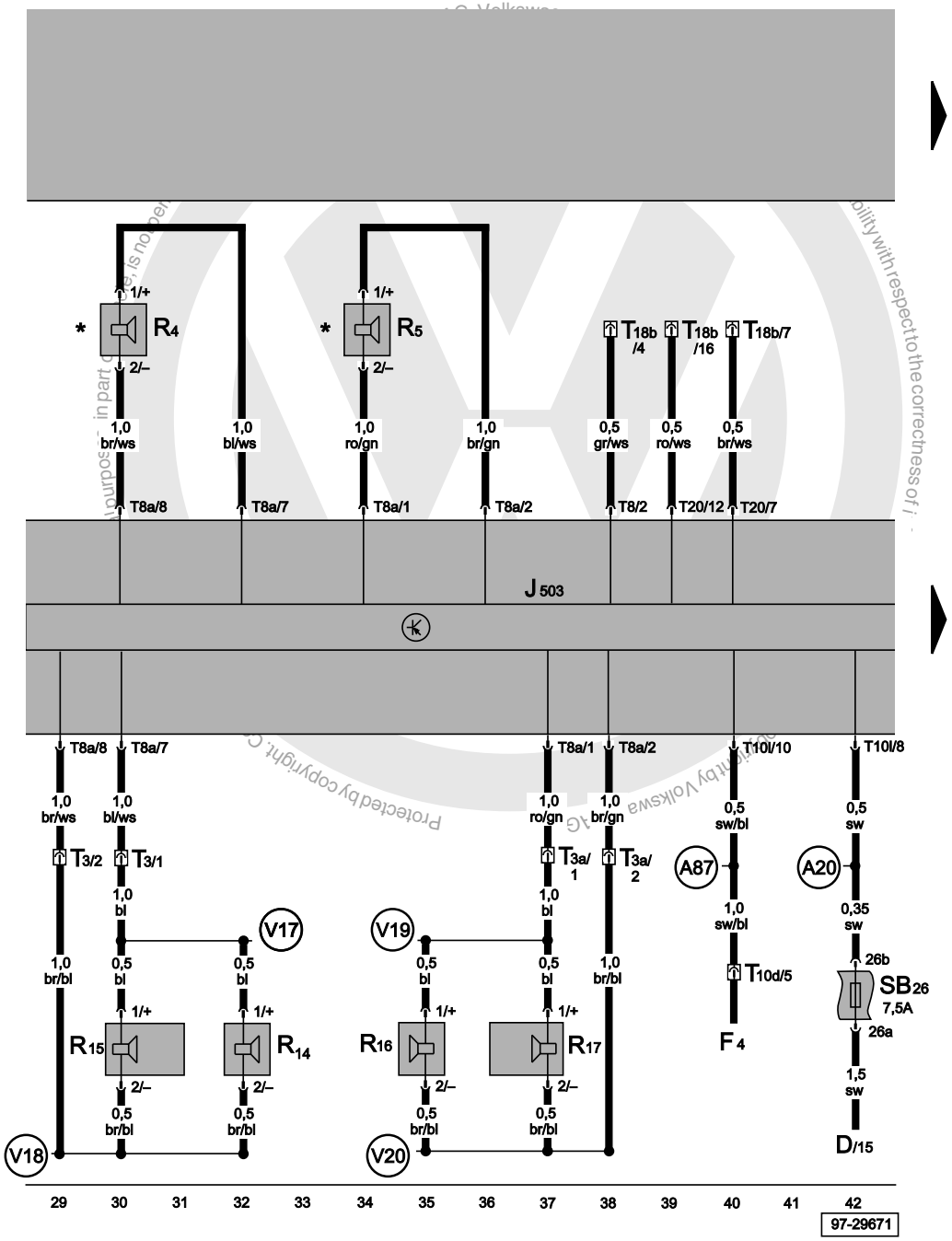

Control unit with display for radio and navigation, rear loudspeakers

D	Ignition/starter switch
F4	Reversing light switch
J503	Control unit with display for radio and navigation
R4	Loudspeaker, rear left
R5	Loudspeaker, rear right
R14	Treble loudspeaker, rear left, in door
R15	Bass loudspeaker, rear left, in door
R16	Treble loudspeaker, rear right, in door
R17	Bass loudspeaker, rear right, in door
SB26	Fuse -26- on fuse box
T3	3-pin connector
T3a	3-pin connector
T8	8-pin connector
T8a	8-pin connector
T10d	10-pin connector, red, connector point under relay carrier
T10l	10-pin connector, red
T18b	18-pin connector, VDA connector, under front passenger's seat
A20	Connection (15a), in dash panel wiring harness
A87	Connection (RL), in dash panel wiring harness
V17	Connection (positive, rear left loudspeaker), in speaker wiring harness
V18	Connection (negative, rear left loudspeaker), in speaker wiring harness
V19	Connection (positive, rear right loudspeaker), in speaker wiring harness
V20	Connection (negative, rear right loudspeaker), in speaker wiring harness
*	Only models with two doors only

ws	=	white
sw	=	black
ro	=	red
br	=	brown
gn	=	green
bl	=	blue
gr	=	grey
li	=	purple
ge	=	yellow
or	=	orange
rs	=	pink

satelettronica

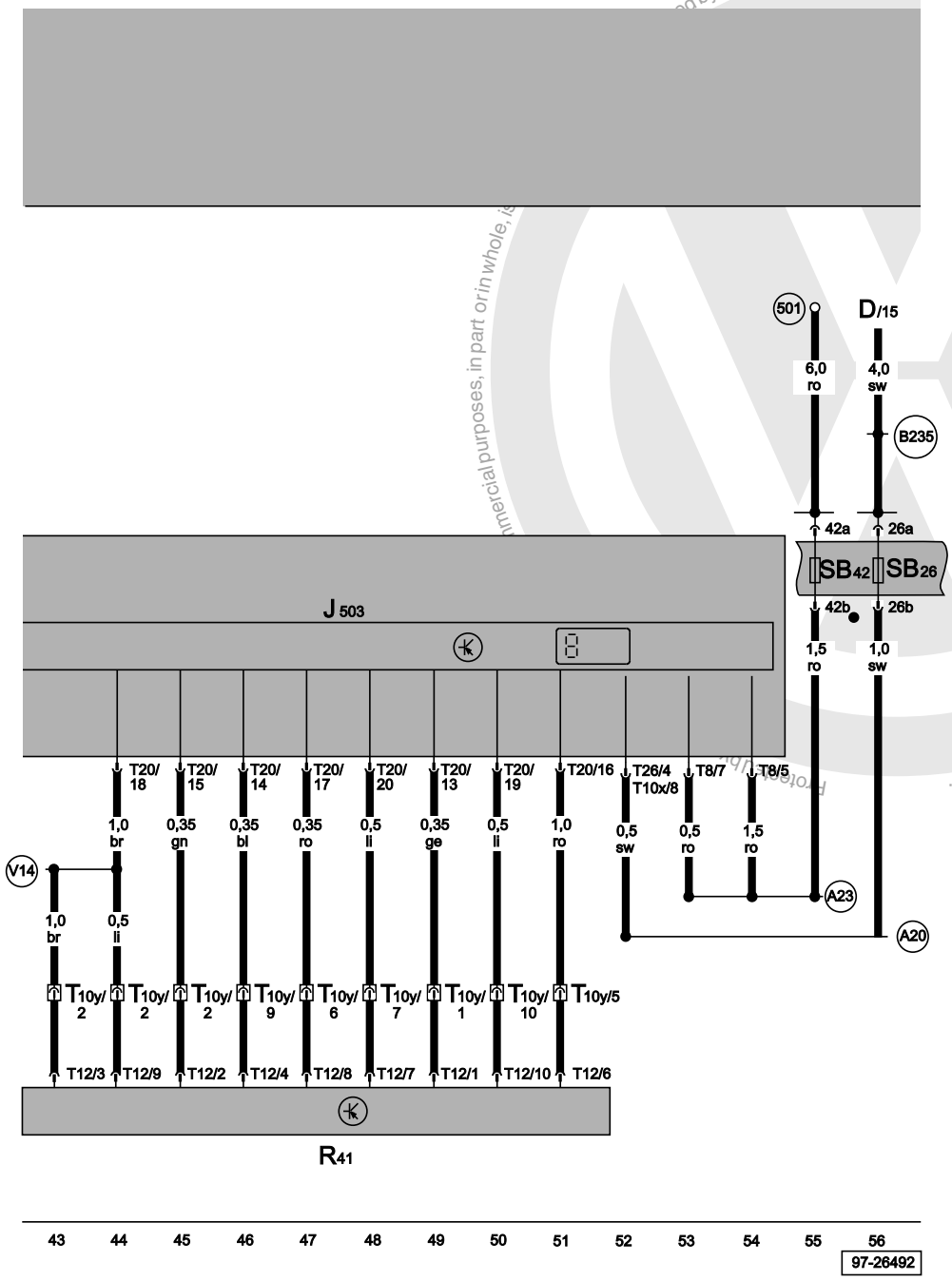

Control unit with display unit for radio and navigation, CD changer

D	Ignition/starter switch
J503	Control unit with display for radio and navigation
R41	CD changer*
SB26	Fuse -26- on fuse holder
SB42	Fuse -42- on fuse holder
T10x	10-pin connector
T10y	10-pin connector, lilac
T8	8-pin connector
T12	12-pin connector
T20	20-pin connector, blue (LINE)
T26	26-pin connector
(501)	Screw connection -2- (30), on relay plate
(A20)	Connection (15a), in dash panel wiring harness
(A23)	Connection (30a), in dash panel wiring harness
(B235)	Positive connection -4- (15a), in interior wiring harness
(V14)	Connection (screening), in CD changer wiring harness
*	For vehicles with CD changer only

ws	=	white
sw	=	black
ro	=	red
br	=	brown
gn	=	green
bl	=	blue
gr	=	grey
li	=	purple
ge	=	yellow
or	=	orange
rs	=	pink

satelettronica

Protected by copyright. Copyright by Volkswagen AG. Volkswagen AG does not guarantee or accept any liability with respect to the correctness of information in this document. Copyright by Volkswagen AG. Duplicate or commercial use is not permitted unless authorised by Volkswagen AG, in part or in whole, is not permitted unless authorised by Volkswagen AG.

Radio systems

⇒ beta
⇒ beta with CD-changer
⇒ gamma
⇒ gamma with CD-changer

From October 1999

For alternatives to relay and fuse positions as well as multi-pin connector wiring - see "Fitting locations" section.

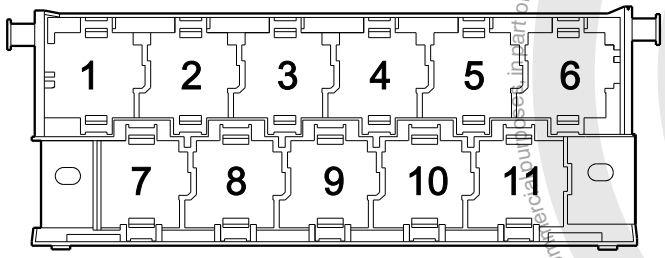

97-22850

Fuse colours

30 A - green
25 A - white
20 A - yellow
15 A - blue
10 A - red
7.5 A - brown
5 A - beige
3 A - lilac

satelettronica

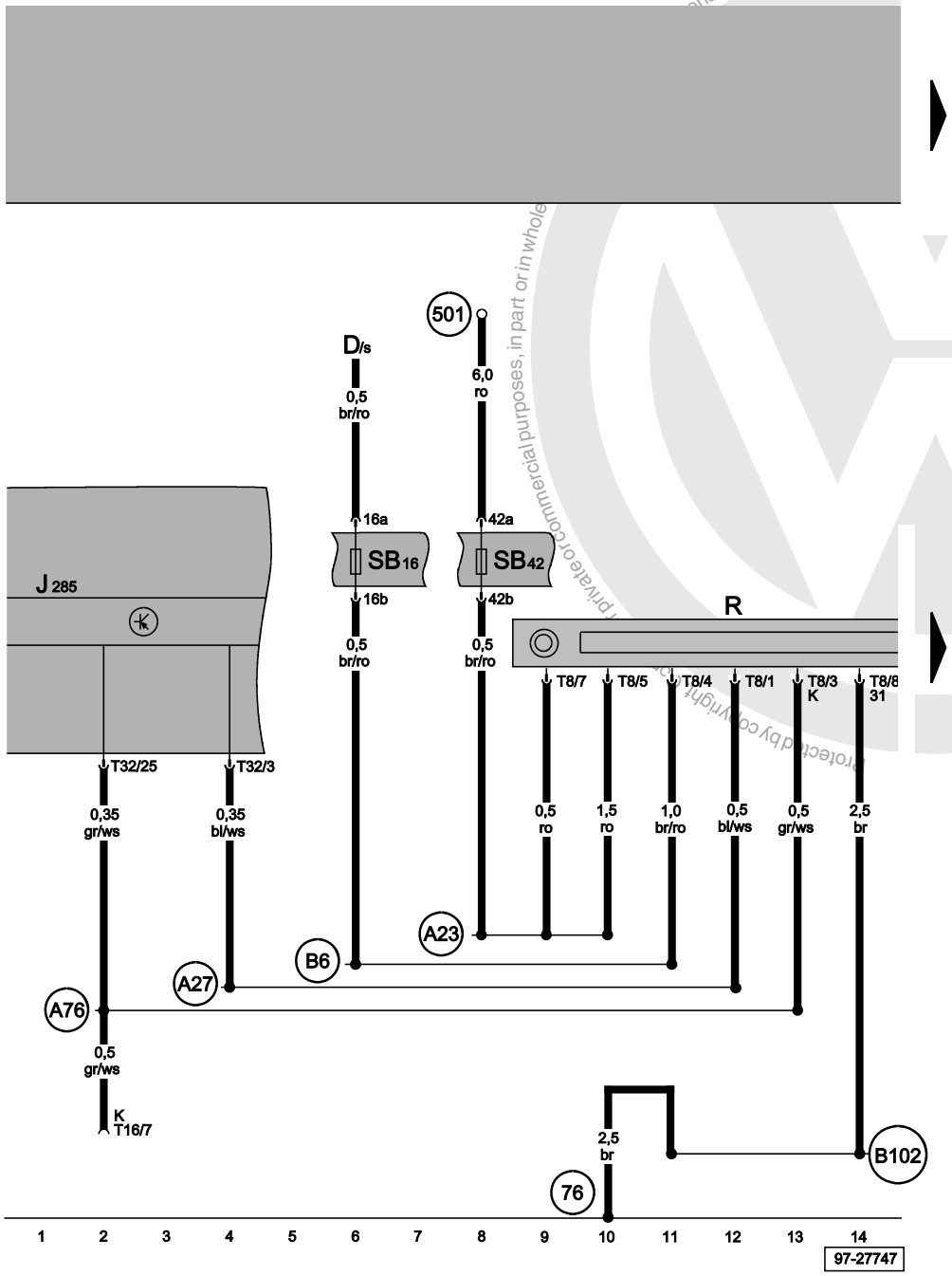

Radio, dash panel insert

D	Ignition/starter switch
J285	Control unit with display in dash panel insert
R	Radio
SB16	Fuse -16- in relay plate fuse box
SB42	Fuse -42- in relay plate fuse box
T8	8-pin connector
T16	16-pin connector, in dash panel centre, self-diagnosis connection
T32	32-pin connector, blue
76	Earth point, near selector mechanism
501	Screw connection -2- (30), on relay plate
A23	Connection (30a), in dash panel wiring harness
A27	Connection (speed signal), in dash panel wiring harness
A76	Connection (diagnosis wire K), in dash panel wiring harness
B6	Connection (S), in steering column switch wiring harness
B102	Earth connection, in front left interior wiring harness

ws	=	white
sw	=	black
ro	=	red
br	=	brown
gn	=	green
bl	=	blue
gr	=	grey
li	=	purple
ge	=	yellow
or	=	orange
rs	=	pink

satelettronica

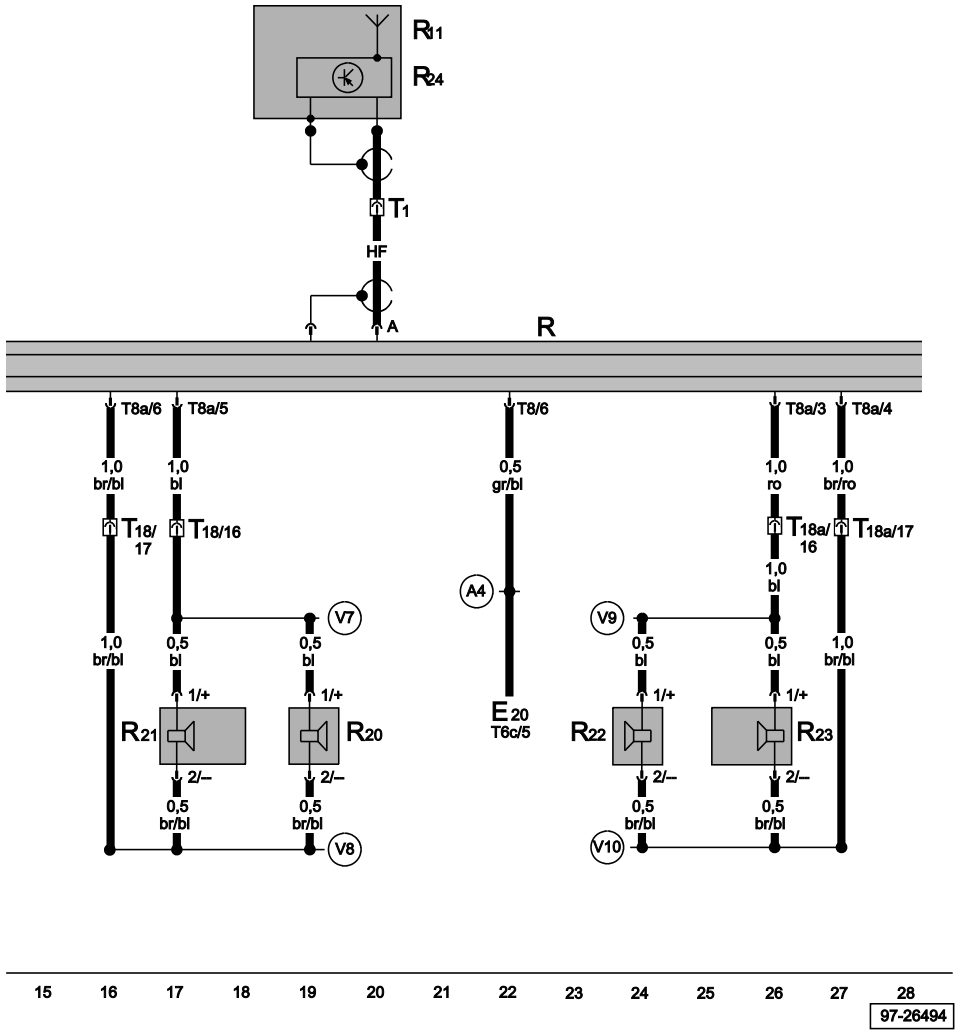

Radio, front loudspeakers, aerial, aerial amplifier

E20	Switches and instruments - lighting control
R	Radio
R11	Aerial
R20	Treble loudspeaker, front left, in door
R21	Bass loudspeaker, front left, in door
R22	Treble loudspeaker, front right, in door
R23	Bass loudspeaker, front right, in door
R24	Aerial amplifier
T1	1-pin connector, near sunroof aerial
T8	8-pin connector
T8a	8-pin connector
T18	18-pin connector, in driver's door
T18a	18-pin connector, in front passenger's door
A4	Positive (+) connection (58b), in dash panel wiring harness
V7	Positive (+) connection (positive, loudspeaker FL), in loudspeaker wiring harness
V8	Positive (+) connection (negative, loudspeaker FL), in loudspeaker wiring harness
V9	Positive (+) connection (positive, loudspeaker FR), in loudspeaker wiring harness
V10	Positive (+) connection (negative, loudspeaker FR), in loudspeaker wiring harness

ws	=	white
sw	=	black
ro	=	red
br	=	brown
gn	=	green
bl	=	blue
gr	=	grey
li	=	purple
ge	=	yellow
or	=	orange
rs	=	pink

Protected by copyright. Copying for private or commercial purposes, in part or in whole, is not permitted unless authorised by Volkswagen AG. Volkswagen AG does not guarantee or accept any liability with respect to the correctness of information in this document. Copyright by Volkswagen AG.
satelettronica

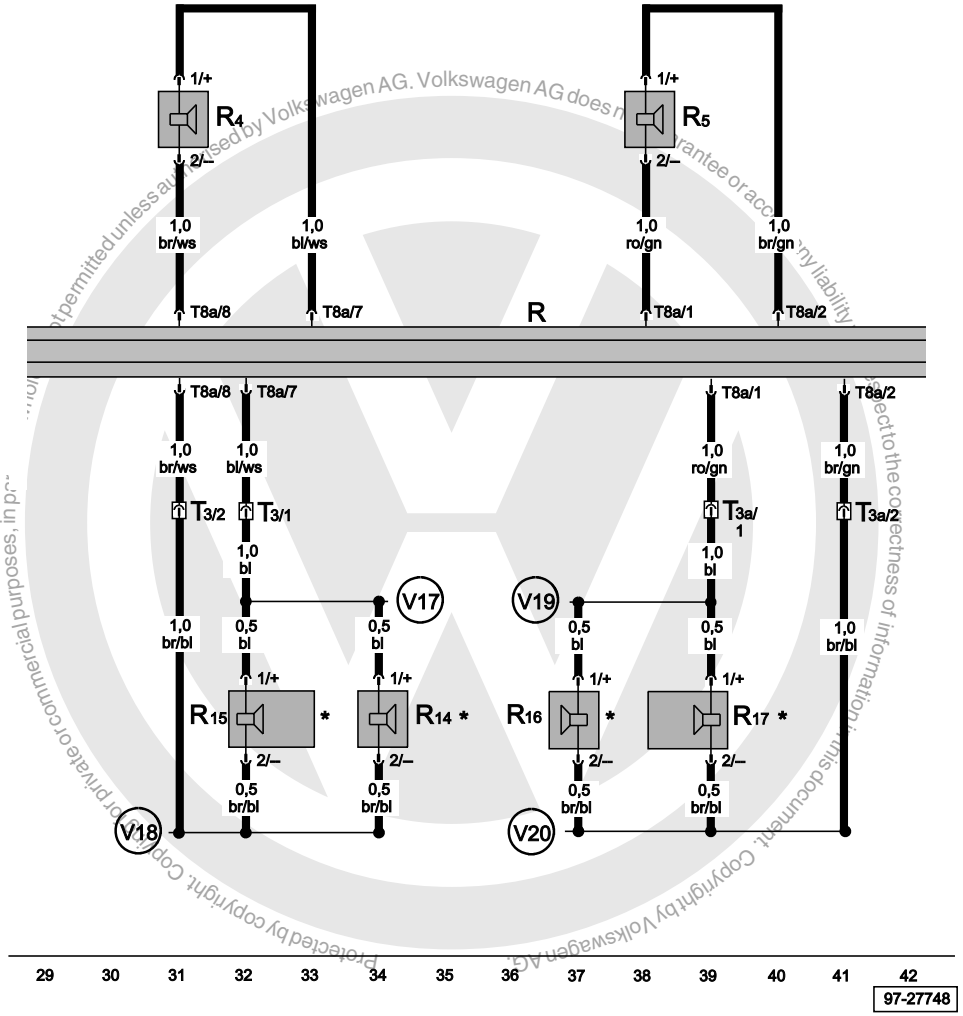

Radio, rear loudspeakers

R4	Rear left loudspeaker
R5	Rear right loudspeaker
R14	Rear left treble loudspeaker, in door
R15	Rear left bass loudspeaker, in door
R16	Rear right treble loudspeaker, in door
R17	Rear right bass loudspeaker, in door
T3	3-pin connector
T3a	3-pin connector
T8a	8-pin connector
V17	Connection (positive, rear left loudspeaker), in speaker wiring harness
V18	Connection (negative, rear left loudspeaker), in speaker wiring harness
V19	Connection (positive, rear right loudspeaker), in speaker wiring harness
V20	Connection (negative, rear right loudspeaker), in speaker wiring harness
*	Only models with four doors

ws	=	white
sw	=	black
ro	=	red
br	=	brown
gn	=	green
bl	=	blue
gr	=	grey
li	=	purple
ge	=	yellow
or	=	orange
rs	=	pink

satelettronica

Radio, CD changer

R	Radio
R41	CD changer*
T10y	10-pin connector, lilac
T12	12-pin connector
T20	20-pin connector, blue (LINE)
V14	Connection (screening), in CD changer wiring harness
*	For vehicles with CD changer only

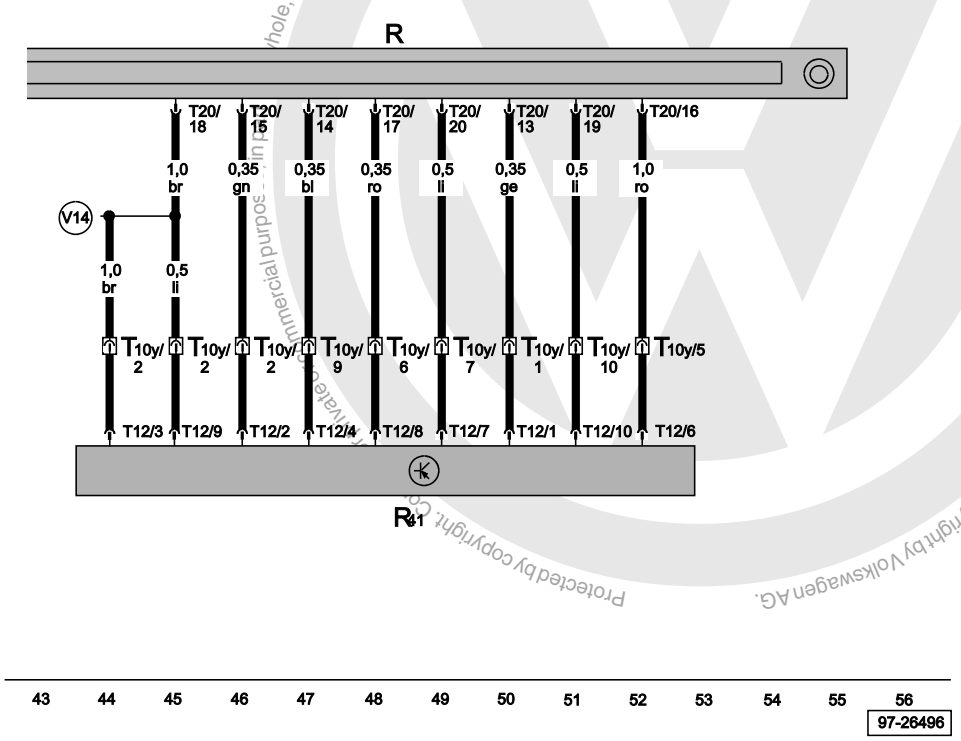

ws	=	white
sw	=	black
ro	=	red
br	=	brown
gn	=	green
bl	=	blue
gr	=	grey
li	=	purple
ge	=	yellow
or	=	orange
rs	=	pink

Protected by copyright. Copyright by Volkswagen AG. Volkswagen AG does not guarantee or accept any liability with respect to the correctness of information in this document. Copyright by Volkswagen AG. Reproduction, in whole, is not permitted unless authorised by Volkswagen AG. Volkswagen AG does not guarantee or accept any liability with respect to the correctness of information in this document. Copyright by Volkswagen AG. Reproduction, in whole, is not permitted unless authorised by Volkswagen AG. Volkswagen AG does not guarantee or accept any liability with respect to the correctness of information in this document. Copyright by Volkswagen AG.

satelettronica

Folding fabric sunroof

From October 1999

For alternatives to relay and fuse positions as well as multi-pin connector wiring - see "Fitting locations" section.

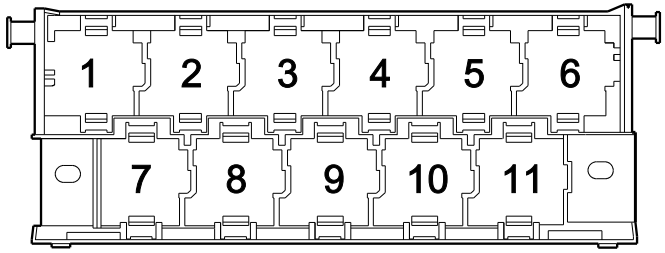

97-22850

Fuse colours

30 A - green
25 A - white
20 A - yellow
15 A - blue
10 A - red
7.5 A - brown
5 A - beige
3 A - purple

Protected by copyright. Copying for private or commercial purposes, in part or in whole, is not permitted unless authorised by Volkswagen AG. Volkswagen AG does not guarantee or accept any liability with respect to the correctness of information in this document. Copyright by Volkswagen AG.

satelettronica

Folding fabric sunroof motor, switch to open folding fabric sunroof, switch to close folding fabric sunroof

E20	Switches and instruments, lighting control
E268	Switch to open folding fabric sunroof
E269	Switch to close folding fabric sunroof
J59	X contact relief relay
L92	Folding fabric sunroof switch illumination
S64	Thermo-fuse, below relay carrier
T6	6-pin connector, brown
T6a	6-pin connector, grey
V86	Folding fabric sunroof motor
76	Earth point, near selector mechanism
278	Earth connection -4-, in interior wiring harness
A4	Positive (+) connection (58b), in dash panel wiring harness
A34	Connection (75x), in dash panel wiring harness
B102	Earth connection, in front left interior wiring harness
M31	Connection (75), in convertible top operation wiring harness

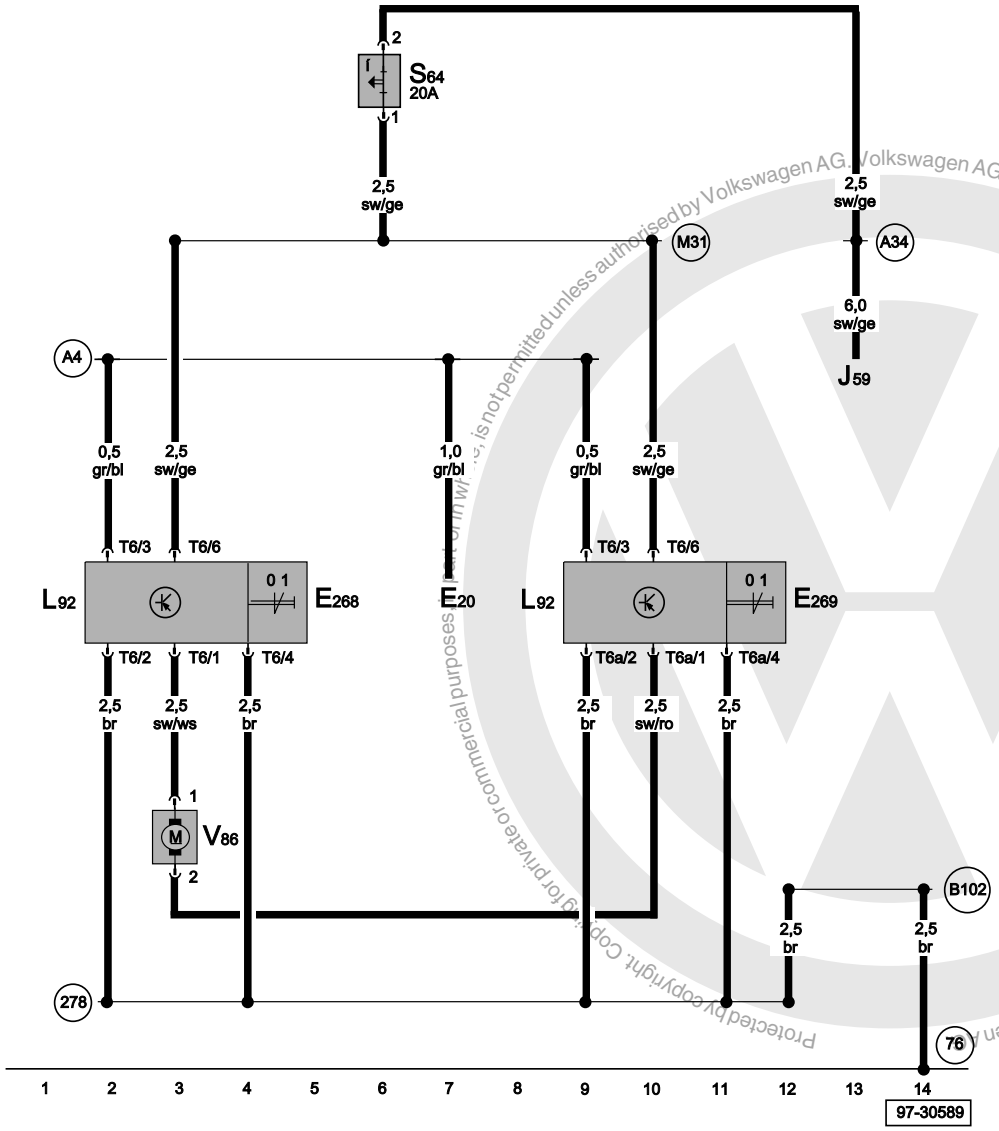

ws	=	white
sw	=	black
ro	=	red
br	=	brown
gn	=	green
bl	=	blue
gr	=	grey
li	=	purple
ge	=	yellow
or	=	orange
rs	=	pink

Protected by copyright. Copying for private or commercial purposes, in part or in whole, is not permitted unless authorised by Volkswagen AG. Volkswagen AG does not guarantee or accept any liability with respect to the correctness of information in this document. Copyright by Volkswagen AG.

satelettronica

Heated seats, driver's and front passenger's side

From October 1999

For alternatives to relay and fuse positions as well as multi-pin connector wiring - see "Fitting locations" section.

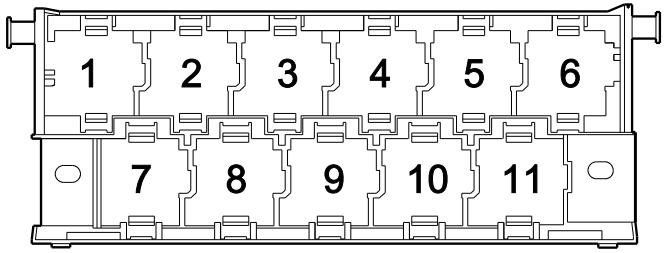

97-22850

Fuse colours

30 A - green
25 A - white
20 A - yellow
15 A - blue
10 A - red
7.5 A - brown
5 A - beige
3 A - lilac

Protected by copyright. Copying for private or commercial purposes, in part or in whole, is not permitted unless authorised by Volkswagen AG. Volkswagen AG does not guarantee or accept any liability with respect to the correctness of information in this document. Copyright by Volkswagen AG.

satelettronica

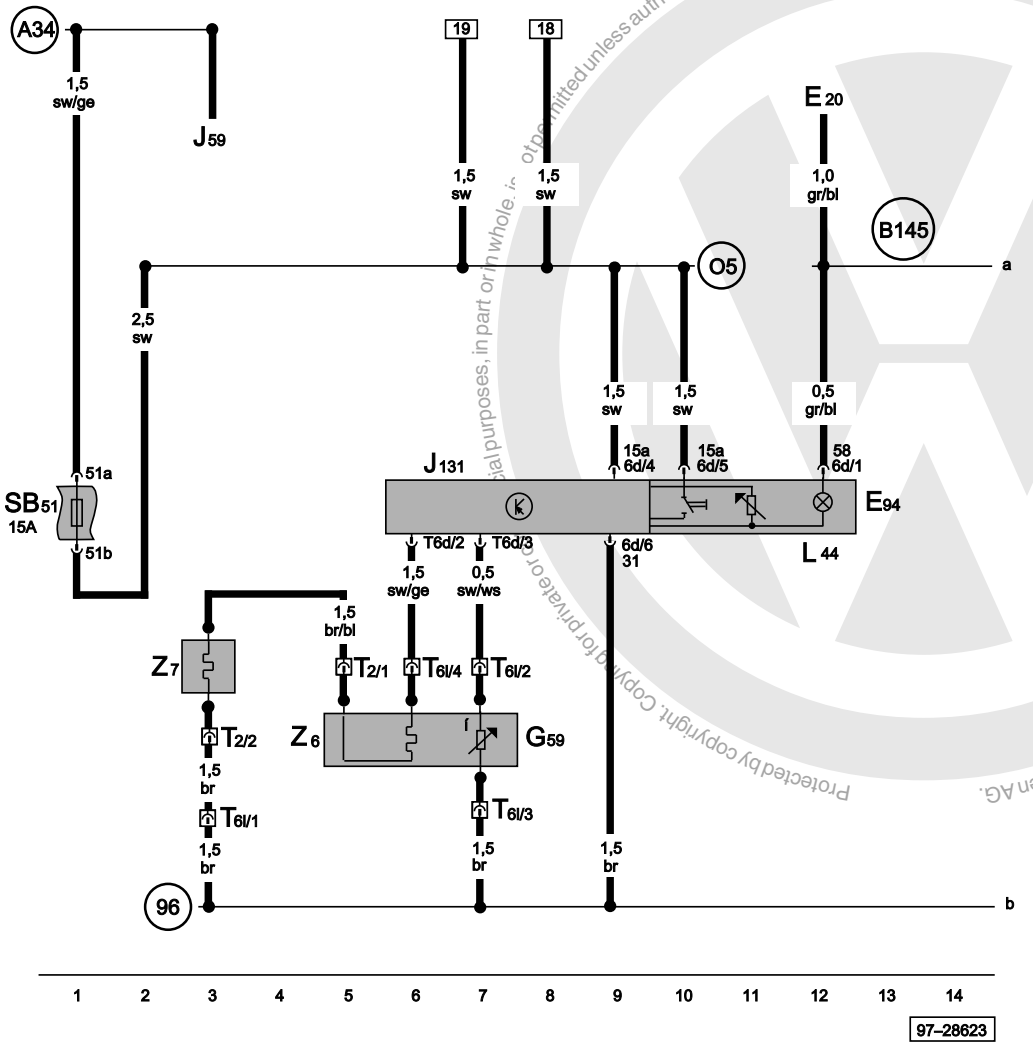

Heated driver's seat control unit, heated driver's seat adjuster, heated driver's seat, heated driver's seat backrest

E20	Switches and instruments, lighting control
E94	Heated driver's seat adjuster
G59	Driver's seat temperature sensor
J59	X contact relief relay
J131	Heated driver's seat control unit
L44	Seat heating switch light bulb
SB51	Fuse -51- in relay plate fuse box
T2	2-pin connector, under driver's seat
T6d	6-pin connector, black
T6l	6-pin connector, black, under driver's seat
Z6	Heated driver's seat
Z7	Heated driver's seat backrest
96	Earth connection -1-, in seat heating wiring harness
B145	Positive (+) connection (58b), in interior wiring harness
A34	Connection (75x), in dash panel wiring harness
O5	Positive (+) connection -1- (15a), in seat heating wiring harness

ws	=	white
sw	=	black
ro	=	red
br	=	brown
gn	=	green
bl	=	blue
gr	=	grey
li	=	purple
ge	=	yellow
or	=	orange
rs	=	pink

Protected by copyright. Copying for private or commercial purposes, in part or in whole, is not permitted unless authorised by Volkswagen AG. Volkswagen AG does not guarantee or accept any liability with respect to the correctness of information in this document. Copyright by Volkswagen AG.
satelettronica

Heated driver's seat control unit, heated front passenger's seat adjuster, heated front passenger's seat, heated front passenger's seat backrest

E95	Heated front passenger's seat adjuster
G60	Front passenger's seat temperature sensor
J132	Heated front passenger's seat control unit
L44	Seat heating switch light bulb
T2	2-pin connector, under front passenger's seat
T6e	6-pin connector, black
T6m	6-pin connector, black, under front passenger's seat
Z8	Heated front passenger's seat
Z9	Heated front passenger's seat backrest
57	Earth point, rear pillar, left
96	Earth connection -1-, in seat heating wiring harness
B109	Earth connection, in rear left interior wiring harness
B145	Positive (+) connection (58b), in dash panel wiring harness

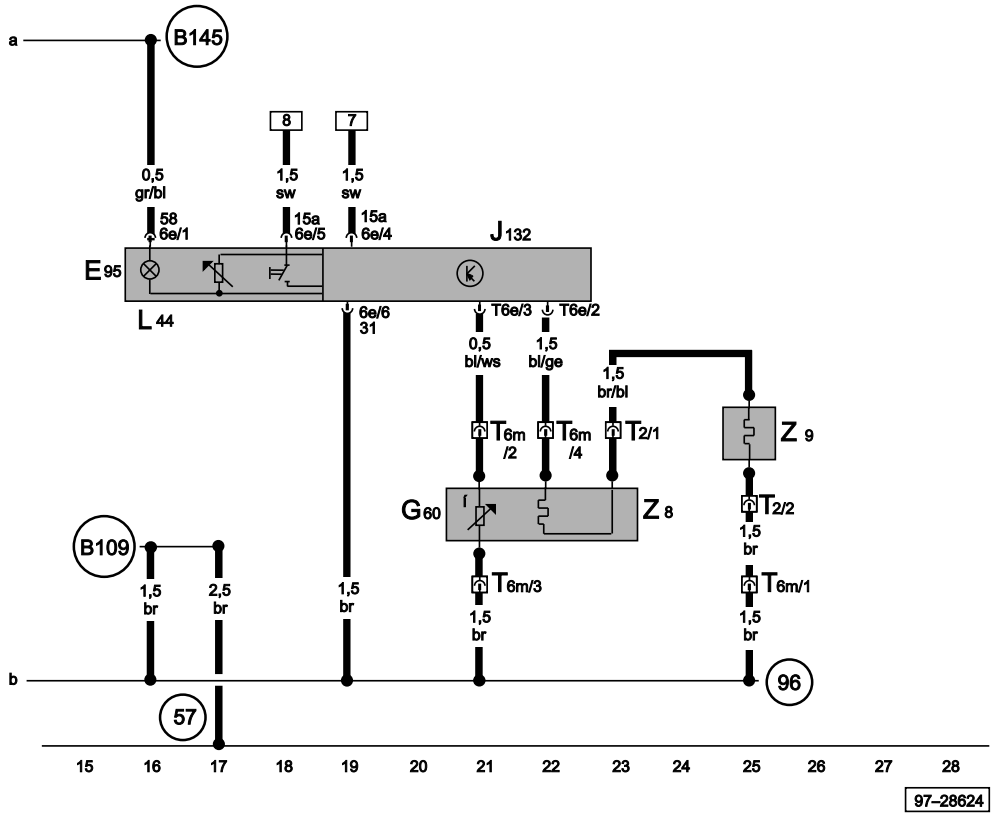

ws	=	white
sw	=	black
ro	=	red
br	=	brown
gn	=	green
bl	=	blue
gr	=	grey
li	=	purple
ge	=	yellow
or	=	orange
rs	=	pink

Protected by copyright. Copying for private or commercial purposes, in part or in whole, is not permitted unless authorised by Volkswagen AG. Volkswagen AG does not guarantee or accept any liability with respect to the correctness of information in this document. Copyright by Volkswagen AG.
satelettronica

⇒ Exterior mirror, heated and adjustable
⇒ Sliding/tilting sunroof
⇒ Electric windows
From October 1999

For alternatives to relay and fuse positions as well as multi-pin connector wiring - see "Fitting locations" section.

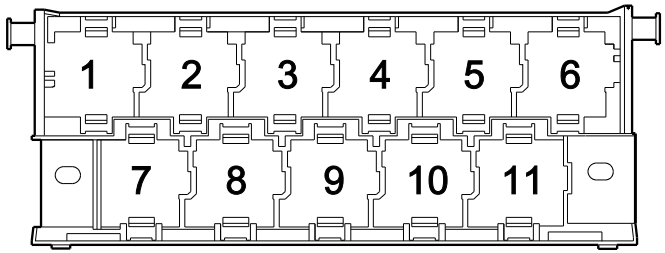

97-22850

Fuse colours

30 A - green
25 A - white
20 A - yellow
15 A - blue
10 A - red
7.5 A - brown
5 A - beige
3 A - lilac

Protected by copyright. Copying for private or commercial purposes, in part or in whole, is not permitted unless authorised by Volkswagen AG. Volkswagen AG does not guarantee or accept any liability with respect to the correctness of information in this document. Copyright by Volkswagen AG.
satelettronica

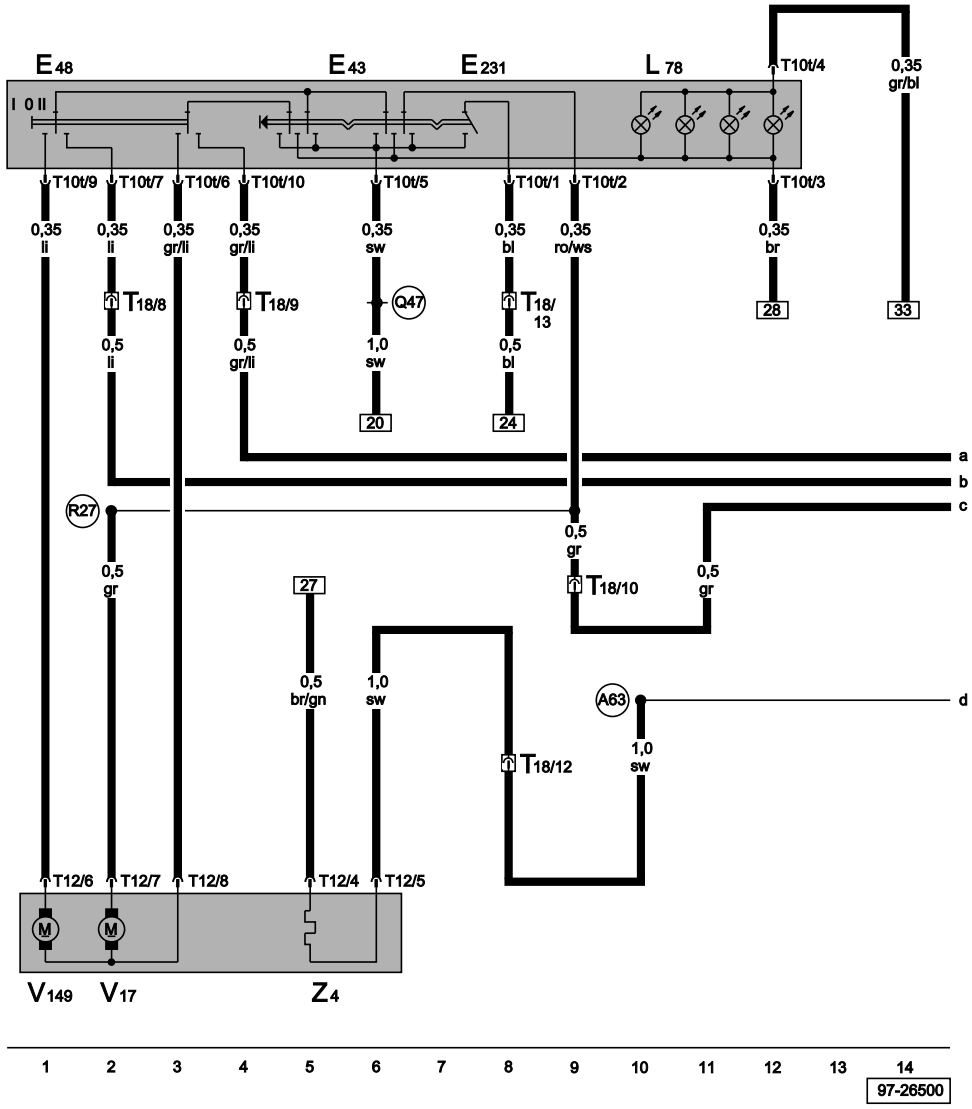

Mirror adjustment switch, driver's door electrically adjustable exterior mirror

E43	Mirror adjustment switch
E48	Mirror adjustment change-over switch
E231	Exterior mirror heating button
L78	Mirror adjustment switch illumination
T10t	10-pin connector
T12	12-pin connector, in driver's door
T18	18-pin connector, in driver's door
V17	Mirror adjustment motor, driver's side
V149	Mirror adjustment motor, driver's side
Z4	Heated exterior mirror, driver's side
A63	Connection (mirror adjustment/heating), in dash panel wiring harness
Q47	Positive connection (15a), en electric windows/ central locking and convertible top wiring harness
R27	Connection (mirror adjustment), in driver's side door wiring harness

ws	=	white
sw	=	black
ro	=	red
br	=	brown
gn	=	green
bl	=	blue
gr	=	grey
li	=	purple
ge	=	yellow
or	=	orange
rs	=	pink

Protected by copyright. Copying for private or commercial purposes, in part or in whole, is not permitted unless authorised by Volkswagen AG. Volkswagen AG does not guarantee or accept any liability with respect to the correctness of information in this document. Copyright by Volkswagen AG.
satelettronica

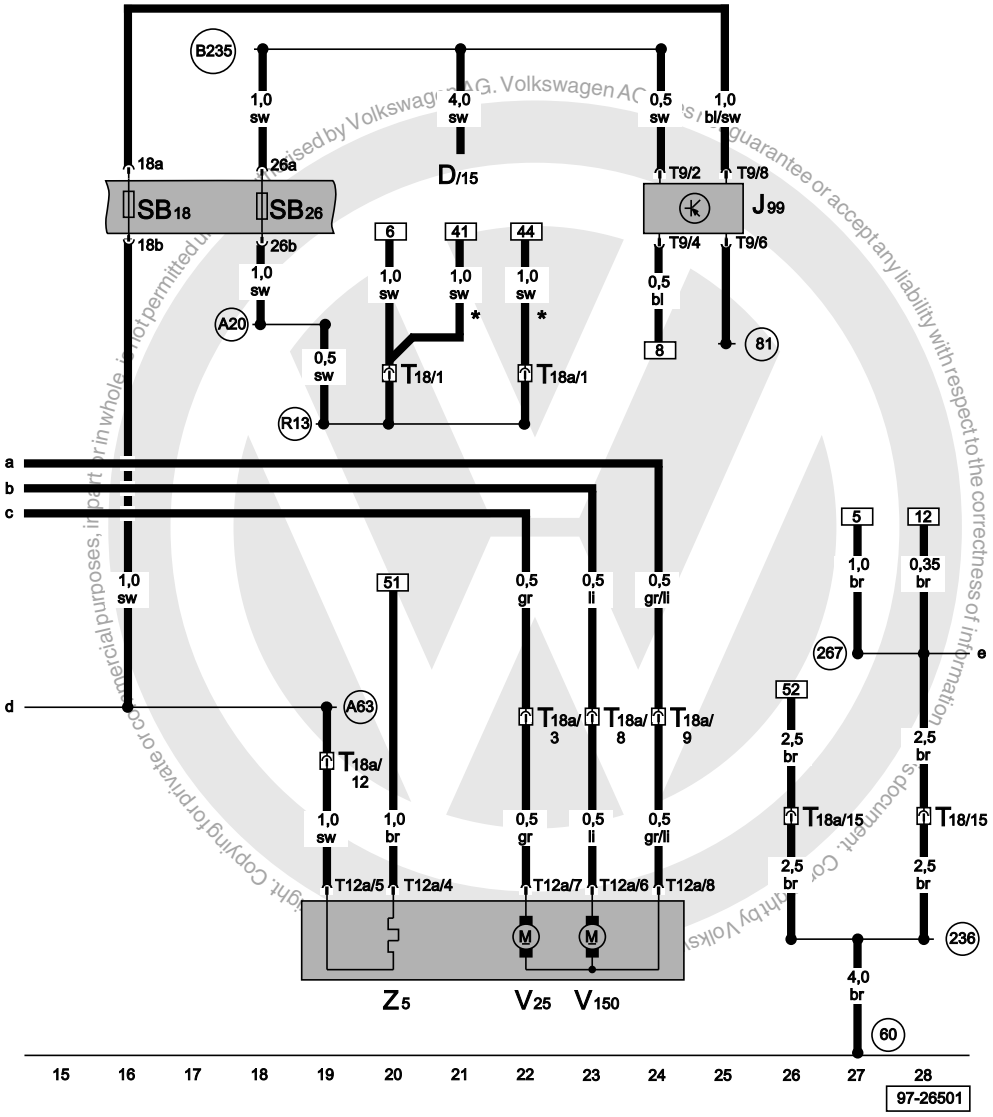

Electrically adjustable exterior mirror for front passenger's door, exterior mirror heater relay

D	Ignition/starter switch
J99	Heated exterior mirror relay
T12a	12-pin connector, in front passenger's door
T18	18-pin connector, in driver's door
T18a	18-pin connector, in front passenger's door
V25	Mirror adjustment motor, front passenger side
V150	Mirror adjustment motor, front passenger's side
Z5	Heated exterior mirror, front passenger's side
60	Earth point -2-, near right tail light
81	Earth connection -1-, in dash panel wiring harness
236	Earth connection -2-, in electric windows/central locking and convertible top wiring harrness
267	Earth connection -2-, in driver's door wiring harness
A20	Connection (15a), in dash panel wiring harness
A63	Connection (mirror adjustment/heating), in dash panel wiring harness
B235	Connection -4- (15a), in interior wiring harness
R13	Positive connection -4- (15), in driver's door wiring harness
*	For vehicles with electric windows only

ws	=	white
sw	=	black
ro	=	red
br	=	brown
gn	=	green
bl	=	blue
gr	=	grey
li	=	purple
ge	=	yellow
or	=	orange
rs	=	pink

satelettronica

Front left electric window control unit, front left electric window motor, electric window switch on driver's side

E20	Switches and instruments - lighting control
E40	Front left electric window switch
E81	Front right electric window switch, driver
J295	Electric window control unit, FL
L53	Electric window switch light bulb
SB38	Fuse -38 - in relay plate fuse holder
T6c	6-pin connector
T10n	8-pin connector, black, in driver's door
T10p	8-pin connector, black, in driver's door
T18	18-pin connector, in driver's door
V14	Electric window motor, left
267	Earth connection -2-, in driver's door wiring harness
A4	Positive (+) connection (58b), in dash panel wiring harness
B133	Connection (central locking open), in interior wiring harness
B134	Connection (central locking closed), in interior wiring harness
B154	Connection -1- (DC), in interior wiring harness
R10	Positive connection -1- (30), in driver's door wiring harness
R51	Connection (58b), in driver's side door wiring harness

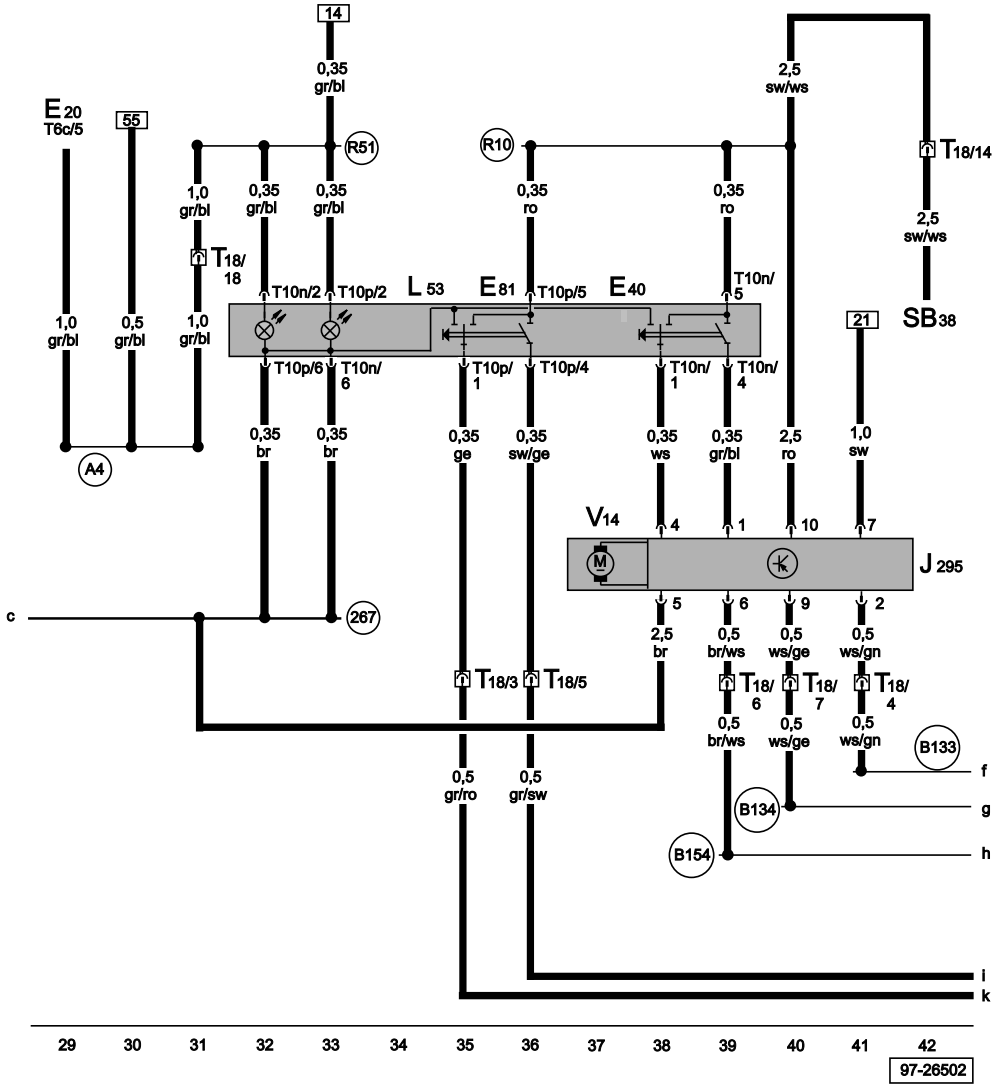

ws	=	white
sw	=	black
ro	=	red
br	=	brown
gn	=	green
bl	=	blue
gr	=	grey
li	=	purple
ge	=	yellow
or	=	orange
rs	=	pink

satelettronica

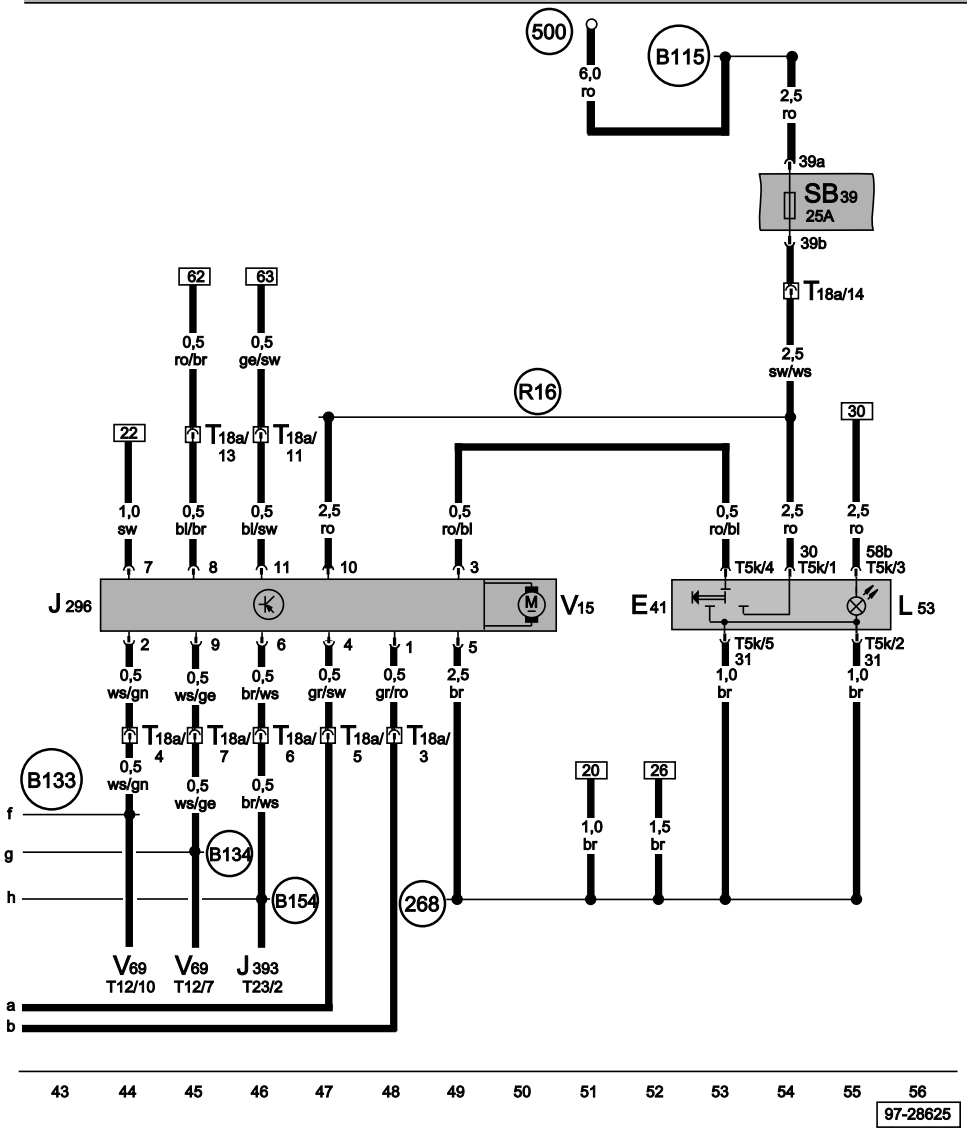

Electric window control unit front right, electric window motor right, window lifter switch right

E41	Window lifter switch, front right
J296	Electric window control unit, FR, in front passenger's door
J393	Convenience system control unit
L53	Window switch light bulb
SB39	Fuse -39- in relay plate fuse box
T5k	5-pin connector, on electric window switch
T12	12-pin connector
T18a	18-pin connector, in front passenger's door
T23	23-pin connector
V15	Electric window motor, right
268	Earth connection -2-, in door wiring harness - front passenger's side
500	Screw connection -1- (30), on relay plate
B115	Positive (+) connection (30, central electrics), in interior wiring harness
B133	Connection (central locking open), in interior wiring harness
B134	Connection (central locking closed), in interior wiring harness
B154	Connection -1- (DC), in interior wiring harness
R16	Positive (+) connection -1- (30), in door wiring harness - front passenger's side

ws	=	white
sw	=	black
ro	=	red
br	=	brown
gn	=	green
bl	=	blue
gr	=	grey
li	=	purple
ge	=	yellow
or	=	orange
rs	=	pink

Protected by copyright. Copying for private or commercial purposes, in part or in whole, is not permitted unless authorised by Volkswagen AG. Volkswagen AG does not guarantee or accept any liability with respect to the correctness of information in this document. Copyright by Volkswagen AG.
satelettronica

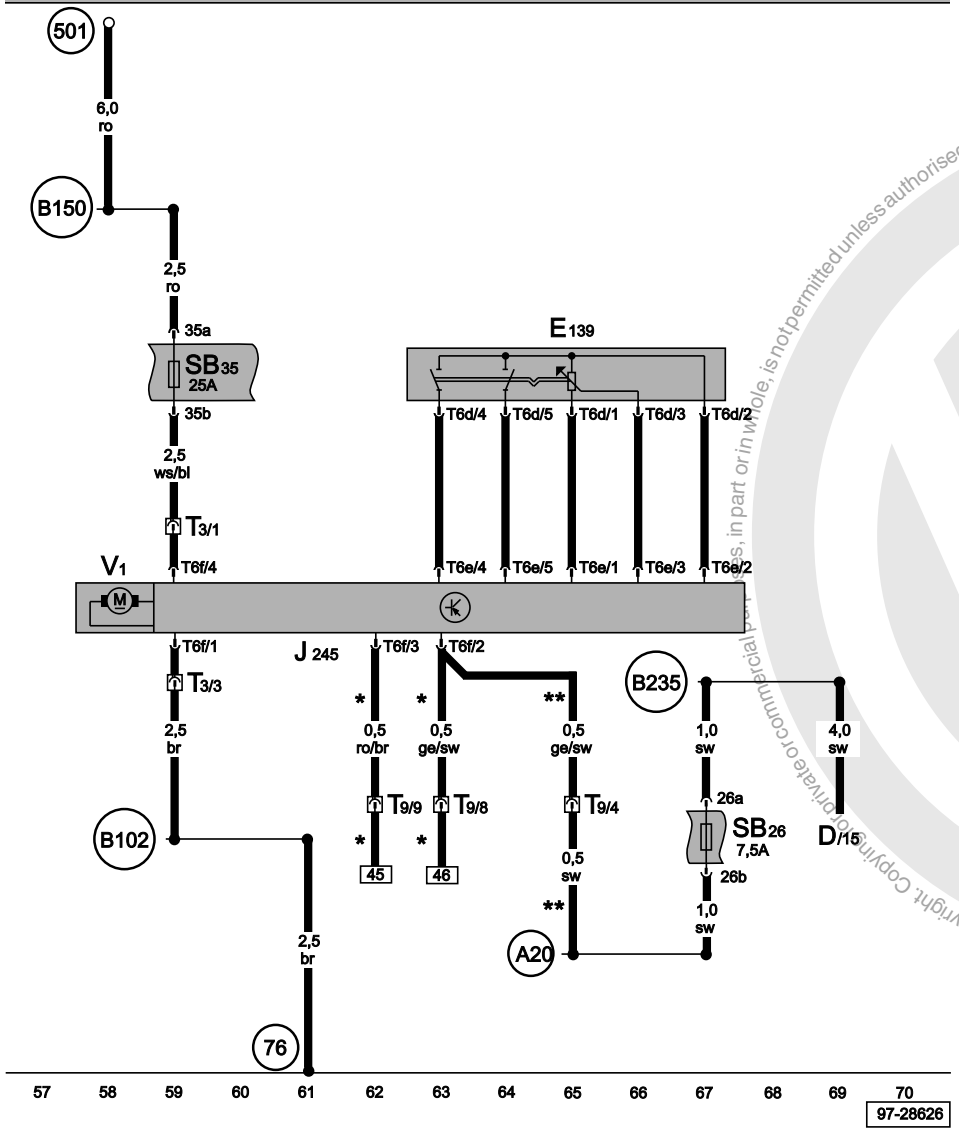

Sliding sunroof adjustment control unit, sliding sunroof adjustment regulator

D	Ignition/starter switch
E139	Sliding sunroof adjustment regulator
J245	Sliding sunroof adjustment control unit
SB26	Fuse -26- in relay plate fuse box
SB35	Fuse -35- in relay plate fuse box
T3	3-pin connector, near interior light
T6d	6-pin connector, on sliding sunroof adjustment regulator
T6e	6-pin connector, on sliding sunroof adjustment control unit
T6f	6-pin connector, on sliding sunroof adjustment control unit
V1	Sliding sunroof motor
T9	9-pin connector, near interior light, front
76	Earth connection, near selector mechanism
501	Screw connection -2- (30), on relay plate
A20	Connection (15a), in dash panel wiring harness
B102	Earth connection, in front left interior wiring harness
B150	Positive (+) connection -2- (30a), in interior wiring harness
B235	Positive (+) connection -4- (15a), in interior wiring harness
*	Only models with central locking
**	Only models without central locking

ws	=	white
sw	=	black
ro	=	red
br	=	brown
gn	=	green
bl	=	blue
gr	=	grey
li	=	purple
ge	=	yellow
or	=	orange
rs	=	pink

Protected by copyright. Copyright by Volkswagen AG. Volkswagen AG does not guarantee or accept any liability with respect to the correctness of information in this document. Copyright by Volkswagen AG. Reproduction, in part or in whole, is not permitted unless authorised by Volkswagen AG. Volkswagen AG does not guarantee or accept any liability with respect to the correctness of information in this document. Copyright by Volkswagen AG.

satelettronica

Headlight washer system

From October 1999

For alternatives to relay and fuse positions as well as multi-pin connector wiring - see "Fitting locations" section.

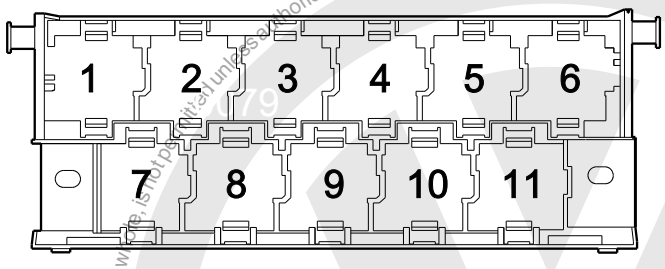

97-22850

Fuse colours

30 A - green
25 A - white
20 A - yellow
15 A - blue
10 A - red
7.5 A - brown
5 A - beige
3 A - lilac

Protected by copyright. Copying for private or commercial purposes, in part or in whole, is not permitted unless authorised by Volkswagen AG. Volkswagen AG does not guarantee or accept any liability with respect to the correctness of information in this document. Copyright by Volkswagen AG.

satelettronica

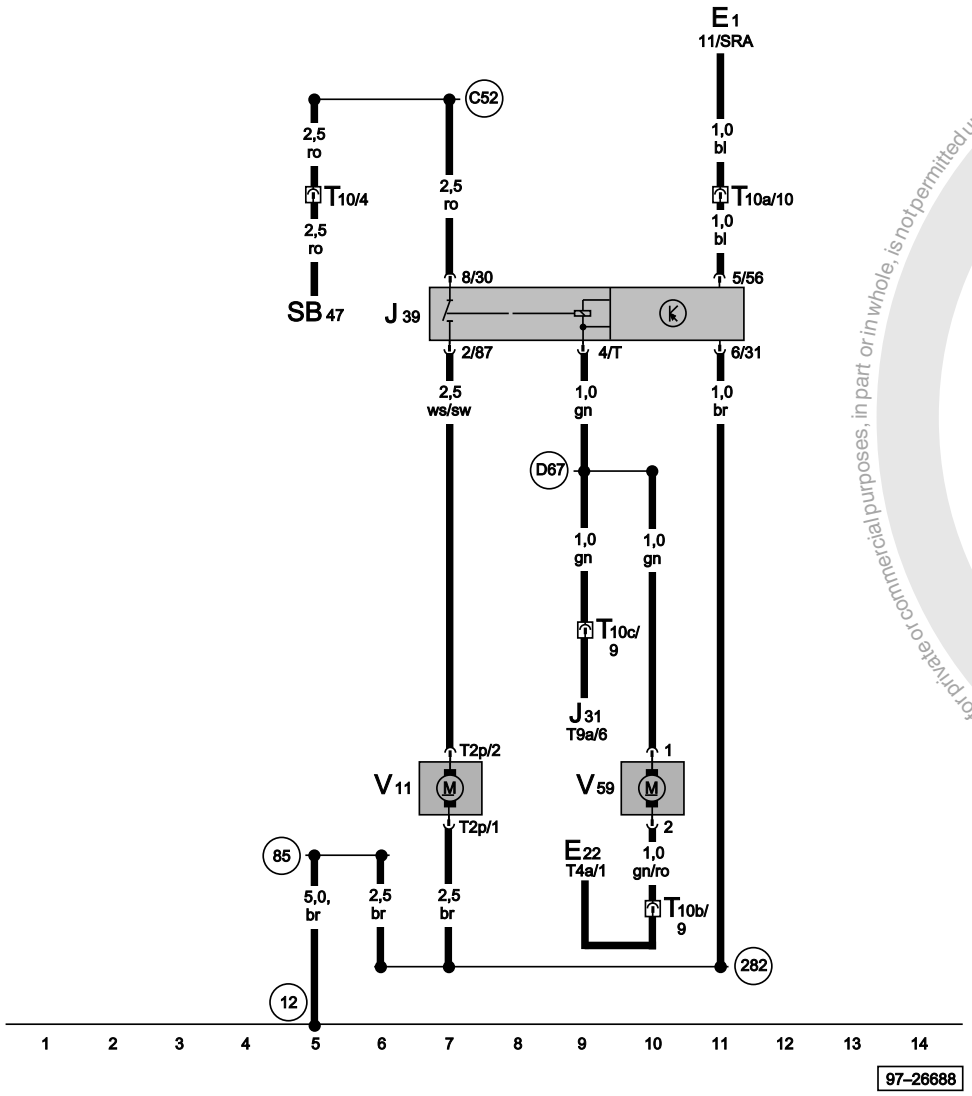

Headlight washer system

E1	Lighting switch
E22	Intermittent wiper switch
J31	Automatic intermittent wash/wipe relay, relay station
J39	Headlight washer system relay, in engine compartment, front
SB47	Fuse -47- in relay plate fuse box
T2p	2-pin connector, black, near headlight washer system pump
T4a	4-pin connector
T9a	9-pin connector
T10	10-pin connector, white, near relay station
T10a	10-pin connector, green, near relay station
T10b	10-pin connector, black, near relay station
T10c	10-pin connector, blue, near relay station
V11	Headlight washer system pump
V59	Windscreen and rear window washer pump
12	Earth point, in engine compartment, left
85	Earth connection -1-, in engine compartment wiring harness
282	Earth connection, in headlight washer system wiring harness
C52	Positive (+) connection (30), in headlight washer system wiring harness
D67	Connection (headlight washer system), in engine compartment wiring harness

ws	=	white
sw	=	black
ro	=	red
br	=	brown
gn	=	green
bl	=	blue
gr	=	grey
li = purple
ge	=	yellow
or	=	orange
rs	=	pink

Protected by copyright. Copying for private or commercial purposes, in part or in whole, is not permitted unless authorised by Volkswagen AG. Copyright by Volkswagen AG. We do not accept any liability with respect to the correctness of information in this document.
satelettronica

Protected by copyright. Copying for private or commercial purposes, in part or in whole, is not permitted unless authorised by Volkswagen AG. Volkswagen AG does not guarantee or accept any liability with respect to the correctness of information in this document. Copyright by Volkswagen AG.

CAN-bus network

From October 1999

For alternatives to relay and fuse positions as well as multi-pin connector wiring - see "Fitting locations" section.

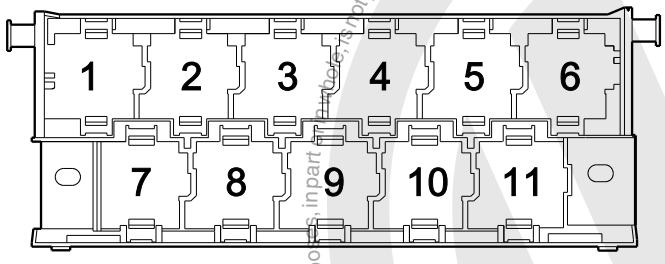

97-22850

Fuse colours

30 A - green
25 A - white
20 A - yellow
15 A - blue
10 A - red
7.5 A - brown
5 A - beige
3 A - purple

satelettronica

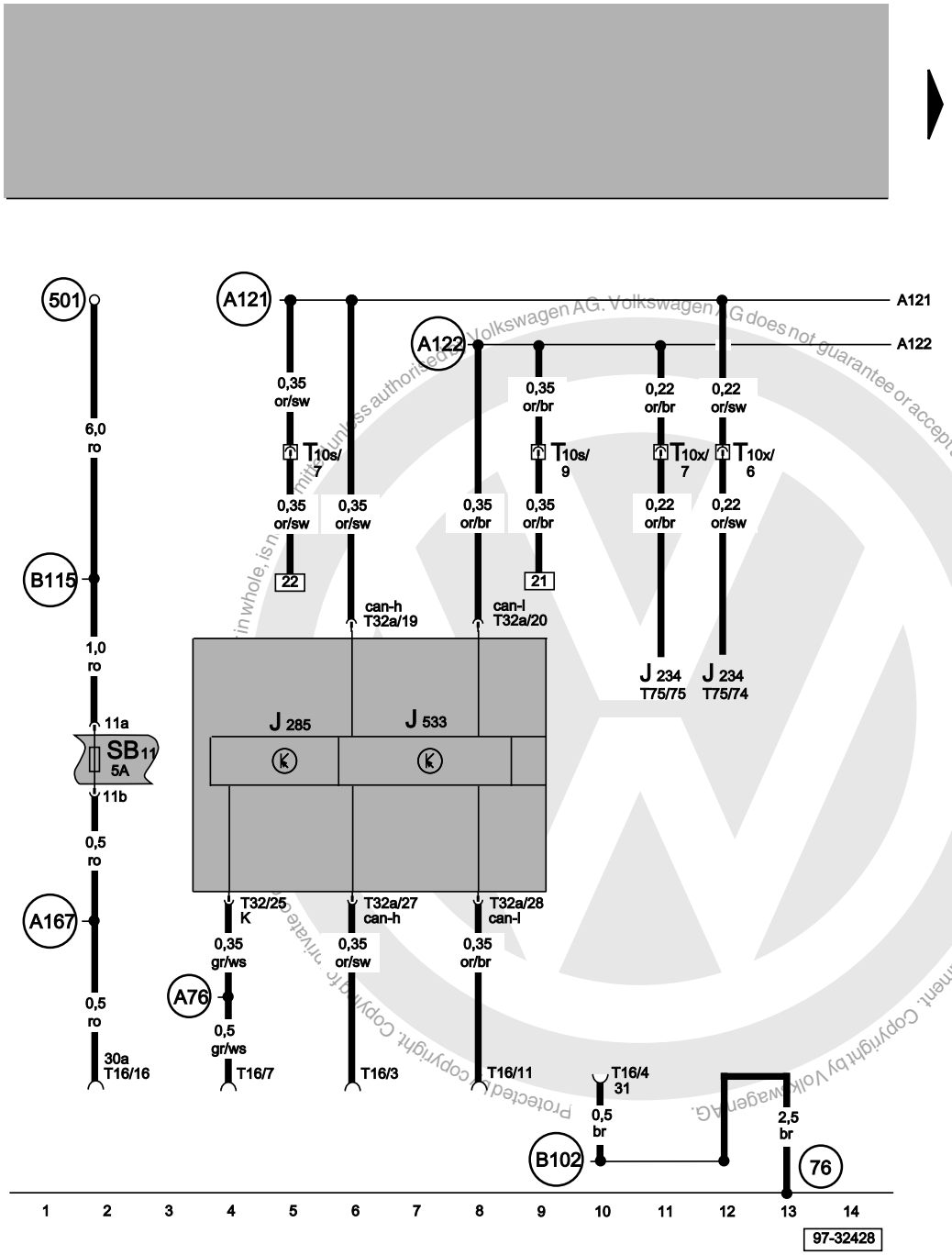

Dash panel insert, data bus diagnostic interface, self-diagnosis connection, airbag control unit connection, fuses

J234	Airbag control unit
J285	Control unit with display in dash panel insert
J533	Data bus diagnostic interface control unit
SB11	Fuse -11- in fuse box/relay plate
T10s	10-pin connector, grey, connector point under relay carrier
T10x	10-pin connector, yellow, connector point under relay carrier
T16	16-pin connector, self-diagnosis connection
T32	32-pin connector, blue
T32a	32-pin connector, green
T75	75-pin connector
76	Earth point, near selector mechanism
501	Screw connection -2- (30), on relay plate
A76	Connection (diagnosis wire K), in dash panel wiring harness
A121	Connection (high bus), in dash panel wiring harness
A122	Connection (low bus), in dash panel wiring harness
A167	Positive (+) connection -3- (30a), in dash panel wiring harness
B102	Earth connection, in interior wiring harness, front left
B115	Positive (+) connection (30, central electrics), in interior wiring harness

ws	=	white
sw	=	black
ro	=	red
br	=	brown
gn	=	green
bl	=	blue
gr	=	grey
li	=	purple
ge	=	yellow
or	=	orange
rs	=	pink

satelettronica

Protected by copyright. Copyright by Volkswagen AG. Volkswagen AG does not guarantee or accept any liability with respect to the correctness of information in this document. Copyright by Volkswagen AG. Volkswagen AG, in whole, is not authorised to transmit, unless authorised by Volkswagen AG.

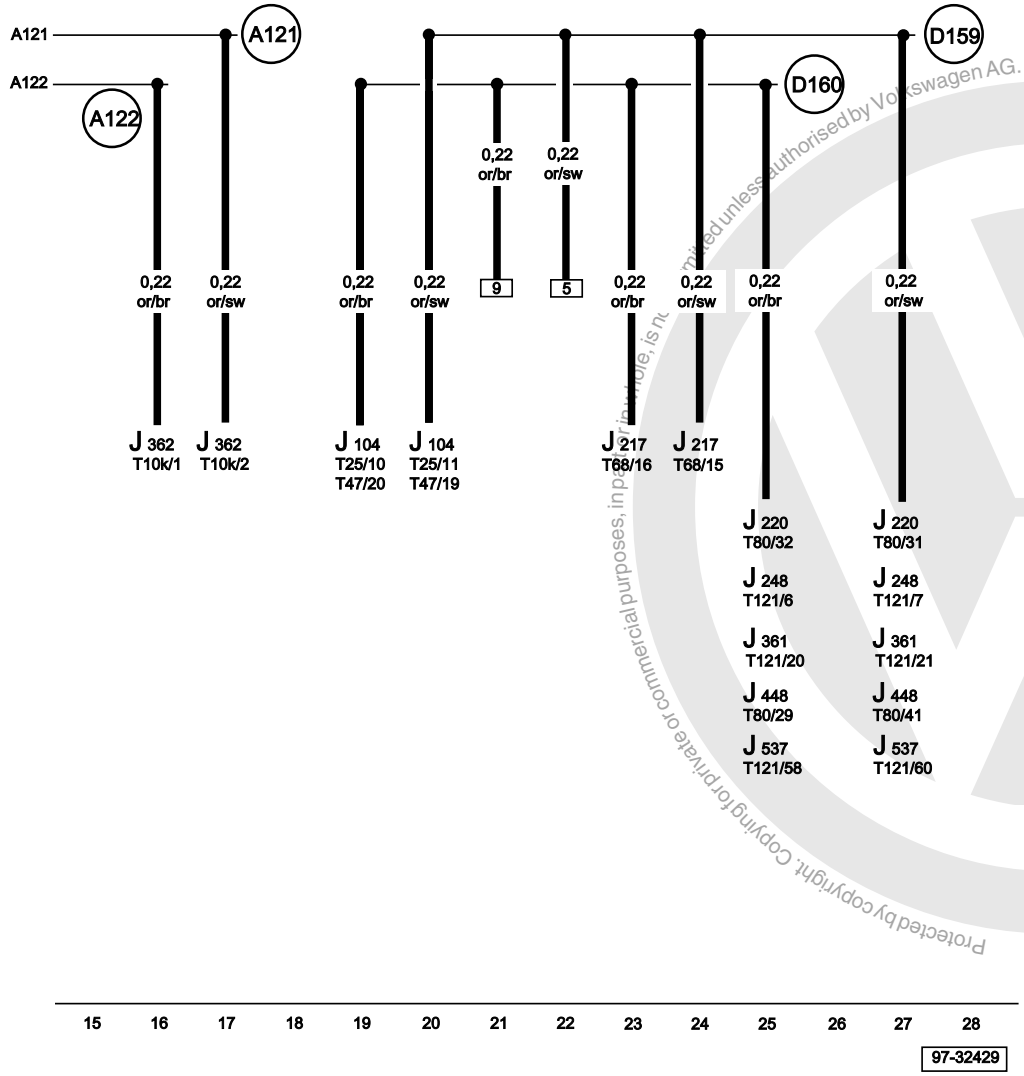

ABS/ABS with EDL control unit, steering angle sender, automatic gearbox control unit, electronic manual gearbox control unit, engine control unit

J104	ABS with EDL control unit
J217	Automatic gearbox control unit
J220	Motronic control unit
J248	Diesel direct injection system control unit
J361	Simos control unit
J362	Immobilizer control unit
J448	4AV/4CV (injection system) control unit
J537	4LV control unit (injection system)
T25	25-pin connector, on ABS with EDL control unit
T10k	10-pin connector, on immobilizer control unit
T47	47-pin connector, on ABS with EDL control unit
T68	68-pin connector, on electronic manual gearbox control unit
T80	80-pin connector
T121	68-pin connector
A121	Connection (high bus), in dash panel wiring harness
A122	Connection (low bus), in dash panel wiring harness
D159	Connection (high bus), in engine compartment wiring harness
D160	Connection (low bus), in engine compartment wiring harness

ws	=	white
sw	=	black
ro	=	red
br	=	brown
gn	=	green
bl	=	blue
gr	=	grey
li	=	purple
ge	=	yellow
or	=	orange
rs	=	pink

Protected by copyright. Copying for private or commercial purposes, in part or in whole, is not permitted unless authorised by Volkswagen AG. Volkswagen AG does not guarantee or assume any liability with respect to the correctness of information in this document. Copyright by Volkswagen AG.

satelettronica

Climatronic

⇒ **1.4 ltr./55 kW - Turbo diesel engine with unit injectors, engine codes AMF**

From May 2000

For alternatives to relay and fuse positions as well as multi-pin connector wiring - see "Fitting locations" section.

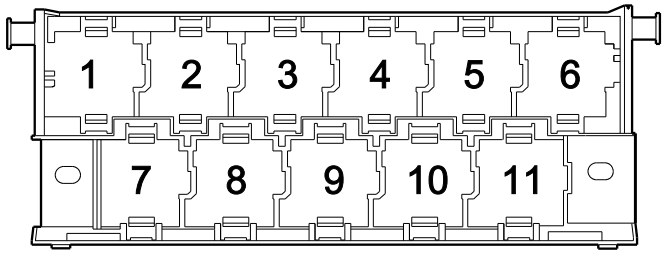

97-22850

Fuse colours

30 A - green
25 A - white
20 A - yellow
15 A - blue
10 A - red
7.5 A - brown
5 A - beige
3 A - lilac

Protected by copyright. Copying for private or commercial purposes, in part or in whole, is not permitted unless authorised by Volkswagen AG. Volkswagen AG does not guarantee or accept any liability with respect to the correctness of information in this document. Copyright by Volkswagen AG.

satelettronica

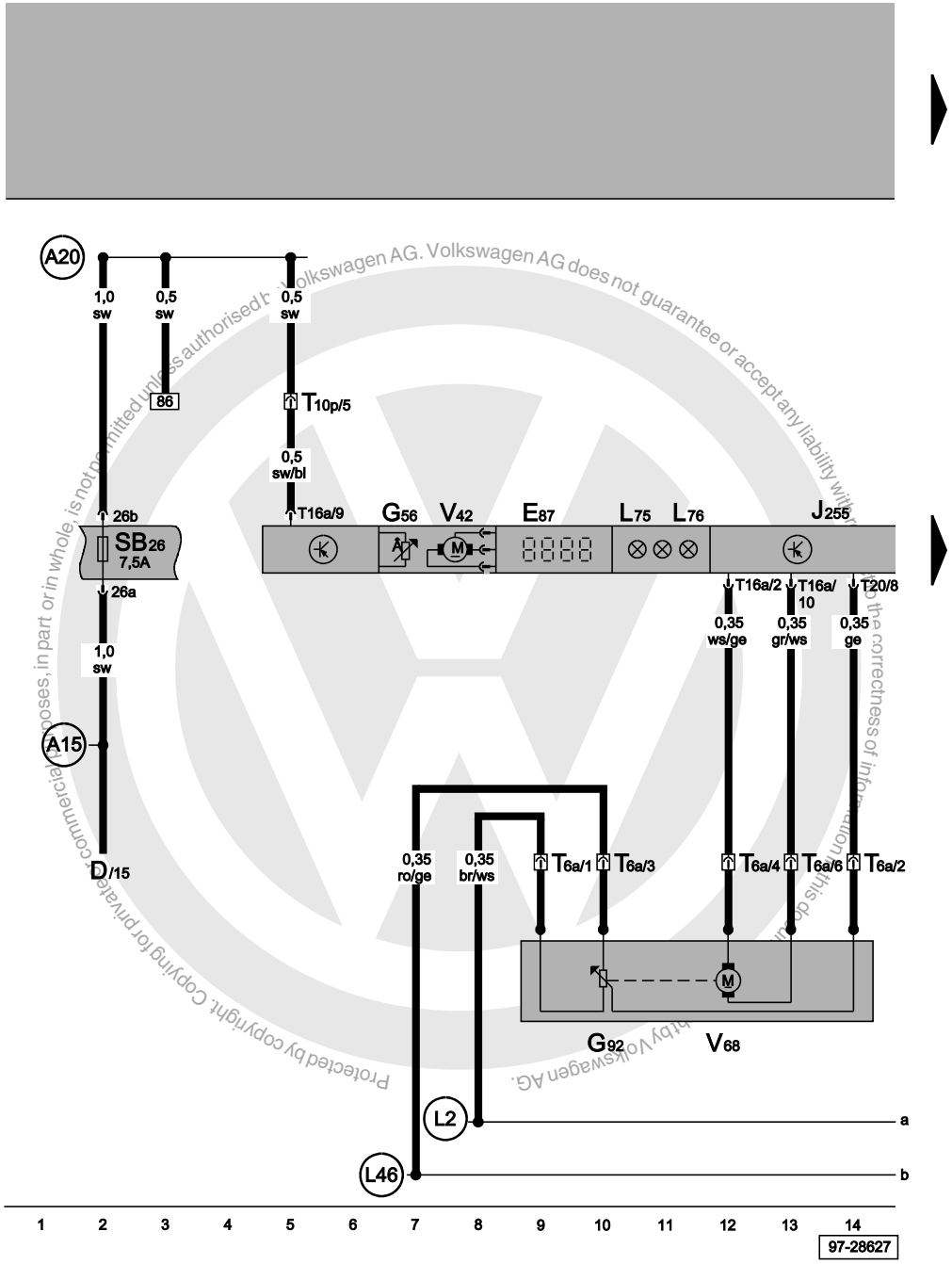

Climatronic control unit, temperature flap control motor

D	Ignition/starter switch
E87	Control and display unit for Climatronic
G56	Dash panel temperature sensor
G92	Control motor potentiometer for temperature flap
J255	Climatronic control unit
L75	Digital display illumination
L76	Button illumination
SB26	Fuse -26- in fuse box
T6a	6-pin connector, behind dash panel, centre
T10p	10-pin connector, behind dash panel, centre
T16a	16-pin connector
T20	20-pin connector
V42	Temperature sensor blower
V68	Temperature flap control motor
A15	Positive (+) connection (15), in instruments wiring harness
A20	Connection (15a), in dash panel wiring harness
L2	Connection, in air conditioner wiring harness
L46	Connection (5V), in Climatronic controls wiring harness

ws	=	white
sw	=	black
ro	=	red
br	=	brown
gn	=	green
bl	=	blue
gr	=	grey
li	=	purple
ge	=	yellow
or	=	orange
rs	=	pink

Protected by copyright. Copying for private, commercial purposes, in part or in whole, is not permitted unless authorised by Volkswagen AG. Volkswagen AG does not guarantee or accept any liability with respect to the correctness of information in this document. Copyright by Volkswagen AG.

satelettronica

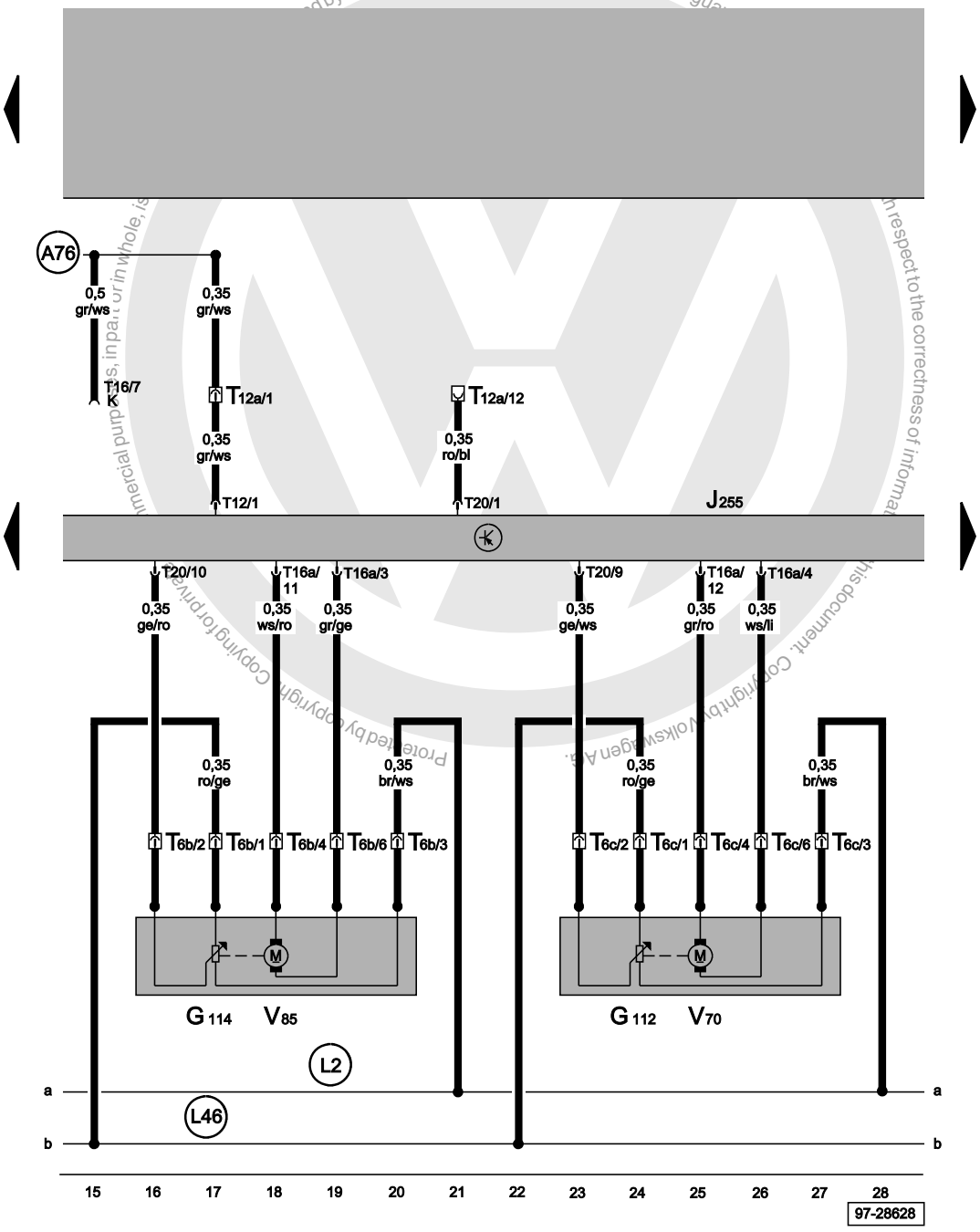

Climatronic control unit, central flap control motor, footwell/ defroster flap control motor

G112	Control motor potentiometer, central flap
G114	Control motor potentiometer, footwell/defroster flap
J255	Climatronic control unit
T6b	6-pin connector, behind dash panel, centre
T6c	6-pin connector, behind dash panel, centre
T12	12-pin connector
T12a	12-pin connector, behind dash panel, centre
T16	16-pin connector, self-diagnosis connection
T16a	16-pin connector
T20	20-pin connector
V70	Central flap control motor
V85	Footwell/defroster flap control motor
A76	Connection (diagnosis wire K), in dash panel wiring harness
L2	Connection, in air conditioner wiring harness
L46	Connection (5V), in Climatronic controls wiring harness

ws	=	white
sw	=	black
ro	=	red
br	=	brown
gn	=	green
bl	=	blue
gr	=	grey
li	=	purple
ge	=	yellow
or	=	orange
rs	=	pink

satelettronica

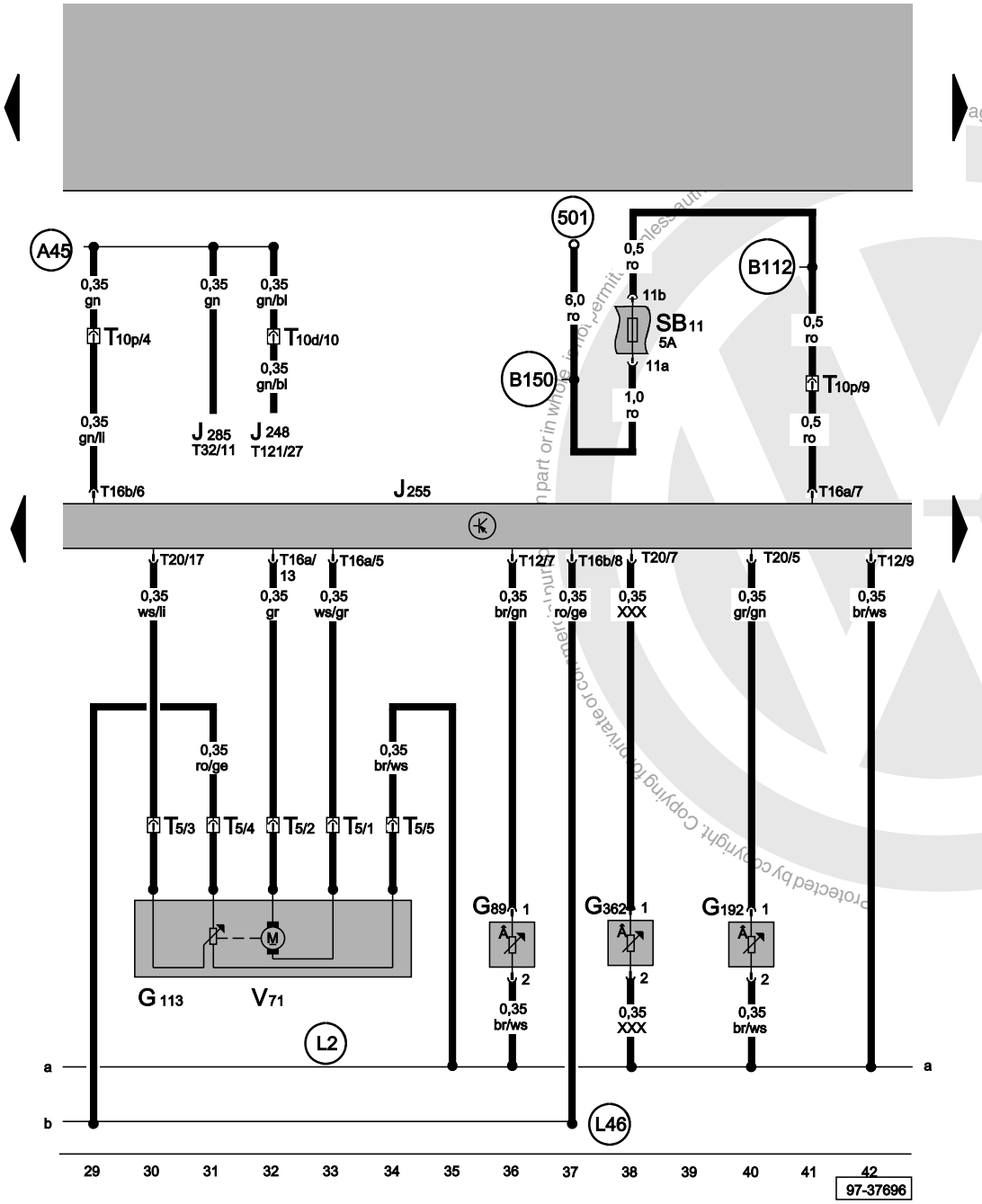

Climatronic control unit, air flow flap control motor, vent temperature sender, fresh air intake duct temperature sensor

G89	Fresh air intake duct temperature sensor, on right below dash panel
G113	Air flow flap control motor potentiometer
G192	Vent temperature sender, footwell
G362	Evaporator out-flow temperature sender
J248	Diesel direct injection system control unit
J255	Climatronic control unit
J285	Control unit with display in dash panel insert
SB11	Fuse -11- in relay plate fuse holder
T5	5-pin connector
T10d	10-pin connector, red, coupling station below relay carrier
T10p	10-pin connector, behind dash panel
T12	12-pin connector
T16a	16-pin connector
T16b	16-pin connector
T20	20-pin connector
T32	32-pin connector, blue
T121	121-pin connector
V71	Air flow flap control motor
501	Screw connection -2- (30), on relay plate
A45	Connection (engine speed signal), in dash panel wiring harness
B112	Positive connection (30a), in right interior wiring harness
B150	Positive connection -2- (30a), in interior wiring harness
L2	Connection, in air conditioner wiring harness
L46	Connection (5V), in air conditioner wiring harness

ws	=	white
sw	=	black
ro	=	red
br	=	brown
gn	=	green
bl	=	blue
gr	=	grey
li	=	purple
ge	=	yellow
or	=	orange
rs	=	pink

Protected by copyright. Copying for private or commercial purposes, in part or in whole, is not permitted unless authorised. Volkswagen AG does not guarantee or assume any liability with respect to the correctness of information in this document. Copyright by Volkswagen AG.

satelettronica

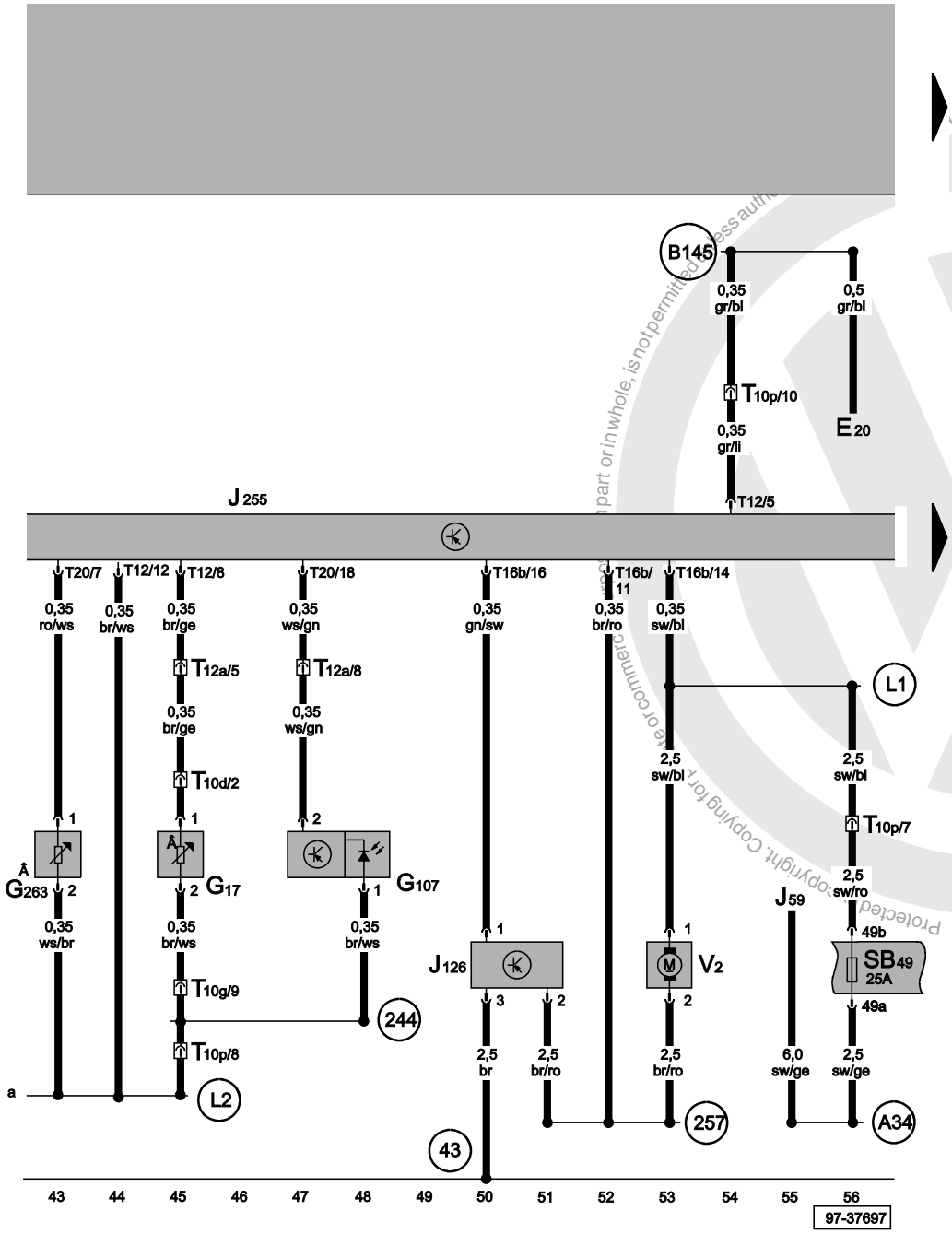

Climatronic control unit, temperature sensor, fresh air blower, fresh air blower control unit, sunlight penetration photosensor

E20	Switches and instruments illumination regulator
G17	Ambient temperature sensor, on left in front bumper
G107	Sunlight penetration photosensor
G263	Evaporator out-flow temperature sender
J59	X contact relief relay
J126	Fresh air blower control unit, on right below dash panel
J255	Climatronic control unit
SB49	Fuse -49- in fuse holder
T10d	10-pin connector, red
T10g	10-pin connector, brown
T10p	10-pin connector, in centre behind dash panel
T12	12-pin connector
T12a	12-pin connector
T16b	16-pin connector
T20	20-pin connector
V2	Fresh air blower
43	Earth point, lower right A-pillar
244	Earth connection (sender earth), in Climatronic wiring harness
257	Earth connection -2-, in Climatronic wiring harness
A34	Connection (75x), in dash panel wiring harness
B145	Positive connection (58b), in interior wiring harness
L1	Positive connection (75), in air conditioner wiring harness
L2	Connection, in air conditioner wiring harness

ws	=	white
sw	=	black
ro	=	red
br	=	brown
gn	=	green
bl	=	blue
gr	=	grey
li	=	purple
ge	=	yellow
or	=	orange
rs	=	pink

satelettronica

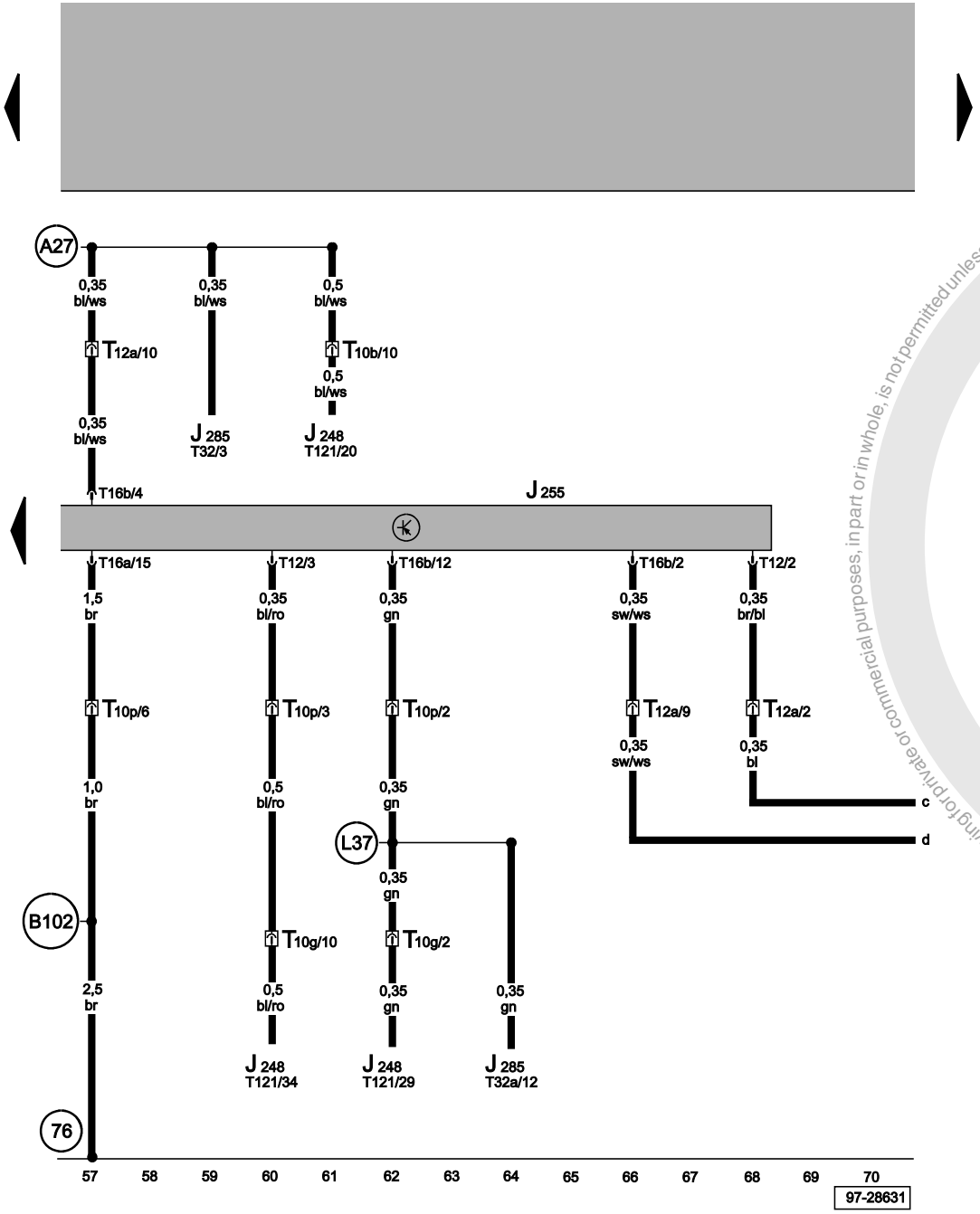

Climatronic control unit

J248	Diesel direct injection system control unit
J255	Climatronic control unit
J285	Control unit with display in dash panel insert
T10b	10-pin connector, black, connector point under relay carrier
T10g	10-pin connector, brown, connector point under relay carrier
T10p	10-pin connector, behind dash panel, centre
T12	12-pin connector
T12a	12-pin connector, behind dash panel, centre
T16a	16-pin connector
T16b	16-pin connector
T32	32-pin connector, blue, on dash panel insert
T32a	32-pin connector, green, on dash panel insert
T121	121-pin connector
76	Earth point, near selector mechanism
A27	Connection (speed signal), in dash panel wiring harness
B102	Earth connection, in front left interior wiring harness
L37	Connection -2-, in Climatronic controls wiring harness

ws	=	white
sw	=	black
ro	=	red
br	=	brown
gn	=	green
bl	=	blue
gr	=	grey
li	=	purple
ge	=	yellow
or	=	orange
rs	=	pink

Protected by copyright. Copying for private or commercial purposes, in part or in whole, is not permitted unless authorised by Volkswagen AG. Volkswagen AG does not guarantee or accept any liability with respect to the correctness of information in this document. Copyright by Volkswagen AG.
satelettronica

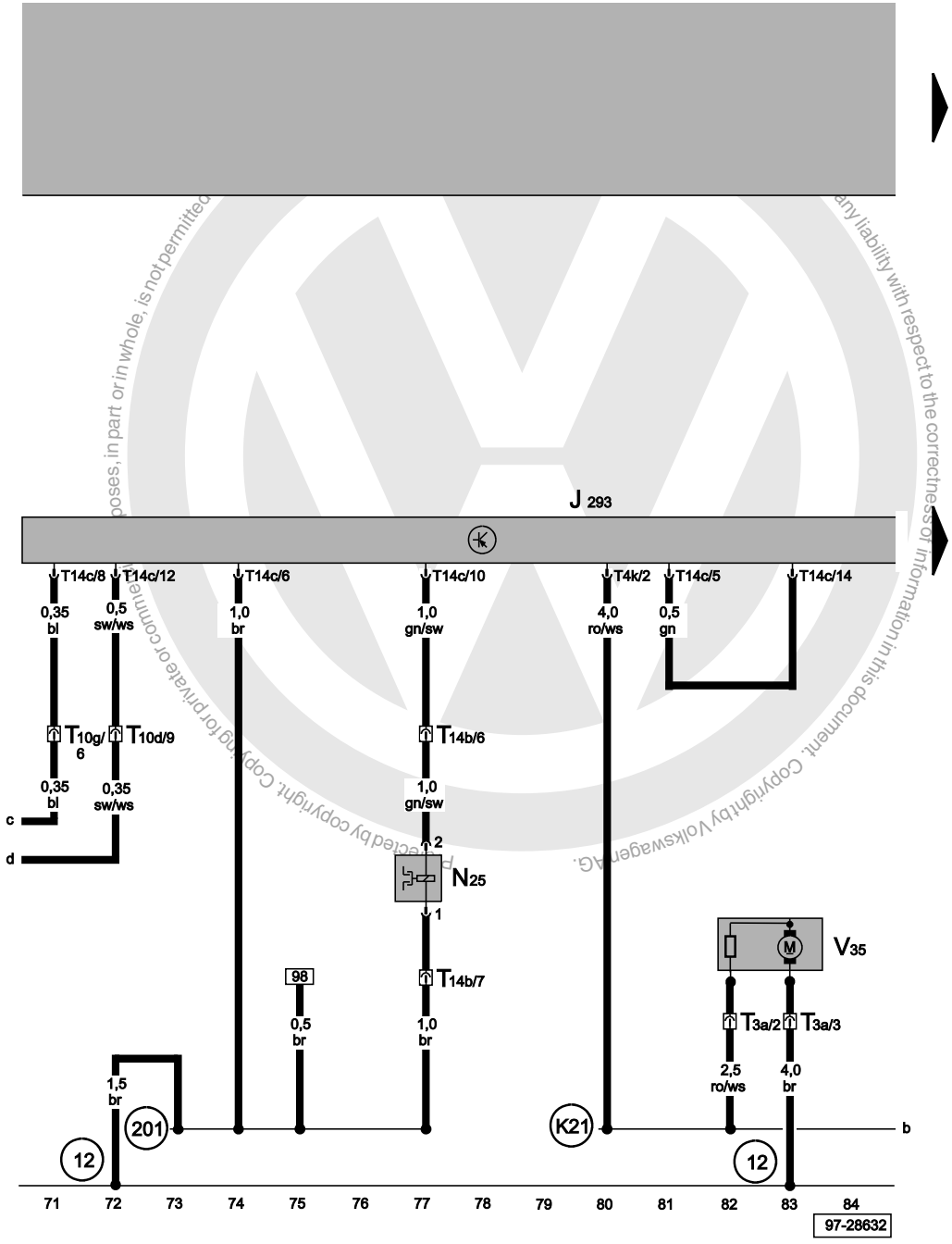

Radiator fan control unit, radiator fan, air conditioning system magnetic coupling

J293	Radiator fan control unit, in engine compartment, front left
N25	Air conditioning system magnetic coupling
T3a	3-pin connector, in engine compartment, front left
T4k	4-pin connector
T10d	10-pin connector, red, connector point under relay carrier
T10g	10-pin connector, brown, connector point under relay carrier
T14b	14-pin connector, in engine compartment, left
T14c	14-pin connector
V35	Radiator fan, right
12	Earth point, in engine compartment, left
201	Earth connection -5-, in engine compartment wiring harness
K21	Connection -1-, in radiator fan wiring harness

ws	=	white
sw	=	black
ro	=	red
br	=	brown
gn	=	green
bl	=	blue
gr	=	grey
li	=	purple
ge	=	yellow
or	=	orange
rs	=	pink

satelettronica

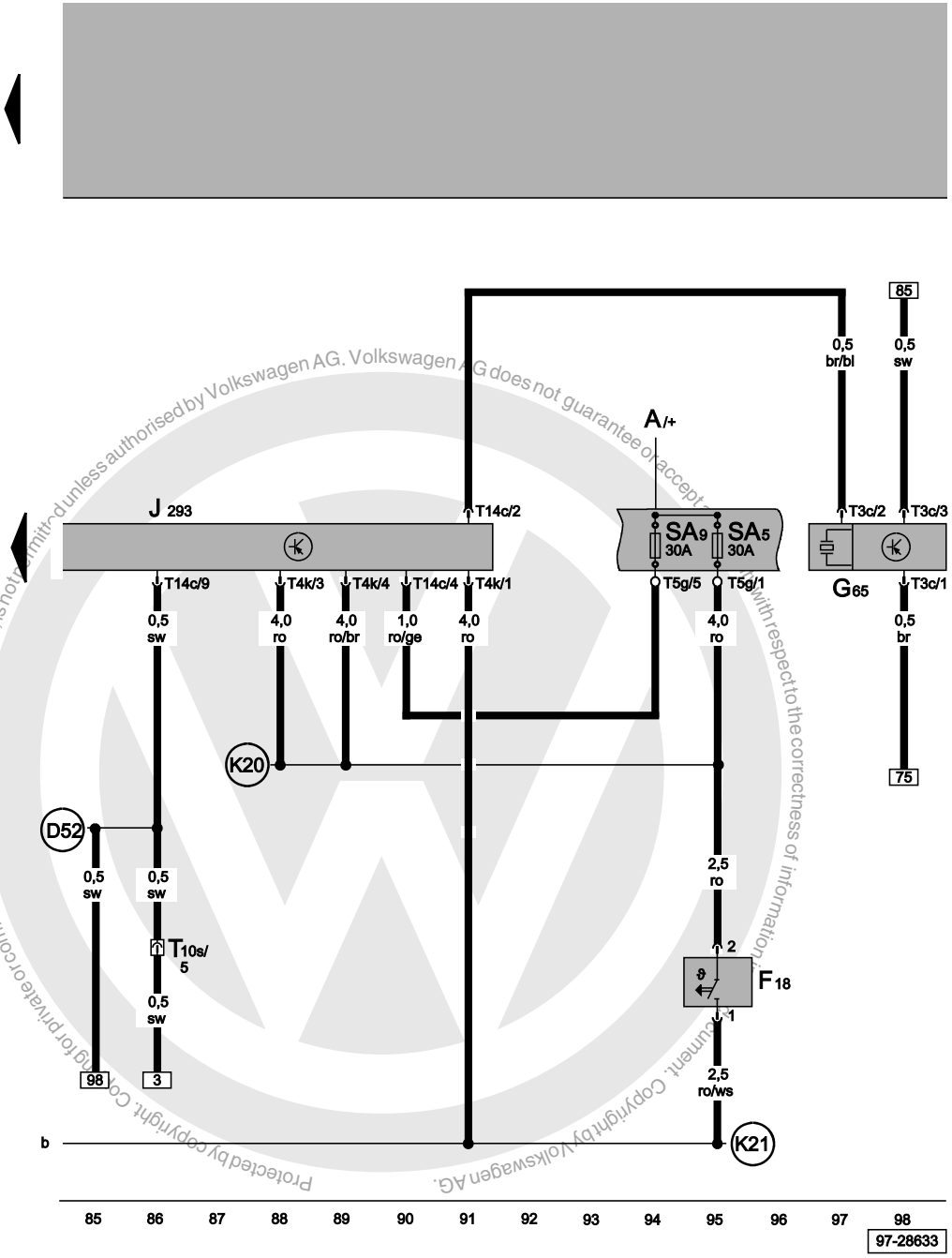

Radiator fan control unit, radiator fan thermo-switch, high pressure sender

A	Battery
F18	Radiator fan thermo-switch
G65	High pressure sender
J293	Radiator fan control unit, in engine compartment, front left
SA5	Fuse -5- (30), in battery fuse box
SA9	Fuse -9- (30), in battery fuse box
T3c	3-pin connector
T4k	4-pin connector
T5g	5-pin connector
T10s	10-pin connector, green, connector point under relay carrier
T14c	14-pin connector
D52	Positive (+) connection (15a) , in engine compartment wiring harness
K20	Positive (+) connection -1- (30), in radiator fan wiring harness
K21	Connection -1-, in radiator fan wiring harness

ws	=	white
sw	=	black
ro	=	red
br	=	brown
gn	=	green
bl	=	blue
gr	=	grey
li	=	purple
ge	=	yellow
or	=	orange
rs	=	pink

Protected by copyright. Copying for private or commercial purposes, in part or in whole, is not permitted unless authorised by Volkswagen AG. Volkswagen AG does not guarantee or accept any liability with respect to the correctness of information in this document. Copyright by Volkswagen AG.

satelettronica

1.4 ltr./55 kW - Turbo diesel engine with unit injectors, engine codes AMF

From May 2000

For alternatives to relay and fuse positions as well as multi-pin connector wiring - see "Fitting locations" section.

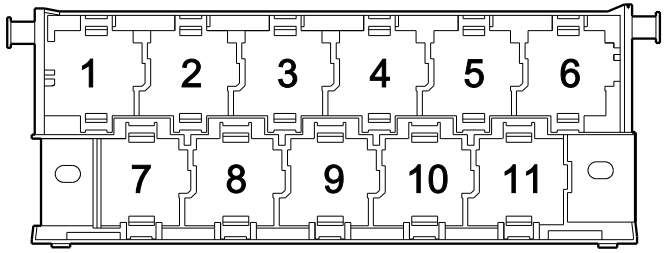

97-22850

Fuse colours

30 A - green
25 A - white
20 A - yellow
15 A - blue
10 A - red
7.5 A - brown
5 A - beige
3 A - lilac

Protected by copyright. Copying for private or commercial purposes, in part or in whole, is not permitted unless authorised by Volkswagen AG. Volkswagen AG does not guarantee or accept any liability with respect to the correctness of information in this document. Copyright by Volkswagen AG.
satelettronica

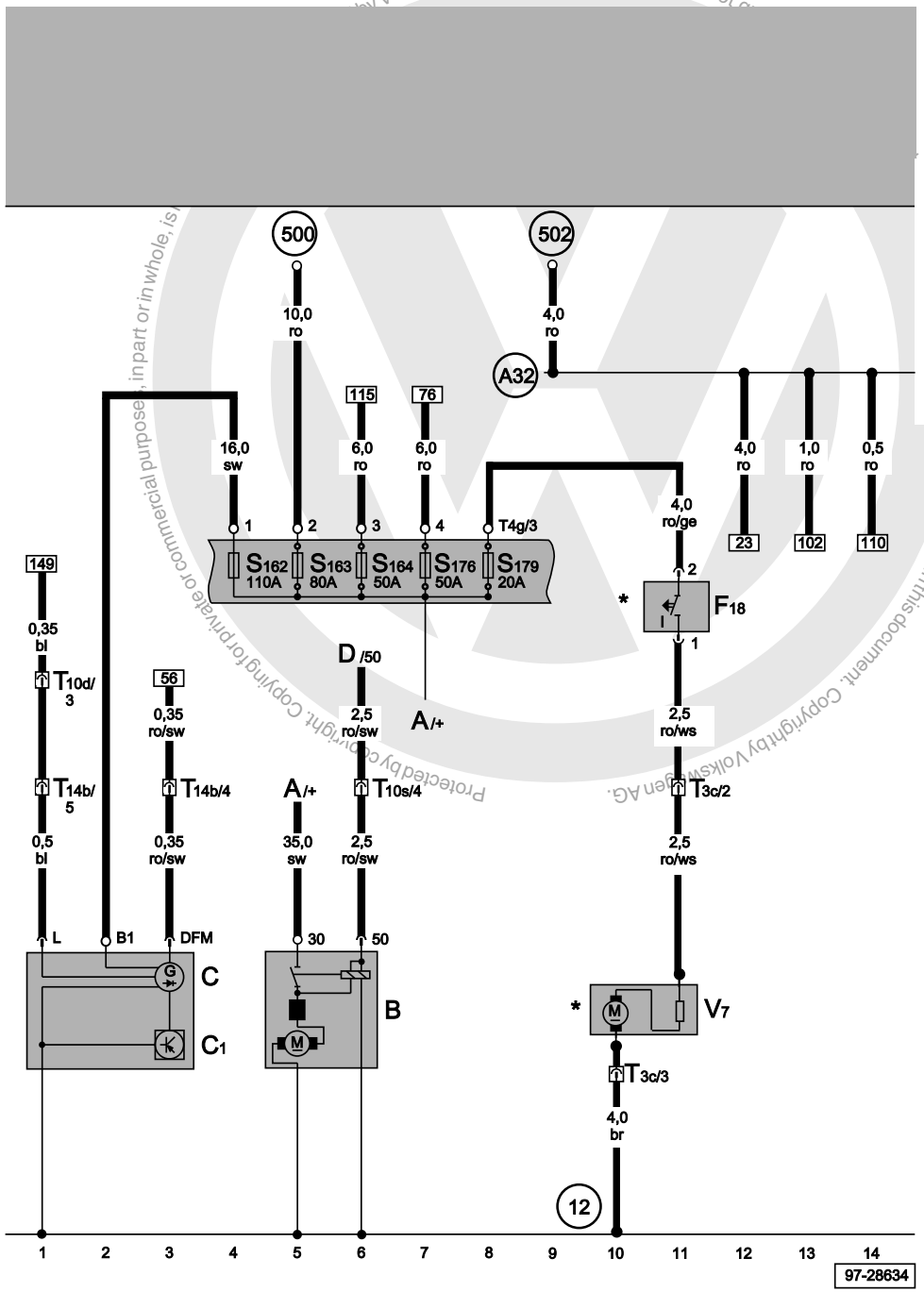

Alternator, voltage regulator, starter

A	Battery
B	Starter
C	Alternator
C1	Voltage regulator
D	Ignition/starter switch
F18	Radiator fan thermo-switch
S162	Fuse -1- (30), in fuse box/battery
S163	Fuse -2- (30), in fuse box/battery
S164	Fuse -3- (30), in fuse box/battery
S176	Fuse -4- (30), in battery fuse box
S179	Fuse -7- (30), in battery fuse box
T3c	3-pin connector, black, on radiator fan
T10d	10-pin connector, red, connector point under relay carrier
T10s	10-pin connector, light green, connector point under relay carrier
T14b	14-pin connector, in engine compartment, left
V7	Radiator fan
12	Earth point, in engine compartment, left
500	Screw connection -1- (30), on relay plate
502	Screw connection -1- (30a), on relay plate
A32	Positive (+) connection (30), in dash panel wiring harness
*	Only models without air conditioner

ws	=	white
sw	=	black
ro	=	red
br	=	brown
gn	=	green
bl	=	blue
gr	=	grey
li	=	purple
ge	=	yellow
or	=	orange
rs	=	pink

satelettronica

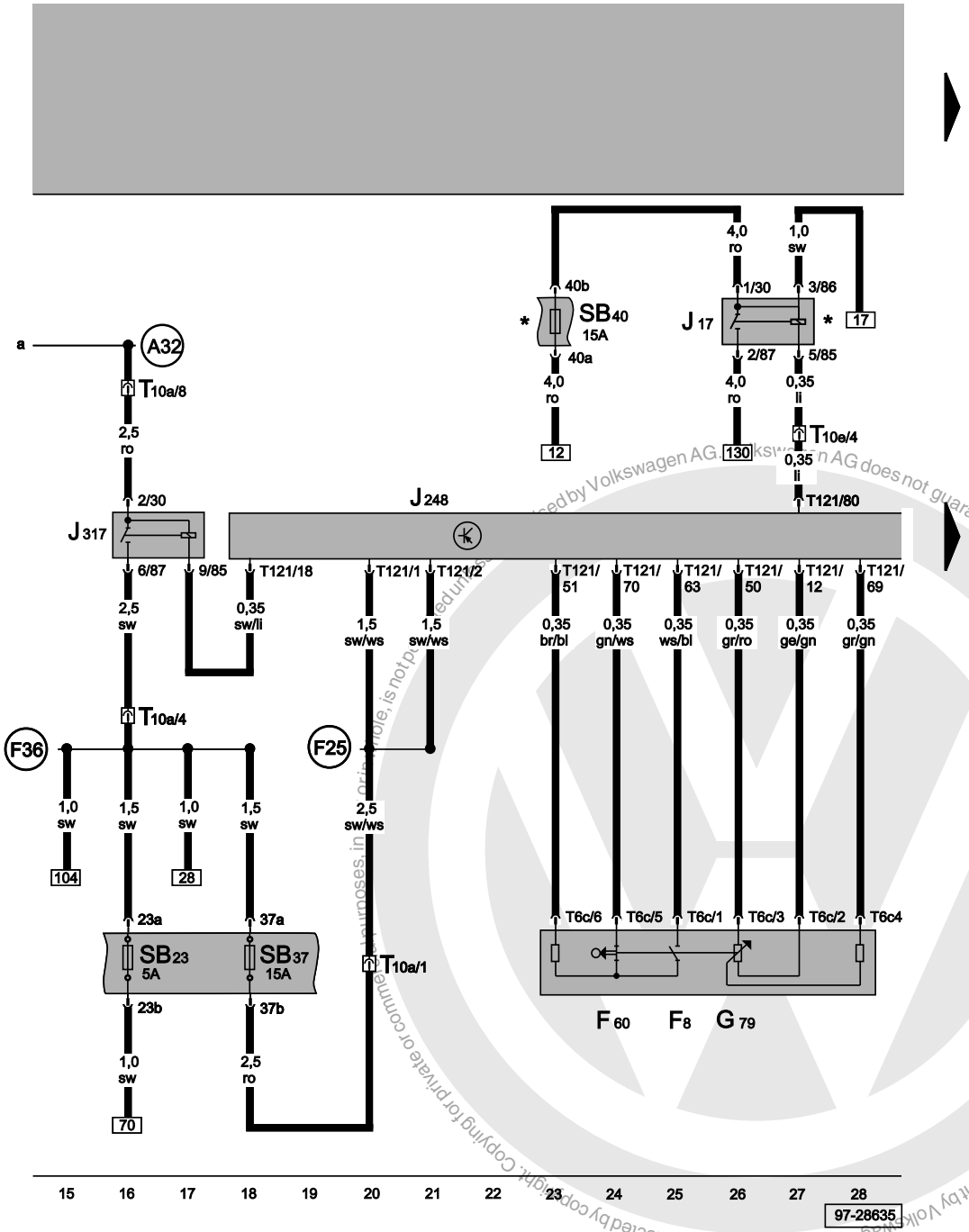

Diesel direct injection system control unit, voltage supply relay, kick-down switch, idling switch, accelerator pedal position sender, fuel pump relay

F8	Kick-down switch
F60	Idling switch
G79	Accelerator pedal position sender
J17	Fuel pump relay
J248	Diesel direct injection system control unit, in plenum chamber, centre
J317	Terminal 30 voltage supply relay, on relay carrier
SB23	Fuse -23- in fuse box
SB37	Fuse -37- in fuse box
SB40	Fuse -37- in fuse box
T6c	6-pin connector, on left under dash panel
T10a	10-pin connector, green, connector point under relay carrier
T10e	10-pin connector, pink, connector point under relay carrier
T121	121-pin connector, on diesel direct injection system control unit
A32	Positive (+) connection (30), in dash panel wiring harness
F36	Connection (87a), in diesel direct injection system wiring harness
F25	Connection (1), in diesel direct injection wiring harness
*	Not with all levels of equipment

ws	=	white
sw	=	black
ro	=	red
br	=	brown
gn	=	green
bl	=	blue
gr	=	grey
li	=	purple
ge	=	yellow
or	=	orange
rs	=	pink

Protected by copyright. Copying for private or commercial purposes, in whole or in part, is not permitted unless authorised by Volkswagen AG. Volkswagen AG does not guarantee or accept any liability with respect to the correctness of information in this document. Copyright by Volkswagen AG.

satelettronica

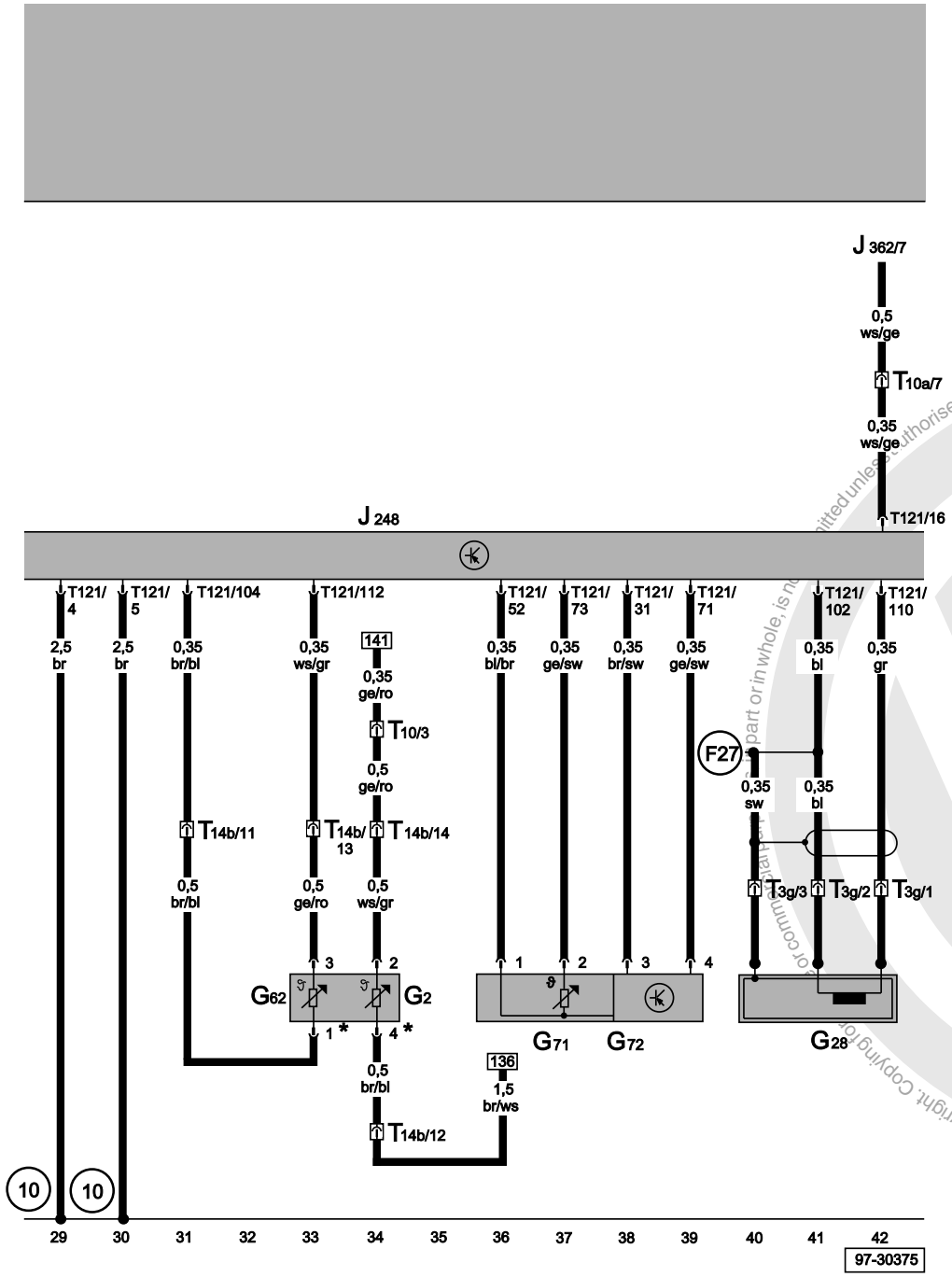

Diesel direct injection system control unit, coolant temperature sender, intake manifold pressure sender, intake manifold temperature sender, engine speed sender

G2	Coolant temperature sender
G28	Engine speed sender
G62	Coolant temperature sender
G71	Intake manifold pressure sender
G72	Intake manifold temperature sender
J248	Diesel direct injection system control unit, in plenum chamber, centre
J362	Immobilizer control unit, behind dash panel, left
T3g	3-pin connector, on engine front
T10	10-pin connector, white, connector point under relay carrier
T10a	10-pin connector, green, connector point under relay carrier
T14b	14-pin connector, in engine compartment, left
T121	121-pin connector, on diesel direct injection system control unit
10	Earth point, in plenum chamber
F27	Connection (screening), in diesel direct injection system wiring harness
*	For additional heater connections 1 and 4 changed

ws	=	white
sw	=	black
ro	=	red
br	=	brown
gn	=	green
bl	=	blue
gr	=	grey
li	=	purple
ge	=	yellow
or	=	orange
rs	=	pink

satelettronica

Diesel direct injection system control unit, unit injector solenoid valves, hall sender (for camshaft position)

G40	Hall sender (for camshaft position)
J248	Diesel direct injection system control unit, in engine compartment, left
N240	Unit injector solenoid valve, No. 1 cyl.
N241	Unit injector solenoid valve, No. 2 cyl.
N242	Unit injector solenoid valve, No. 3 cyl.
T3l	3-pin connector, on engine front
T8l	8-pin connector, in engine compartment, left
T121	121-pin connector, on diesel direct injection system control unit
D101	Connection -1-, in engine compartment wiring harness
F26	Connection -2-, in diesel direct injection system wiring harness

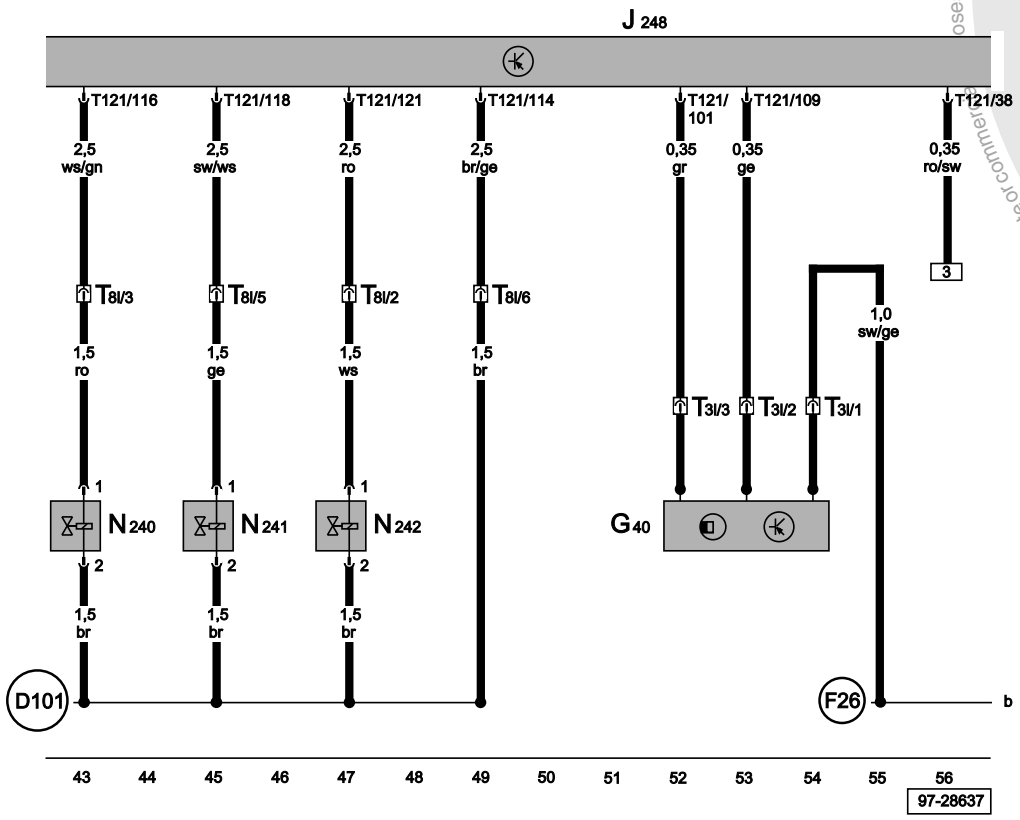

ws	=	white
sw	=	black
ro	=	red
br	=	brown
gn	=	green
bl	=	blue
gr	=	grey
li	=	purple
ge	=	yellow
or	=	orange
rs	=	pink

Protected by copyright. Copying for private or commercial purposes, in part or in whole, is not permitted unless authorised by Volkswagen AG. Volkswagen AG does not guarantee or assume any liability with respect to the correctness of information in this document. Copyright by Volkswagen AG.
satelettronica

Diesel direct injection system control unit, air mass meter, intake manifold flap change-over valve, exhaust gas recirculation valve, charge pressure control solenoid valve

G70	Air mass meter
J248	Diesel direct injection system control unit, in engine compartment, left
N18	Exhaust gas recirculation valve
N75	Charge pressure control solenoid valve
N239	Intake manifold flap change-over valve
T5	5-pin connector
T10a	10-pin connector, green, connector point under relay carrier
T10c	10-pin connector, blue, connector point under relay carrier
T121	121-pin connector, on diesel direct injection system control unit
F26	Connection -2-, in diesel direct injection system wiring harness

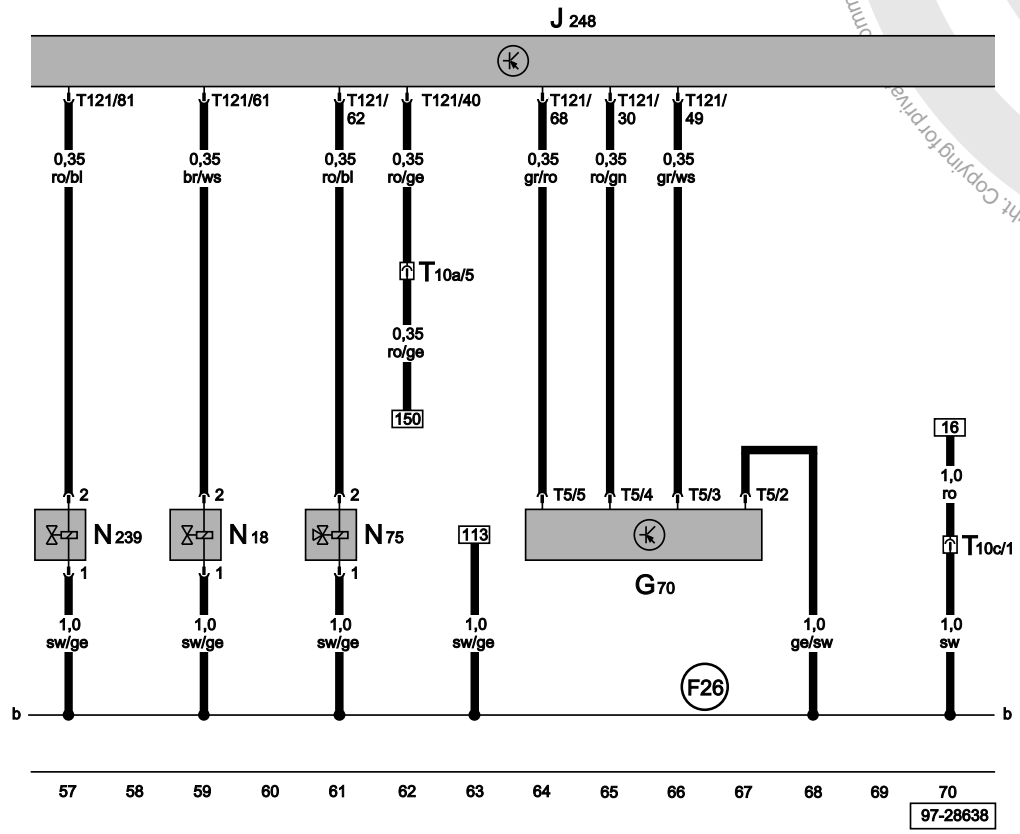

ws	=	white
sw	=	black
ro	=	red
br	=	brown
gn	=	green
bl	=	blue
gr	=	grey
li	=	purple
ge	=	yellow
or	=	orange
rs	=	pink

Protected by copyright. Copying for private or commercial purposes, in part or in whole, is not permitted unless authorised by Volkswagen AG. Volkswagen AG does not guarantee or accept any liability with respect to the correctness of information in this document. Copyright by Volkswagen AG.
satelettronica

Diesel direct injection system control unit, coolant heater element, high and low heat output relay

J248	Diesel direct injection system control unit, in engine compartment, left
J359	Low heat output relay, on relay carrier
J360	High heat output relay, on relay carrier
S276	Heater element fuse -1-
S277	Heater element fuse -2-
S278	Heater element fuse -3-
Q7	Coolant heating elements
T121	121-pin connector, on diesel direct injection system control unit
A1	Positive (+) connection (30a), in dash panel wiring harness
D98	Connection (glow plugs), in engine compartment wiring harness
F26	Connection -2-, in diesel direct injection system wiring harness

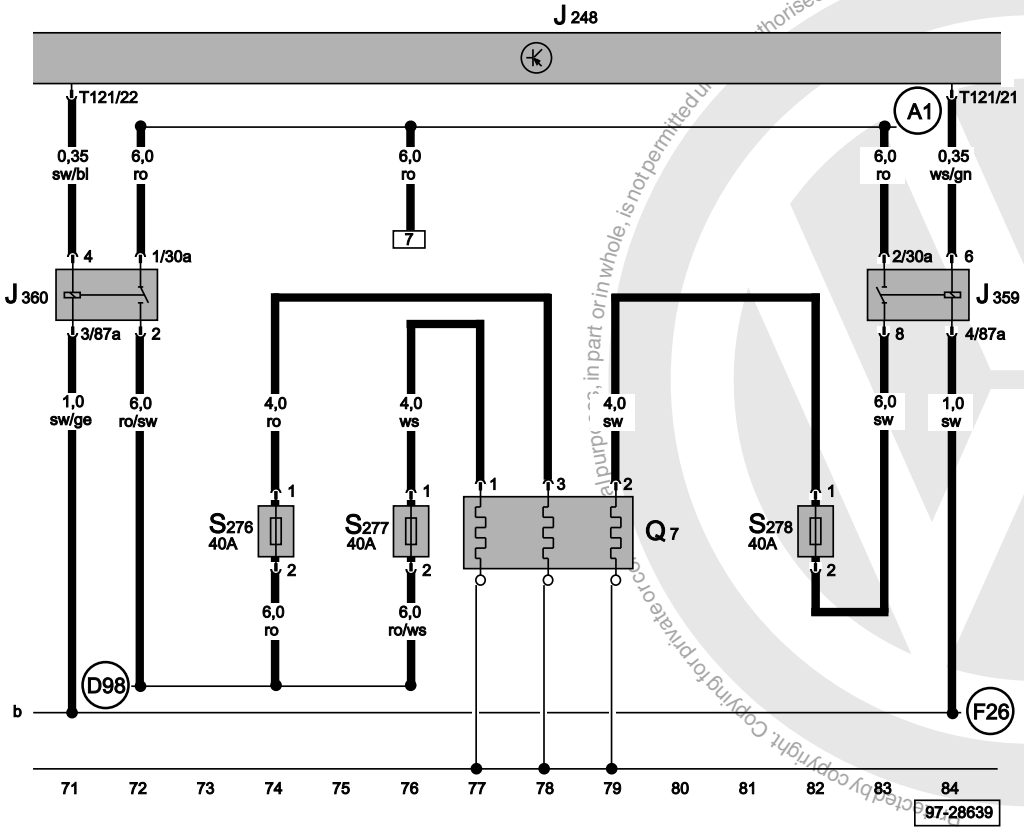

ws	=	white
sw	=	black
ro	=	red
br	=	brown
gn	=	green
bl	=	blue
gr	=	grey
li	=	purple
ge	=	yellow
or	=	orange
rs	=	pink

satelettronica

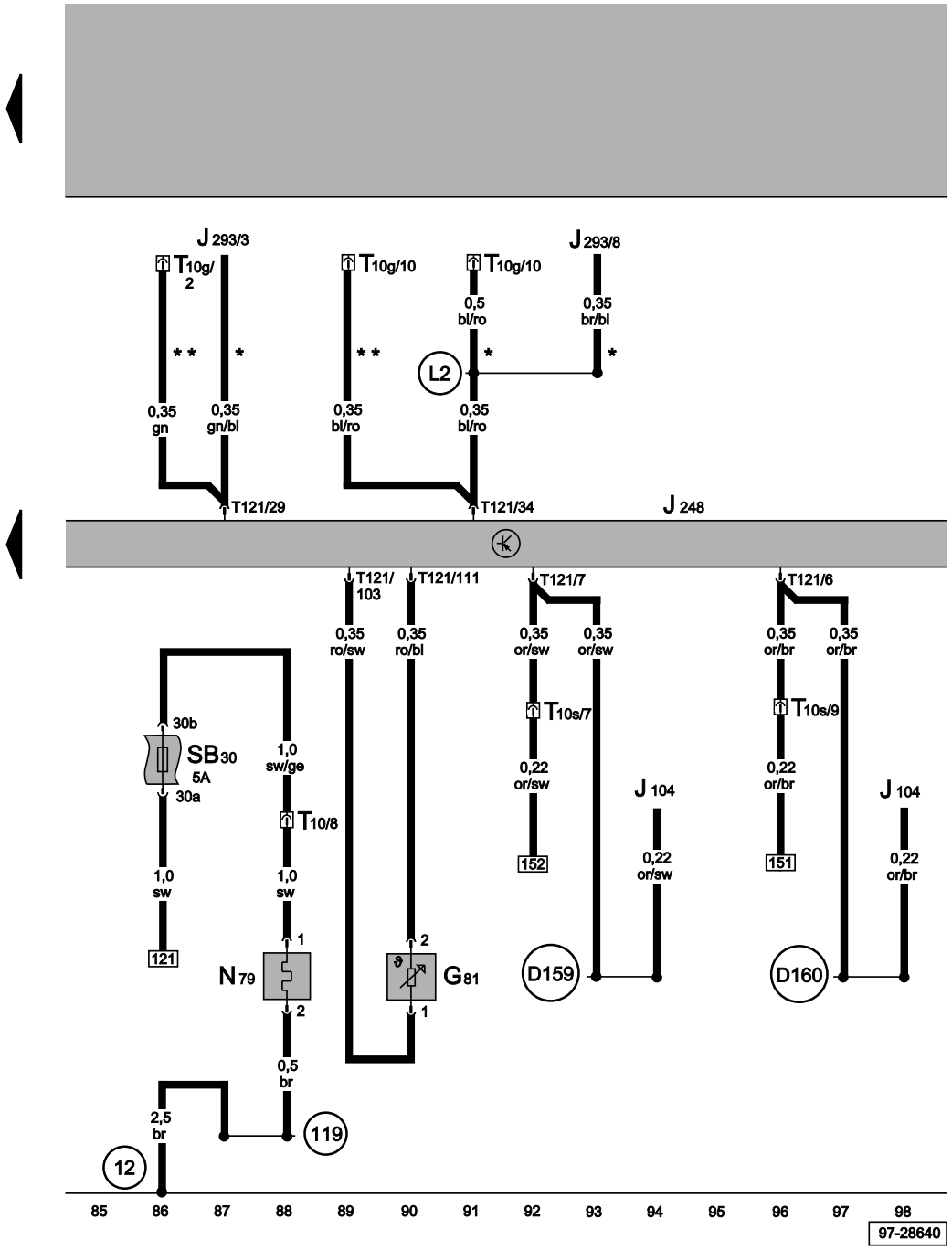

Diesel direct injection system control unit, fuel temperature sender, heater element (crankcase breather)

G81	Fuel temperature sender
J104	ABS/ABS with EDL control unit
J248	Diesel direct injection system control unit, in plenum chamber, centre
J293	Radiator fan control unit
N79	Heater element (crankcase breather)
SB30	Fuse -30- in relay plate fuse box
T10	10-pin connector, white, connector point under relay carrier
T10g	10-pin connector, brown, connector point under relay carrier
T10s	10-pin connector, light green, connector point under relay carrier
T121	121-pin connector, on diesel direct injection system control unit
12	Earth point, in engine compartment, left
119	Earth connection -1-, in headlight wiring harness
D159	Connection (high bus), in engine compartment wiring harness
D160	Connection (low bus), in engine compartment wiring harness
L2	Connection, in air conditioner wiring harness
*	Only models with manual control air conditioner
**	Only models with Climatronic

ws	=	white
sw	=	black
ro	=	red
br	=	brown
gn	=	green
bl	=	blue
gr	=	grey
li	=	purple
ge	=	yellow
or	=	orange
rs	=	pink

Protected by copyright. Copying for private or commercial purposes, in part or in whole, is not permitted unless authorised by Volkswagen AG. Volkswagen AG does not guarantee or accept any liability with respect to the correctness of information in this document. Copyright by Volkswagen AG.
satelettronica

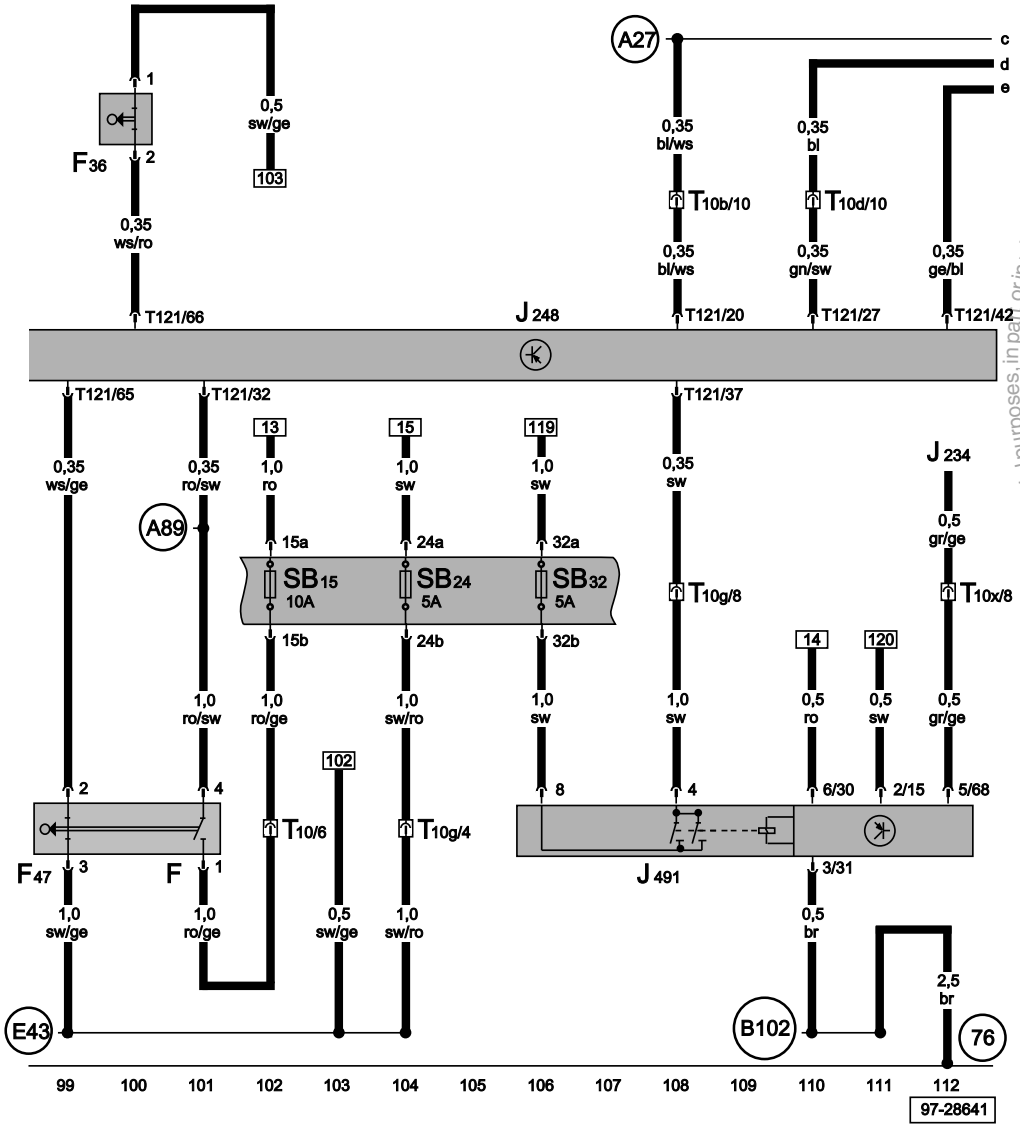

Diesel direct injection system control unit, fuel shut-off control unit (Crash), brake pedal switch for diesel direct inj. system, brake light switch, clutch pedal switch

F	Brake light switch
F36	Clutch pedal switch
F47	Brake pedal switch for diesel direct inj. system
J234	Airbag control unit
J248	Diesel direct injection system control unit, in engine compartment, left
J491	Fuel shut-off control unit (Crash)
SB15	Fuse -15- in fuse box
SB24	Fuse -24- in fuse box
SB32	Fuse -32- in fuse box
T10	10-pin connector, white, connector point under relay carrier
T10b	10-pin connector, black, connector point under relay carrier
T10d	10-pin connector, red, connector point under relay carrier
T10g	10-pin connector, brown, connector point under relay carrier
T10x	10-pin connector, yellow, connector point under relay carrier
T121	121-pin connector, on diesel direct injection system control unit
76	Earth point, near selector mechanism
A27	Connection (speed signal), in dash panel wiring harness
A89	Connection -2- (54), in dash panel wiring harness
B102	Earth connection, in front left interior wiring harness
E43	Connection (87), in injection system wiring harness

ws	=	white
sw	=	black
ro	=	red
br	=	brown
gn	=	green
bl	=	blue
gr	=	grey
li	=	purple
ge	=	yellow
or	=	orange
rs	=	pink

Protected by copyright. Copying for private or commercial purposes, in part or in whole, is not permitted unless authorised by Volkswagen AG. Volkswagen AG does not guarantee or accept any liability with respect to the correctness of information in this document. Copyright by Volkswagen AG.
satelettronica

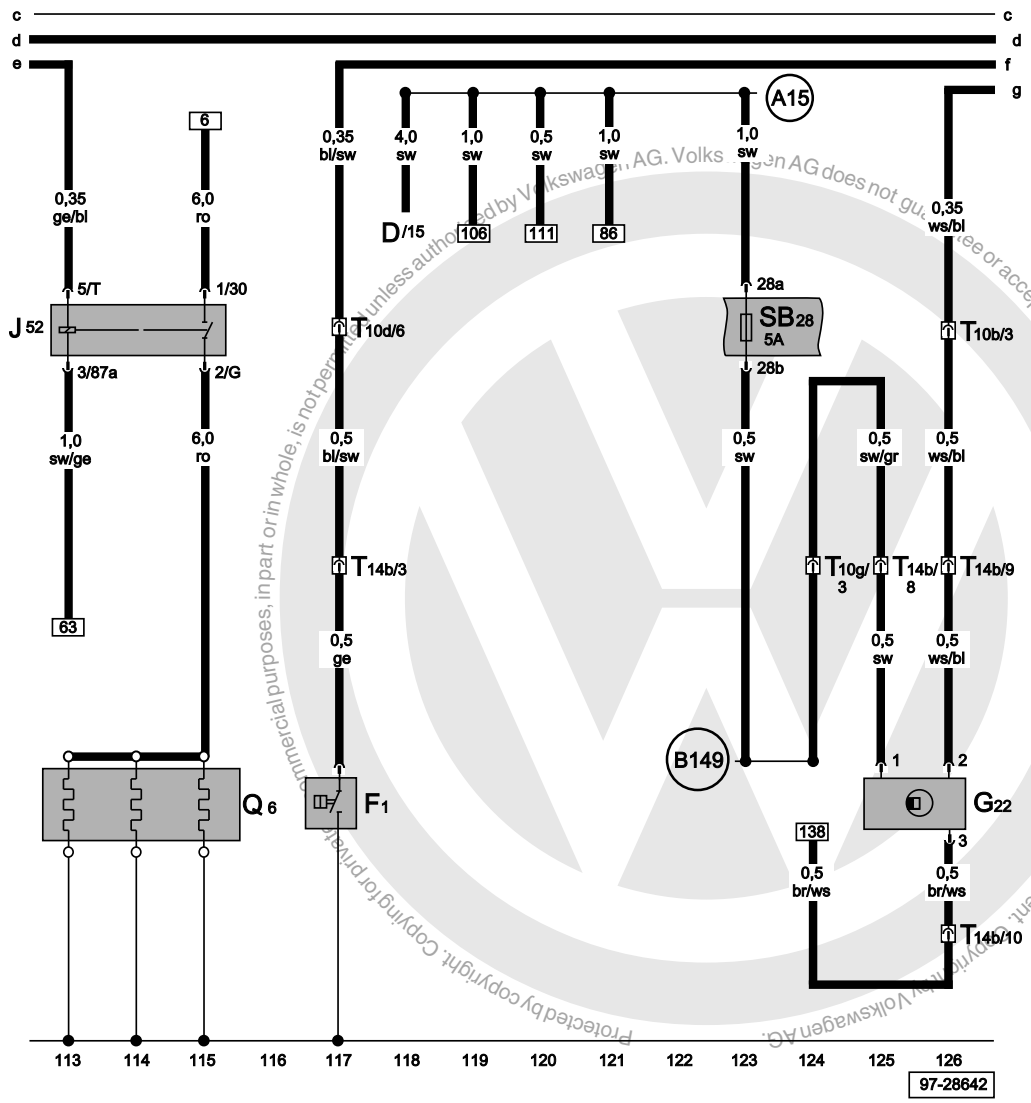

Glow plug relay, speedometer sender, oil pressure switch, glow plugs - engine

D	Ignition/starter switch
F1	Oil pressure switch
G22	Speedometer sender (Hall sender, on gearbox)
J52	Glow plug relay, on relay carrier
Q6	Glow plugs - (engine)
SB28	Fuse -28- in fuse box
T10b	10-pin connector, black, connector point under relay carrier
T10d	10-pin connector, red, connector point under relay carrier
T10g	10-pin connector, brown, connector point under relay carrier
T14b	14-pin connector, in engine compartment, left
A15	Positive (+) connection (15), in instruments wiring harness
B149	Positive (+) connection -2- (15a), in interior wiring harness

ws	=	white
sw	=	black
ro	=	red
br	=	brown
gn	=	green
bl	=	blue
gr	=	grey
li	=	purple
ge	=	yellow
or	=	orange
rs	=	pink

Protected by copyright. Copying for private or commercial purposes, in part or in whole, is not permitted unless authorised by Volkswagen AG. Volkswagen AG does not guarantee or accept any liability with respect to the correctness of information in this document. Copyright by Volkswagen AG.

satelettronica

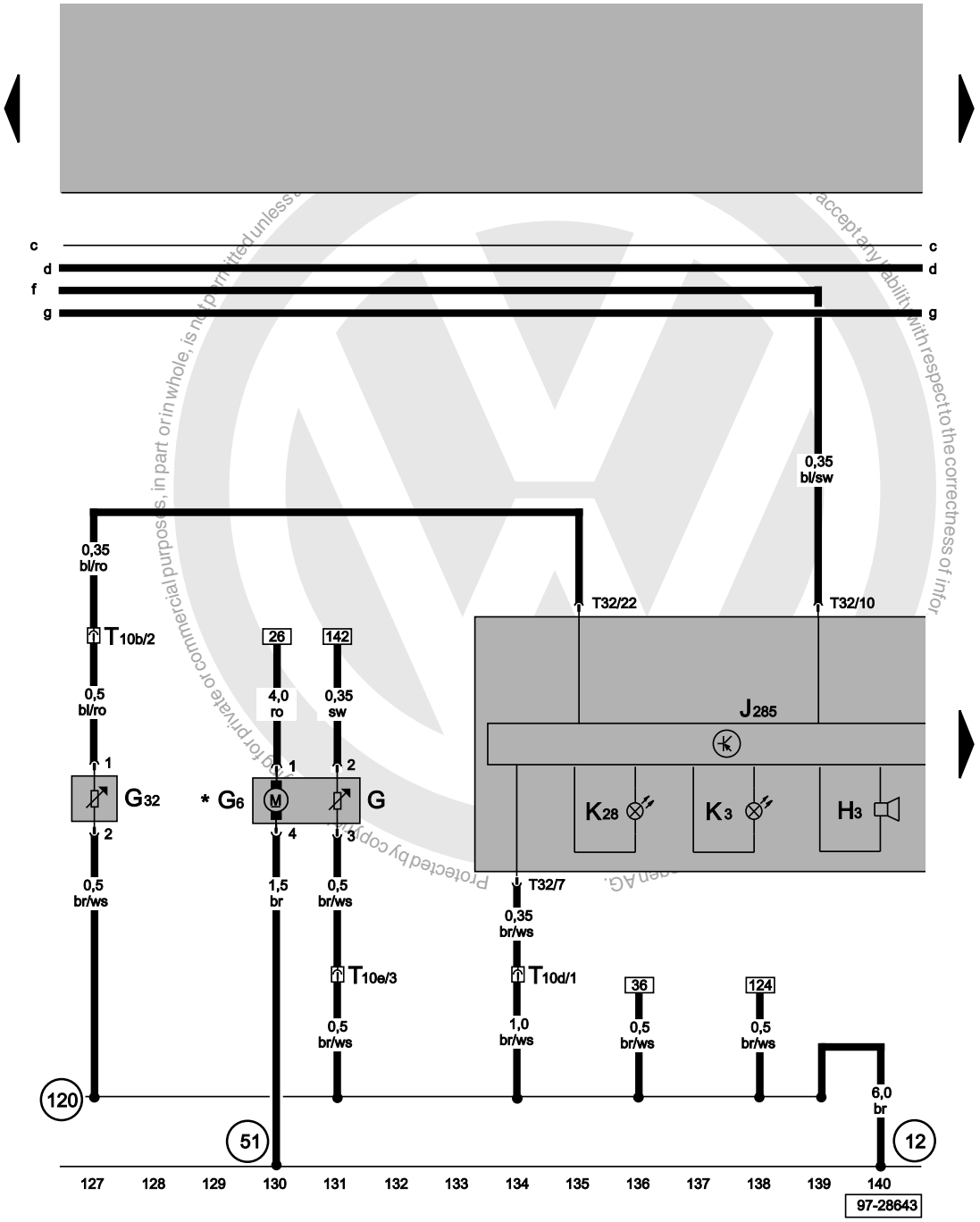

Dash panel insert, fuel gauge sender, coolant temperature/ coolant shortage warning lamp, optical and acoustical oil pressure warning, fuel pump (pre-supply pump)

G	Fuel gauge sender
G6	Fuel pump (pre-supply pump)
G32	Coolant shortage indicator sender
H3	Warning buzzer
J285	Control unit with display in dash panel insert
K3	Oil pressure warning lamp
K28	Coolant temperature/coolant shortage warning lamp
T10b	10-pin connector, black, connector point under relay carrier
T10d	10-pin connector, red, connector point under relay carrier
T10e	10-pin connector, pink, connector point under relay carrier
T32	32-pin connector, blue, on dash panel insert
12	Earth point, in engine compartment, left
51	Earth point, in engine compartment, left
120	Earth connection -2-, in headlight wiring harness
*	Not with all levels of equipment

ws	=	white
sw	=	black
ro	=	red
br	=	brown
gn	=	green
bl	=	blue
gr	=	grey
li	=	purple
ge	=	yellow
or	=	orange
rs	=	pink

satelettronica

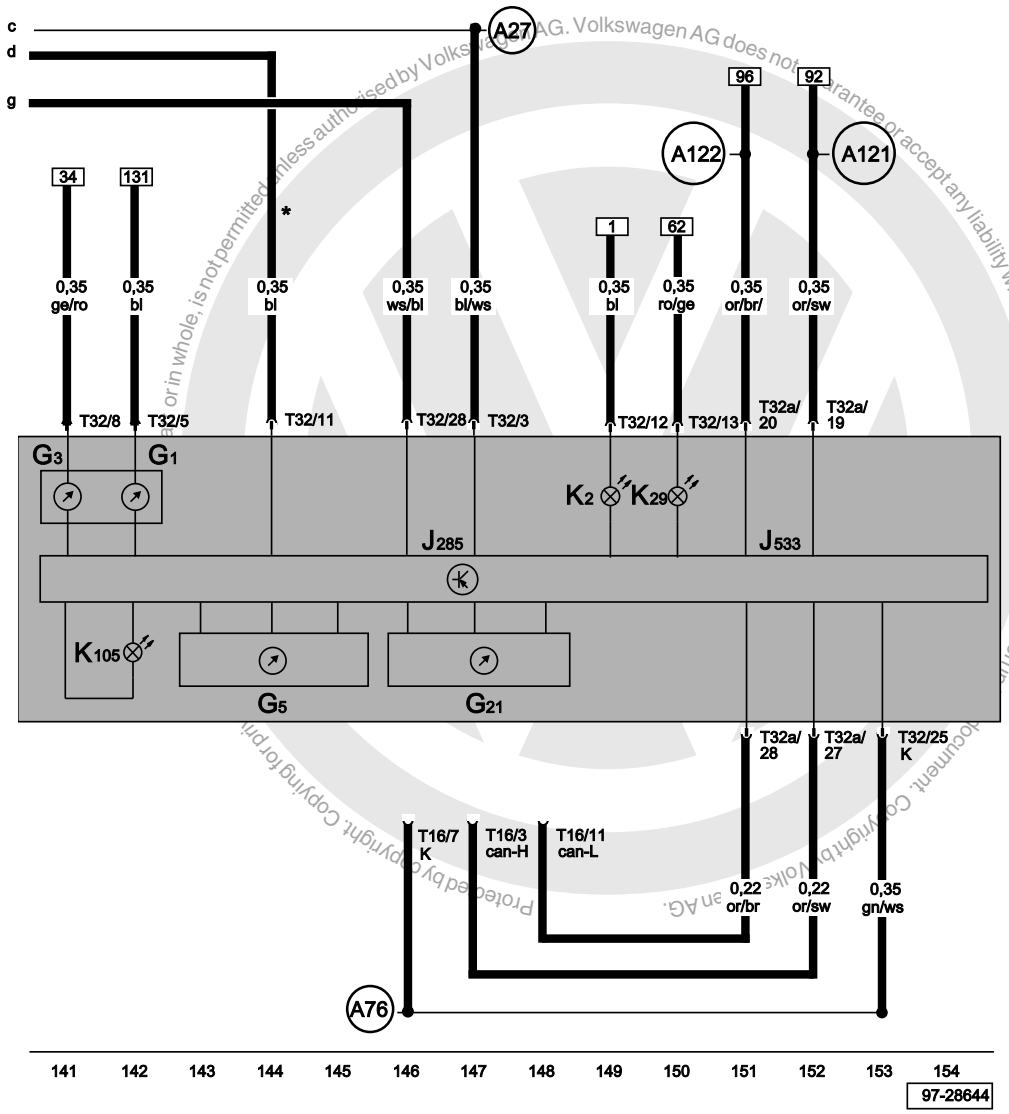

Dash panel insert, coolant temperature gauge, fuel gauge, rev. counter, speedometer, alternator warning lamp, self-diagnosis connection

G1	Fuel gauge
G3	Coolant temperature gauge
G5	Rev. counter
G21	Speedometer
J285	Control unit with display in dash panel insert
J533	Data bus diagnostic interface, in dash panel insert
K2	Alternator warning lamp
K29	Glow period warning lamp
K105	Reserve fuel warning lamp
T16	16-pin connector, self-diagnosis connection
T32	32-pin connector, blue, on dash panel insert
T32a	32-pin connector, green, on dash panel insert
A27	Connection (speed signal), in dash panel wiring harness
A76	Connection (diagnosis wire K), in dash panel wiring harness
A121	Connection (high bus), in dash panel wiring harness
A122	Connection (low bus), in dash panel wiring harness
*	Engine speed signal from engine control unit

ws	=	white
sw	=	black
ro	=	red
br	=	brown
gn	=	green
bl	=	blue
gr	=	grey
li	=	purple
ge	=	yellow
or	=	orange
rs	=	pink

Protected by copyright. Copying for private or in whole, is not permitted unless authorised by Volkswagen AG. Volkswagen AG does not guarantee or accept any liability with respect to the correctness of information in this document. Copyright by Volkswagen AG.

satelettronica

Air conditioner (manual)

⇒ **1.4 ltr./55 kW - Turbo diesel engine with unit injectors, engine codes AMF**

From May 2000

For alternatives to relay and fuse positions as well as multi-pin connector wiring - see "Fitting locations" section.

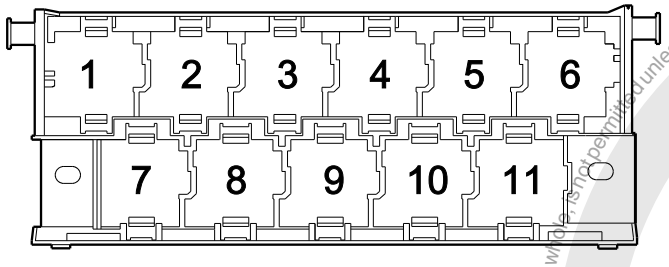

97-22850

Fuse colours

30 A - green
25 A - white
20 A - yellow
15 A - blue
10 A - red
7.5 A - brown
5 A - beige
3 A - lilac

Protected by copyright. Copying for private or commercial purposes, in part or in whole, is not permitted unless authorised by Volkswagen AG. Volkswagen AG does not guarantee or accept any liability with respect to the correctness of information in this document. Copyright by Volkswagen AG.

satelettronica

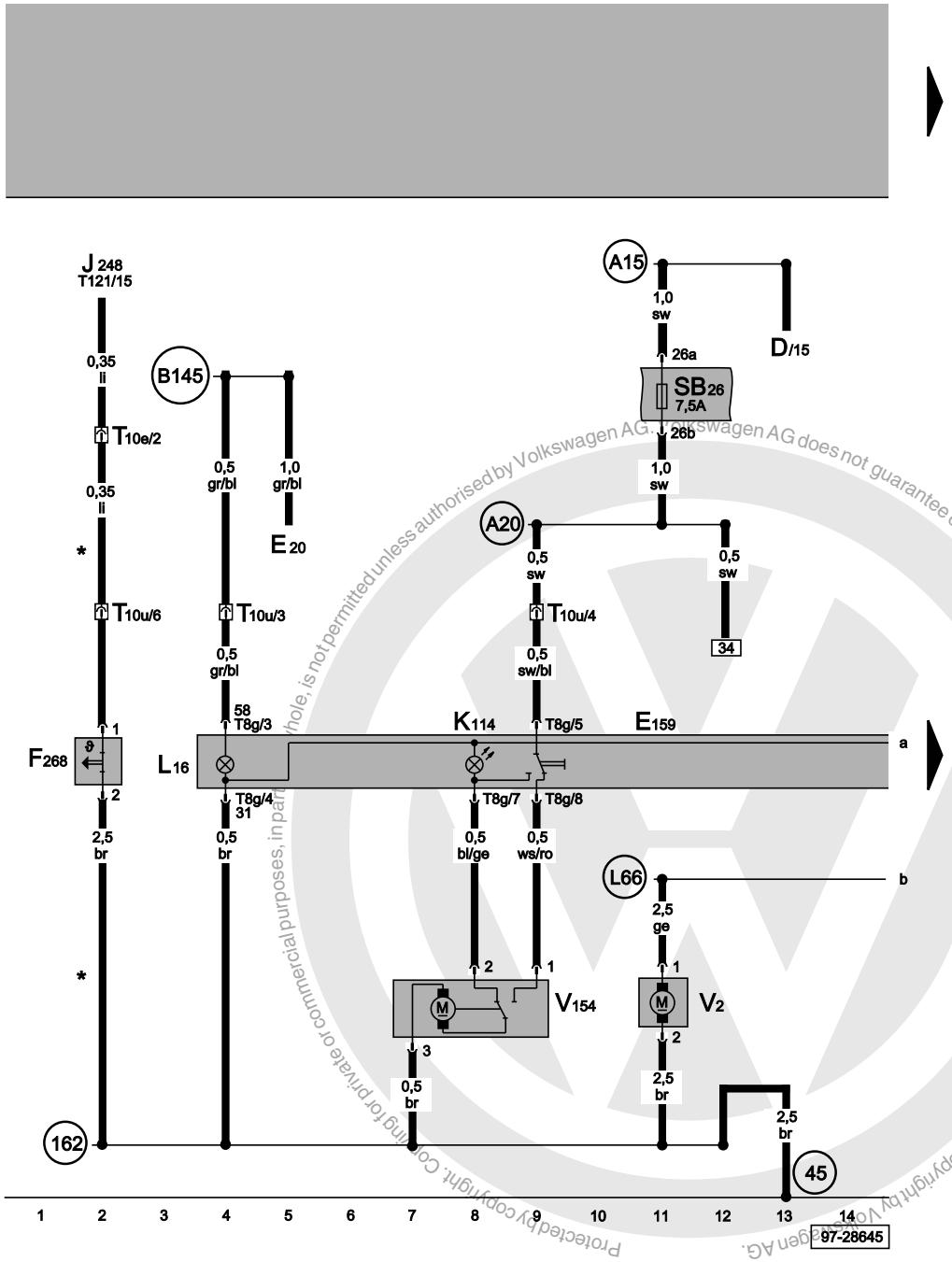

Fresh air/air recirculating flap switch, fresh air blower, fresh/recirculating air flap control motor, additional heater, heater element contact switch

D	Ignition/starter switch
E20	Switches and instruments - lighting control
E159	Fresh air/air recirculating flap switch
F268	Additional heater, heater element contact switch
J248	Diesel direct injection system control unit
K114	Fresh air/air recirculation warning lamp
L16	Fresh air controls light bulb
SB26	Fuse -26- in relay plate fuse box
T8g	8-pin connector, behind dash panel, centre
T10e	10-pin connector, pink, connector point under relay carrier
T10u	10-pin connector, behind dash panel, centre
T121	121-pin connector
V2	Fresh air blower
V154	Fresh/recirculating air flap control motor
45	Earth point, behind dash panel - centre
162	Earth connection, in blower motor wiring harness
A15	Positive (+) connection (15), in instruments wiring harness
A20	Connection (15a), in dash panel wiring harness
B145	Positive (+) connection (58b), in interior wiring harness
L66	Connection, in heater blower wiring harness
*	Only models with electric additional heater

ws	=	white
sw	=	black
ro	=	red
br	=	brown
gn	=	green
bl	=	blue
gr	=	grey
li	=	purple
ge	=	yellow
or	=	orange
rs	=	pink

Protected by copyright. Copying for private or commercial purposes, in part or whole, is not permitted unless authorised by Volkswagen AG. Volkswagen AG does not guarantee or accept any liability with respect to the correctness of information in this document. Copyright by Volkswagen AG.

satelettronica

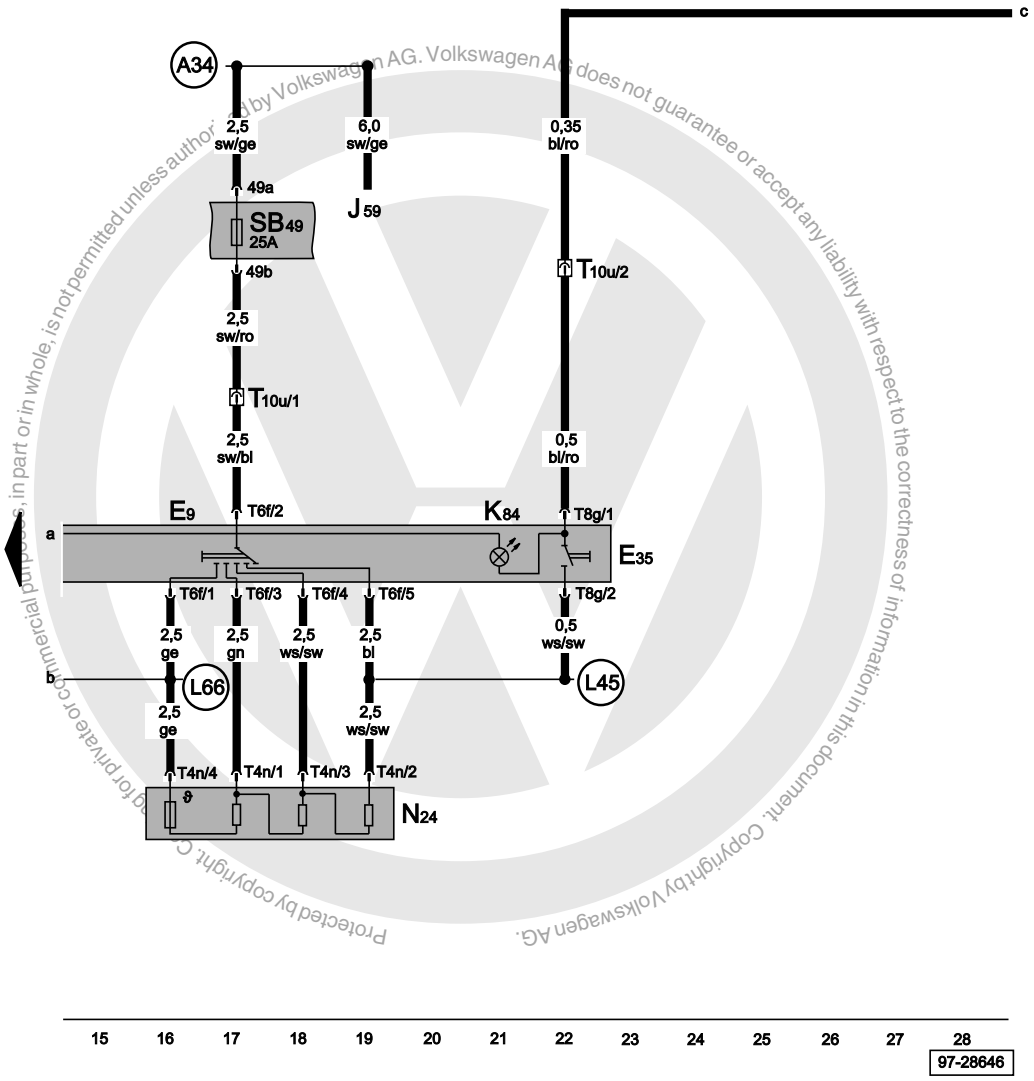

Fresh air blower switch, air conditioner switch

E9	Fresh air blower switch
E35	Air conditioner switch
J59	X contact relief relay
K84	Air conditioning system warning lamp
N24	Fresh air blower with overheating fuse series resistor
SB49	Fuse -49- in relay plate fuse box
T4n	4-pin connector, black, on fresh air blower series resistor
T6f	6-pin connector, behind dash panel
T8g	8-pin connector, behind dash panel
T10u	10-pin connector, behind dash panel
A34	Connection (75x), in dash panel wiring harness
L45	Connection, in air conditioner controls wiring harness
L66	Connection, in heater blower wiring harness

ws	=	white
sw	=	black
ro	=	red
br	=	brown
gn	=	green
bl	=	blue
gr	=	grey
li	=	purple
ge	=	yellow
or	=	orange
rs	=	pink

Protected by copyright. Copyright by Volkswagen AG. Volkswagen AG does not guarantee or accept any liability with respect to the correctness of information in this document. Copyright by Volkswagen AG. Reproduced for private or commercial purposes, in part or in whole, is not permitted unless authorised by Volkswagen AG.

satelettronica

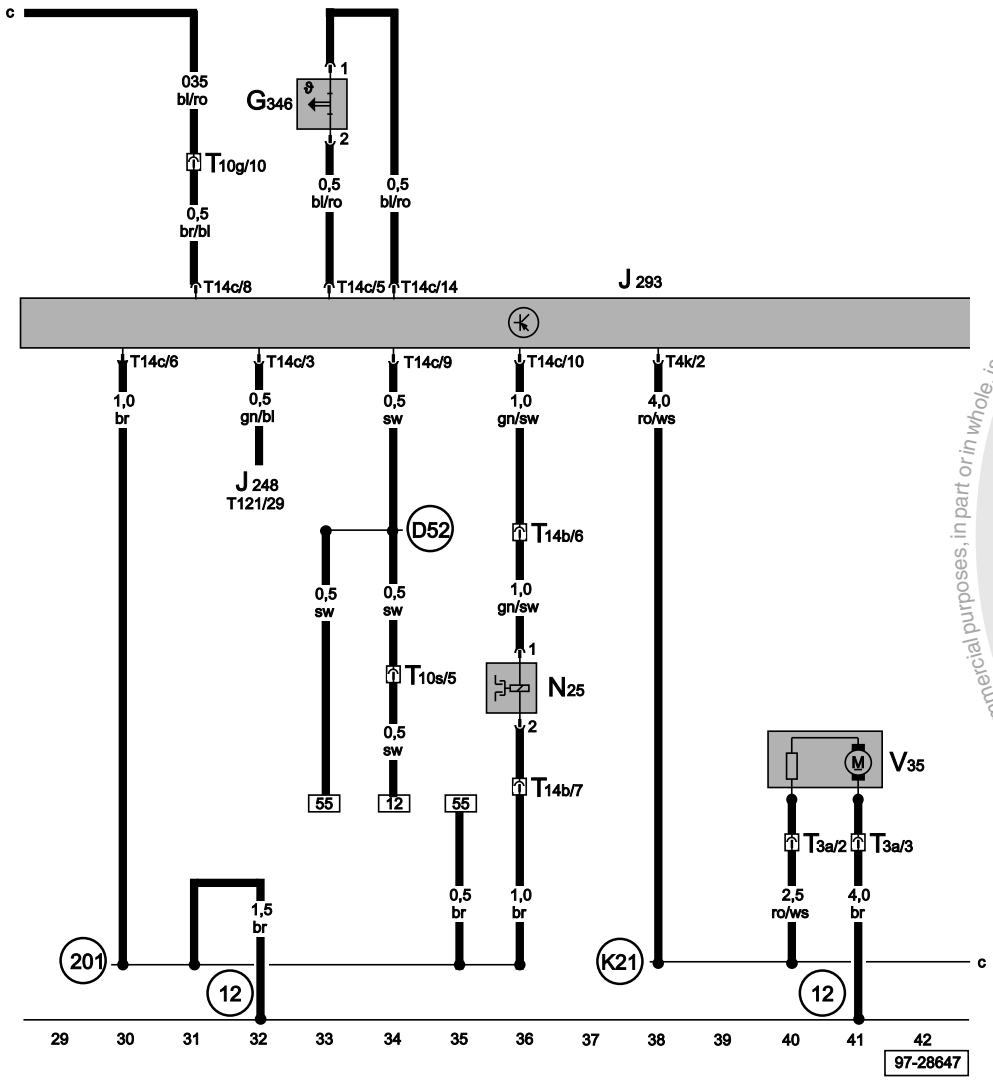

Radiator fan control unit, radiator fan, air conditioning system magnetic coupling, ambient temperature switch

G346	Temperature sender for compressor switch off
J248	Diesel direct injection system control unit
J293	Radiator fan control unit, in engine compartment, front left
N25	Air conditioning system magnetic coupling
T3a	3-pin connector, black, in engine compartment, front left
T4k	4-pin connector, black
T10g	10-pin connector, brown, connector point under relay carrier
T10s	10-pin connector, green, connector point under relay carrier
T14b	14-pin connector, in engine compartment, left
T14c	14-pin connector, black
T121	121-pin connector, on diesel direct injection system control unit
V35	Radiator fan
12	Earth point, in engine compartment, left
201	Earth connection -5-, in engine compartment wiring harness
D52	Positive (+) connection (15a) , in engine compartment wiring harness
K21	Connection -1-, in radiator fan wiring harness

ws	=	white
sw	=	black
ro	=	red
br	=	brown
gn	=	green
bl	=	blue
gr	=	grey
li	=	purple
ge	=	yellow
or	=	orange
rs	=	pink

Protected by copyright. Copying for private or commercial purposes, in part or in whole, is not permitted unless authorised by Volkswagen AG. Volkswagen AG does not guarantee or accept any liability with respect to the correctness of information in this document. Copyright by Volkswagen AG.
satelettronica

Radiator fan control unit, radiator fan thermo-switch, high pressure sender

A	Battery
F18	Radiator fan thermo-switch
G65	High pressure sender
J293	Radiator fan control unit, in engine compartment, front left
SA5	Fuse -5- (30), in battery fuse box
SA9	Fuse -9- (30), in battery fuse box
T3c	3-pin connector, black, on high pressure sender
T4g	4-pin connector, black, on battery fuse box
T4k	4-pin connector, black
T14c	14-pin connector, black
K20	Positive (+) connection -1- (30), in radiator fan wiring harness
K21	Connection -1-, in radiator fan wiring harness

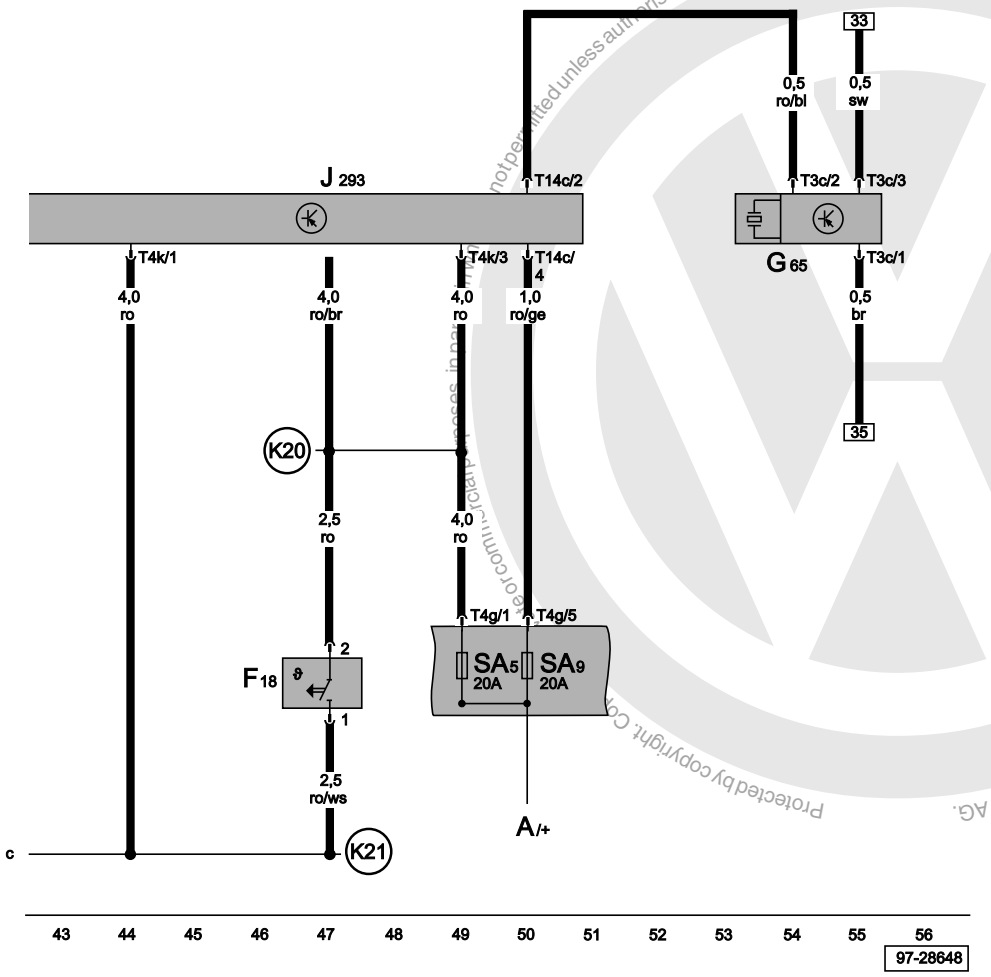

ws	=	white
sw	=	black
ro	=	red
br	=	brown
gn	=	green
bl	=	blue
gr	=	grey
li	=	purple
ge	=	yellow
or	=	orange
rs	=	pink

Protected by copyright. Copying not permitted unless authorised by Volkswagen AG. Volkswagen AG does not guarantee or accept any liability with respect to the correctness of information in this document. Copyright by Volkswagen AG.

satelettronica

Preperation for telephone

From May 2000

For alternatives to relay and fuse positions as well as multi-pin connector wiring - see "Fitting locations" section.

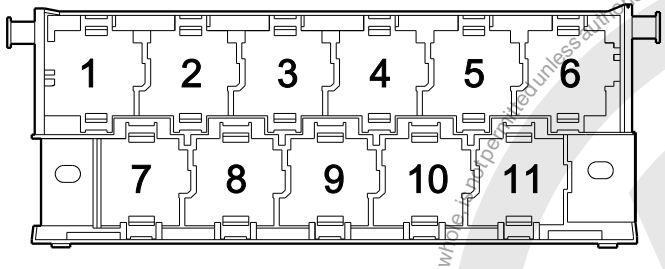

97-22850

Fuse colours

30 A - green
25 A - white
20 A - yellow
15 A - blue
10 A - red
7.5 A - brown
5 A - beige
3 A - lilac

Protected by copyright. Copying for private or commercial purposes, in part or in whole is not permitted unless authorised by Volkswagen AG. Volkswagen AG does not guarantee or accept any liability with respect to the correctness of information in this document. Copyright by Volkswagen AG.

satelettronica

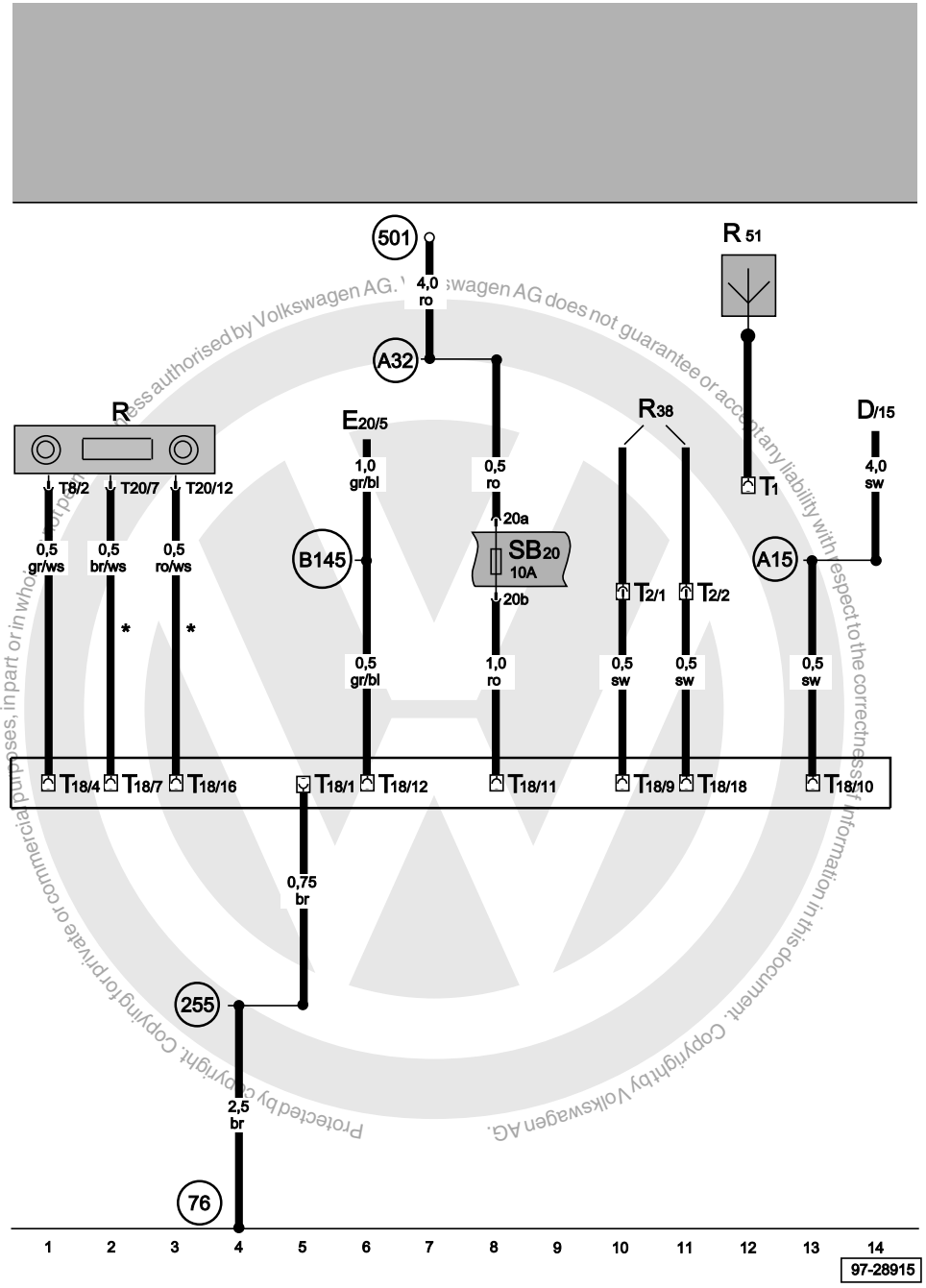

Radio, preperation for telephone

D	Ignition/starter switch
E20	Switches and instruments, lighting control
R	Radio
R38	Telephone microphone, near interior light (not mounted by the manufacturer)
R51	Antenna per radio/telefono
SB20	Fuse -20- in relay plate fuse box
T1	1-pin connector, VDA -HF connector, under front passenger's seat
T2	2-pin connector, for microphone for telephone, in A-pillar
T8	8-pin connector, on radio
T18	18-pin connector, VDA connector, under front passenger's seat
T20	20-pin connector, blue, on radio
76	Earth point, near selector mechanism
255	Earth connection -1-, in radio wiring harness
501	Screw connection -2- (30), on relay plate
A15	Positive (+) connection (15), in instruments wiring harness
A32	Positive (+) connection (30), in dash panel wiring harness
B145	Positive (+) connection (58b), in interior wiring harness
*	Only models with navigation

ws	=	white
sw	=	black
ro	=	red
br	=	brown
gn	=	green
bl	=	blue
gr	=	grey
li = purple
ge = yellow
or = orange
rs = pink

Protected by copyright. Copying for private or commercial purposes, in part or in whole, is not permitted unless authorised by Volkswagen AG. Volkswagen AG does not guarantee or accept any liability with respect to the correctness of information in this document. Copyright by Volkswagen AG.

satelettronica

Seat heating for leather seats

From October 1999

For alternatives to relay and fuse positions as well as multi-pin connector wiring - see "Fitting locations" section.

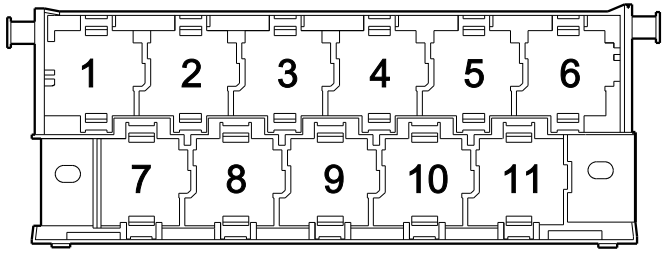

97-22850

Fuse colours

30 A - green
25 A - white
20 A - yellow
15 A - blue
10 A - red
7.5 A - brown
5 A - beige
3 A - purple

Protected by copyright. Copying for private or commercial purposes, in part or in whole, is not permitted unless authorised by Volkswagen AG. Volkswagen AG does not guarantee or accept any liability with respect to the correctness of information in this document. Copyright by Volkswagen AG.

satelettronica

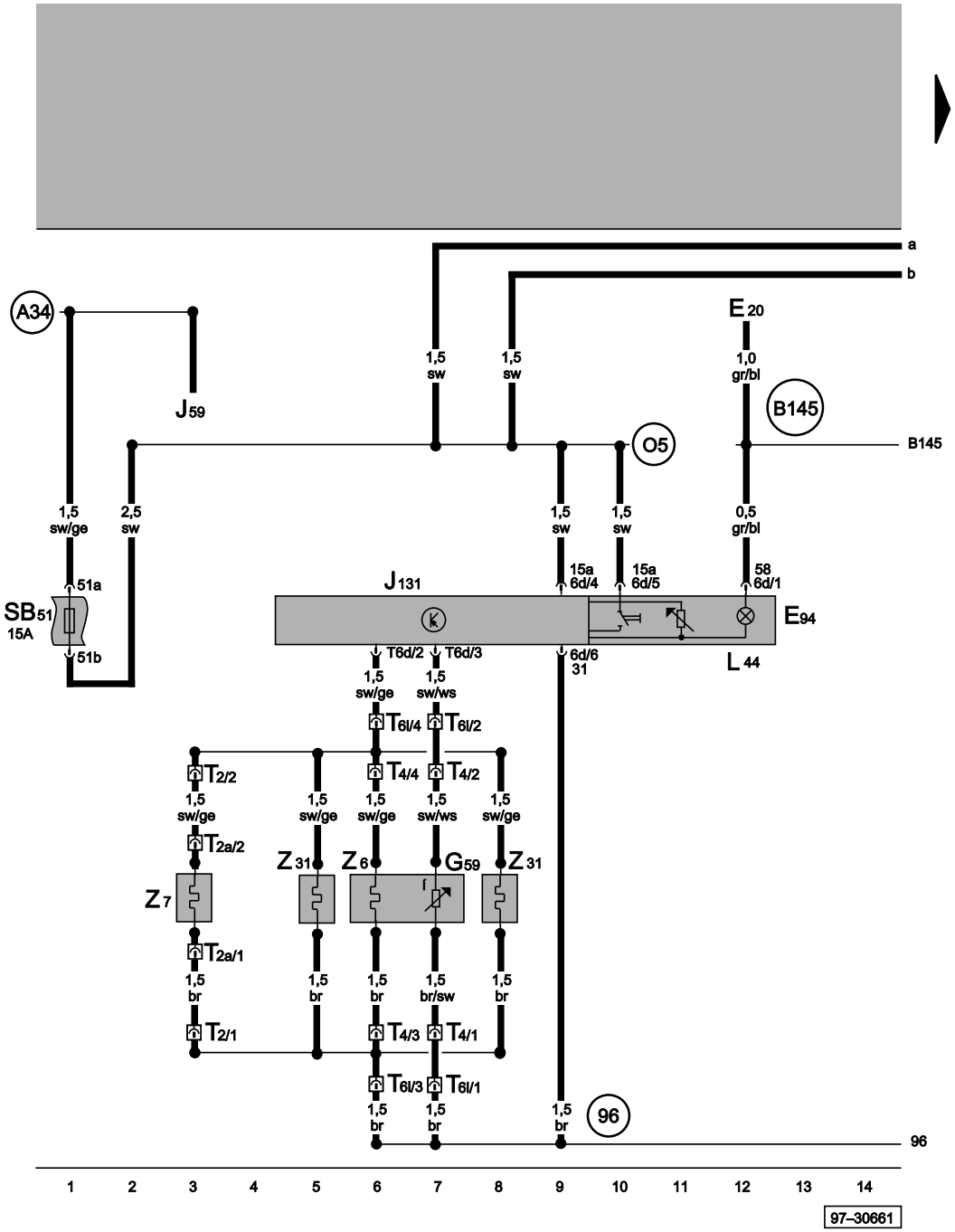

Heated driver's seat control unit, heated driver's seat adjuster, heated driver's seat, heated driver's seat backrest

E20	Switches and instruments, lighting control
E94	Heated driver's seat adjuster
G59	Driver's seat temperature sensor
J59	X contact relief relay
J131	Heated driver's seat control unit
L44	Seat heating switch light bulb
SB51	Fuse -51- in fuse box/relay plate
T2a	2-pin connector
T2	2-pin connector, under driver's seat
T6d	6-pin connector, black
T6l	6-pin connector, black, under driver's seat
Z6	Heated driver's seat
Z7	Heated driver's seat backrest
Z31	Seat lateral support heater, driver's seat
96	Earth connection -1-, in seat heating wiring harness
B145	Positive (+) connection (58b), in interior wiring harness
A34	Connection (75x), in dash panel wiring harness
O5	Positive (+) connection -1- (15a), in seat heating wiring harness

ws	=	white
sw	=	black
ro	=	red
br	=	brown
gn	=	green
bl	=	blue
gr	=	grey
li	=	purple
ge	=	yellow
or	=	orange
rs	=	pink

Protected by copyright. Copying for private or commercial purposes, in part or in whole, is not permitted unless authorised by Volkswagen AG. Volkswagen AG does not guarantee or accept any liability with respect to the correctness of information in this document. Copyright by Volkswagen AG.
satelettronica

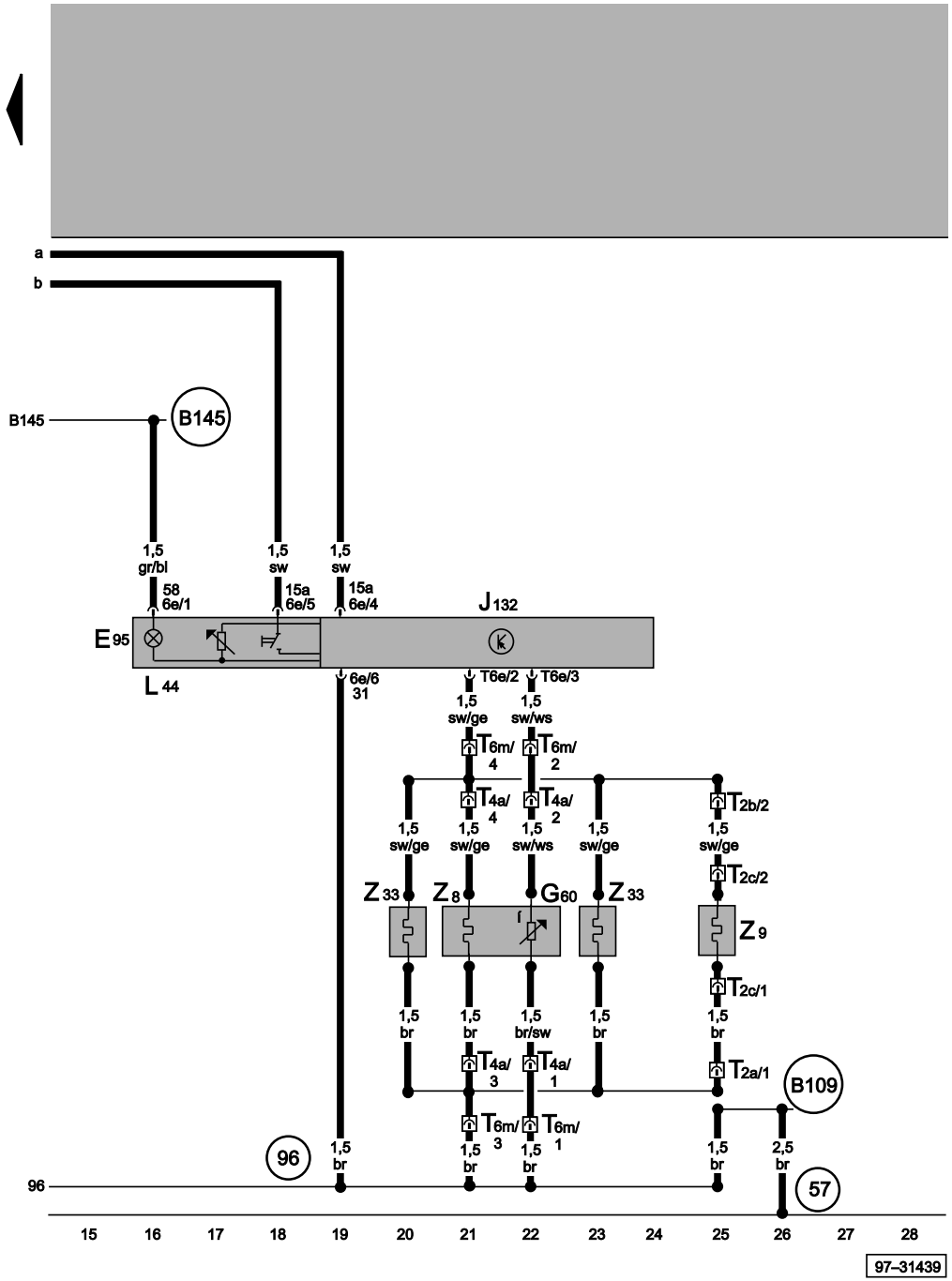

Heated passenger's seat control unit, heated front passenger's seat adjuster, heated front passenger's seat, heated front passenger's seat backrest

E95	Heated front passenger's seat adjuster
G60	Front passenger's seat temperature sensor
J132	Heated front passenger's seat control unit
L44	Seat heating switch light bulb
T2b	2-pin connector, under front passenger's seat
T2c	2-pin connector, under front passenger's seat
T4a	4-pin connector, under front passenger seat
T6e	6-pin connector, black
T6m	6-pin connector, black, under front passenger's seat
Z8	Heated front passenger's seat
Z9	Heated front passenger's seat backrest
Z33	Seat lateral support heater, front passenger's seat
57	Earth point, left rear pillar
96	Earth connection -1-, in seat heating wiring harness
B109	Earth connection, in interior wiring harness, rear left
B145	Positive (+) connection (58b), in dash panel wiring harness

ws	=	white
sw	=	black
ro	=	red
br	=	brown
gn	=	green
bl	=	blue
gr	=	grey
li	=	purple
ge	=	yellow
or	=	orange
rs	=	pink

Protected by copyright. Copying for private or commercial purposes, in part or in whole, is not permitted unless authorised by Volkswagen AG. Volkswagen AG does not guarantee or accept any liability with respect to the correctness of information in this document. Copyright by Volkswagen AG.
satelettronica

Automatic gearbox

⇒ **1.4 l/55 kW - 4CV, engine codes AHW**

From June 1999

For alternatives to relay and fuse positions as well as multi-pin connector wiring - see "Fitting locations" section.

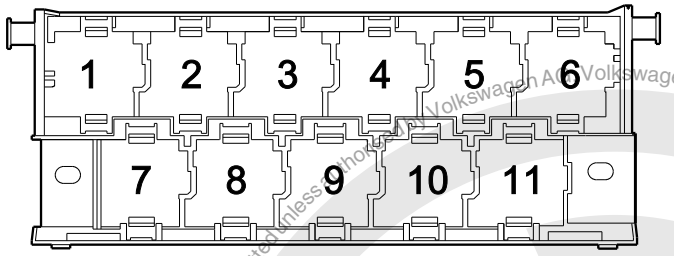

97-22850

Fuse colours

30 A - green
25 A - white
20 A - yellow
15 A - blue
10 A - red
7.5 A - brown
5 A - beige
3 A - purple

Protected by copyright. Copying for private or commercial purposes, in part or in whole, is not permitted unless authorised by Volkswagen AG. Volkswagen AG does not guarantee or accept any liability with respect to the correctness of information in this document. Copyright by Volkswagen AG.

satelettronica

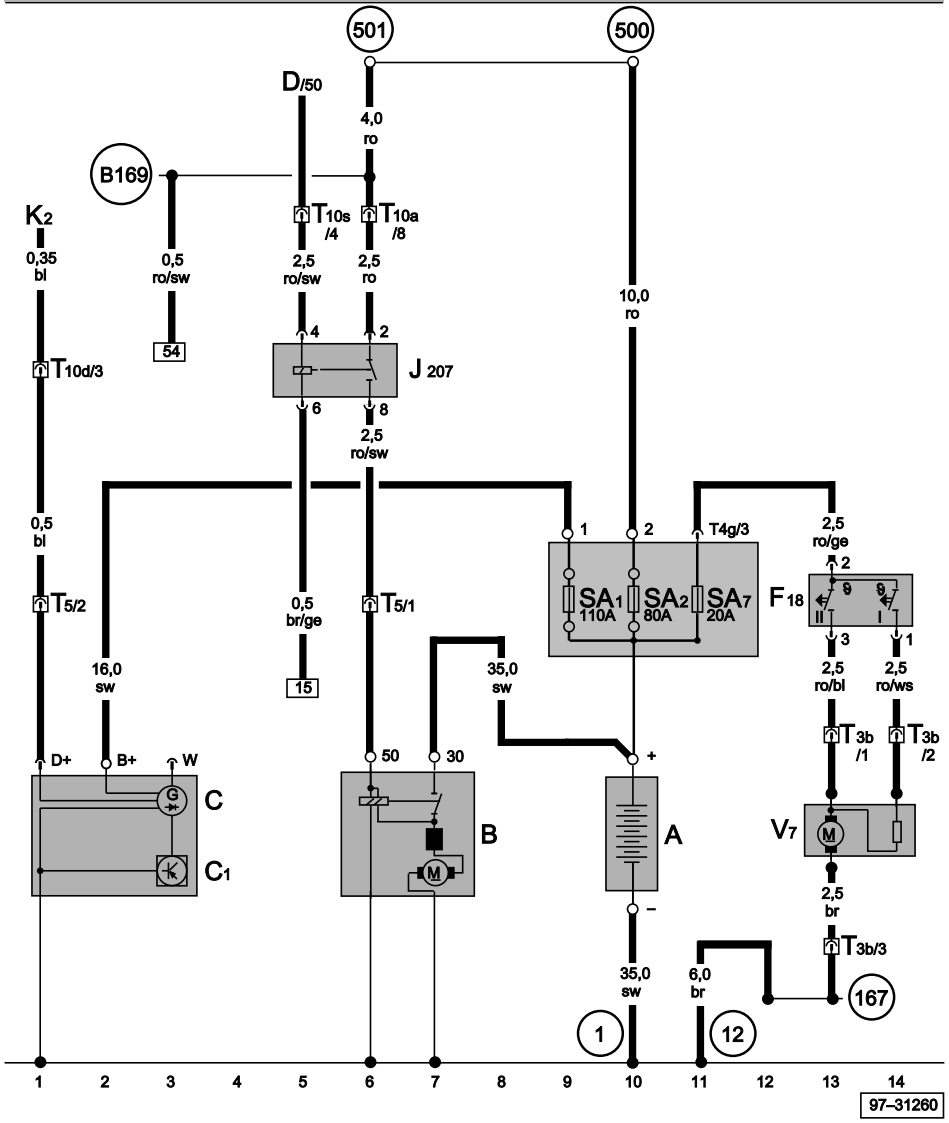

Battery, starter, alternator, radiator fan, radiator fan thermo-switch, starter inhibitor relay

A	Battery
B	Starter
C	Alternator
C1	Voltage regulator
D	Ignition/starter switch
F18	Radiator fan thermo-switch
J207	Starter inhibitor relay
K2	Alternator warning lamp
SA1	Fuse -1- (30), in fuse box/battery
SA2	Fuse -2- (30), in fuse box/battery
SA2	Fuse -7- (30), in fuse box/battery
T3b	3-pin connector, black
T4g	4-pin connector
T5	5-pin connector
T10a	10-pin connector, green, connector point under relay carrier
T10d	10-pin connector, red, connector point under relay carrier
T10s	10-pin connector, light green, connector point under relay carrier
V7	Radiator fan
1	Earth strap, battery - body
12	Earth point, in engine compartment, left
167	Earth point -4-, in engine compartment wiring harness
500	Screw connection -1- (30), on relay plate
501	Screw connection -2- (30), on relay plate
B169	Positive (+) connection -1- (30), in interior wiring harness

ws	=	white
sw	=	black
ro	=	red
br	=	brown
gn	=	green
bl	=	blue
gr	=	grey
li = purple
ge	=	yellow
or	=	orange
rs	=	pink

Protected by copyright. Copying for private or commercial purposes, in part or in whole, is not permitted unless authorised. Copyright by Volkswagen AG. Volkswagen AG does not guarantee or accept any liability with respect to the correctness of information in this document.
satelettronica

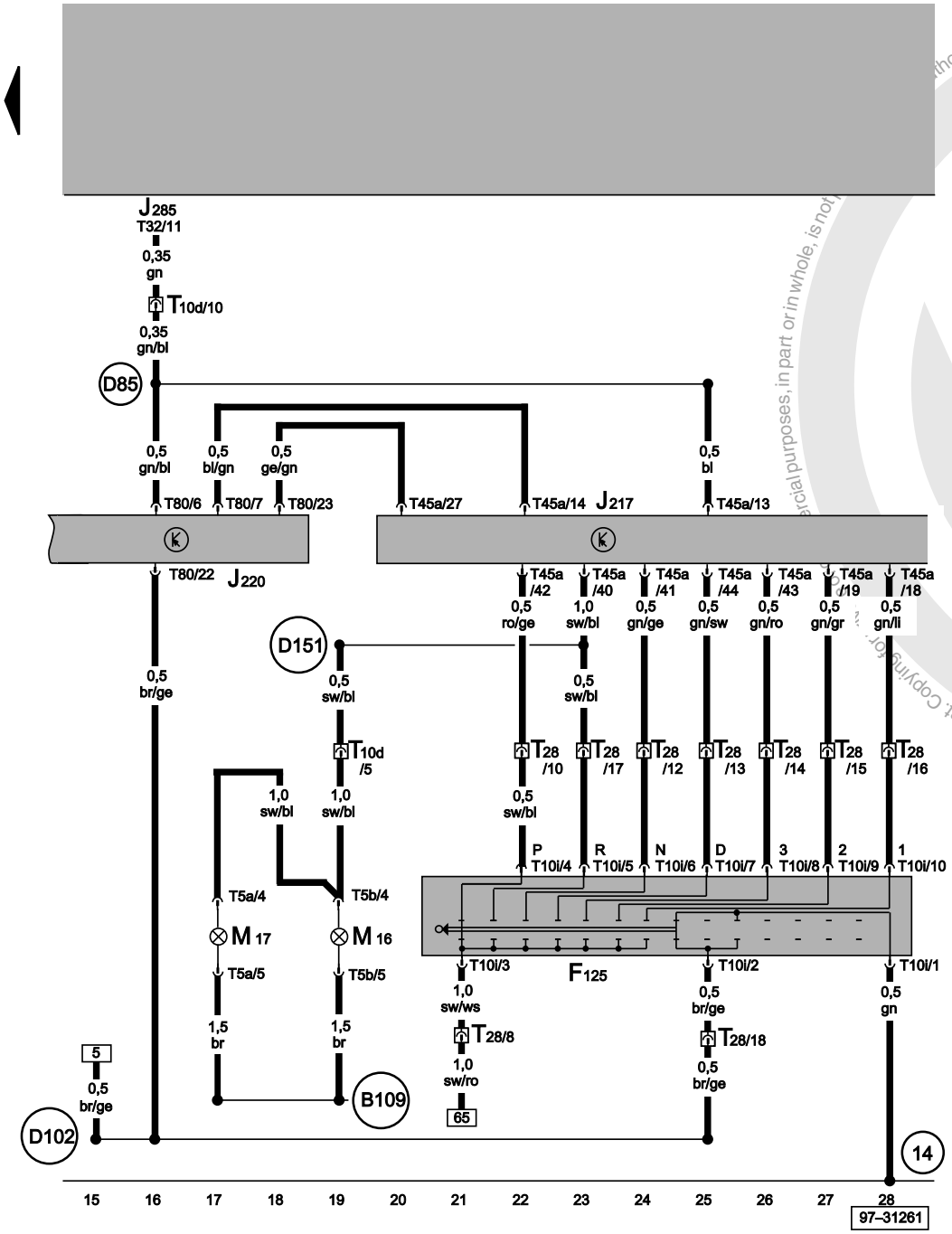

Motronic control unit, automatic gearbox control unit, multi-function switch

F125	Multi-function switch
J217	Automatic gearbox control unit
J220	Motronic control unit
J285	Control unit with display in dash panel insert
M16	Reversing light bulb, left
M17	Reversing light bulb, right
T10d	10-pin connector, red, connector point under relay carrier
T10i	10-pin connector, black, on multi-function switch
T28	28-pin connector, black, on gearbox
T32	32-pin connector, black
T45a	45-pin connector, black
T80	80-pin connector, black
14	Earth point, on gearbox
B109	Earth connection, in interior wiring harness, rear left
D85	Connection (automatic gearbox warning lamp), in engine compartment wiring harness
D102	Connection -2-, in engine compartment wiring harness
D151	Connection (RF), in engine compartment wiring harness

ws	=	white
sw	=	black
ro	=	red
br	=	brown
gn	=	green
bl	=	blue
gr	=	grey
li	=	purple
ge	=	yellow
or	=	orange
rs	=	pink

Protected by copyright. Copyright by Volkswagen AG.
Copyright by Volkswagen AG. Volkswagen AG does not accept any liability with respect to the correctness of information in this document. Copyright by Volkswagen AG. Protected by copyright. Copying for commercial purposes, in part or in whole, is not permitted. Reproduction authorised by Volkswagen AG.
satelettronica

Automatic gearbox control unit, solenoid valves, solenoid valve series resistance, vehicle speed sender

G68	Vehicle speed sender
G93	Gearbox oil temperature sender
J217	Automatic gearbox control unit
N88	Solenoid valve 1
N89	Solenoid valve 2
N90	Solenoid valve 3
N91	Solenoid valve 4
N93	Solenoid valve 6
N207	Solenoid valve series resistance (automatic gearbox)
T2m	2-pin connector, black
T8g	8-pin connector, black, on gearbox
T28	28-pin connector, black, on gearbox
T45a	45-pin connector, black

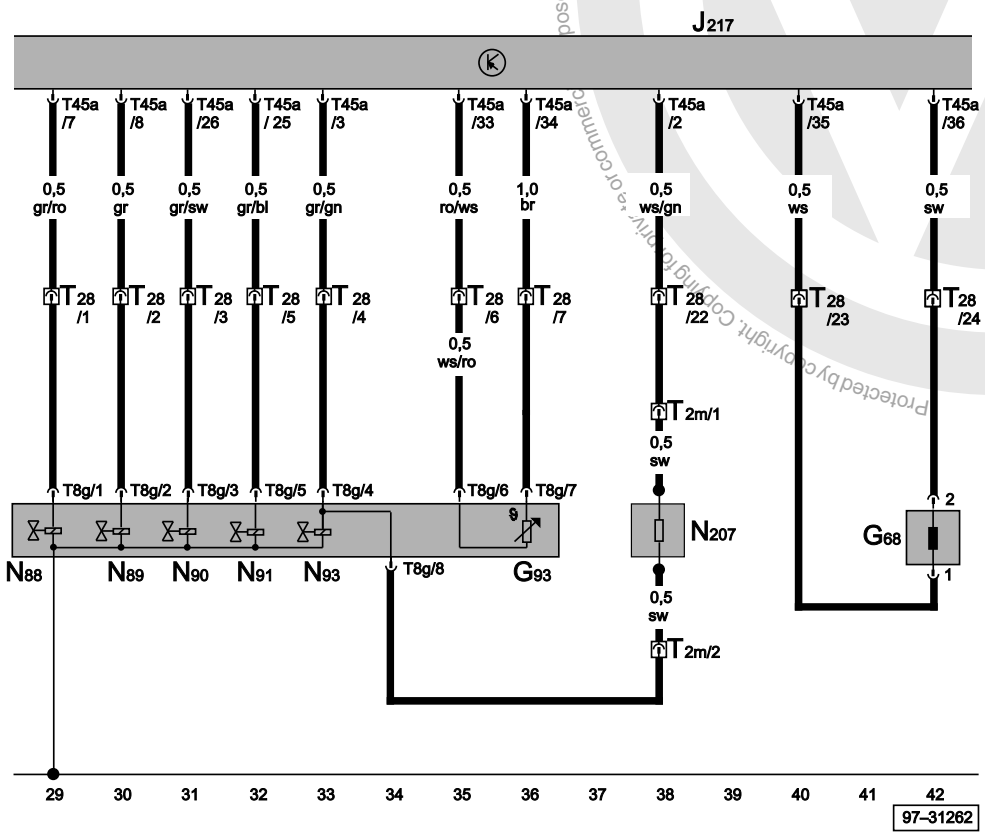

ws	=	white
sw	=	black
ro	=	red
br	=	brown
gn	=	green
bl	=	blue
gr	=	grey
li	=	purple
ge	=	yellow
or	=	orange
rs	=	pink

Volkswagen AG does not guarantee or assume any liability with regard to the correctness of information in this document. Copyright by Volkswagen AG. Protected by copyright. Copying for priv. or commercial purposes, in part or in whole, is not permitted.
satelettronica

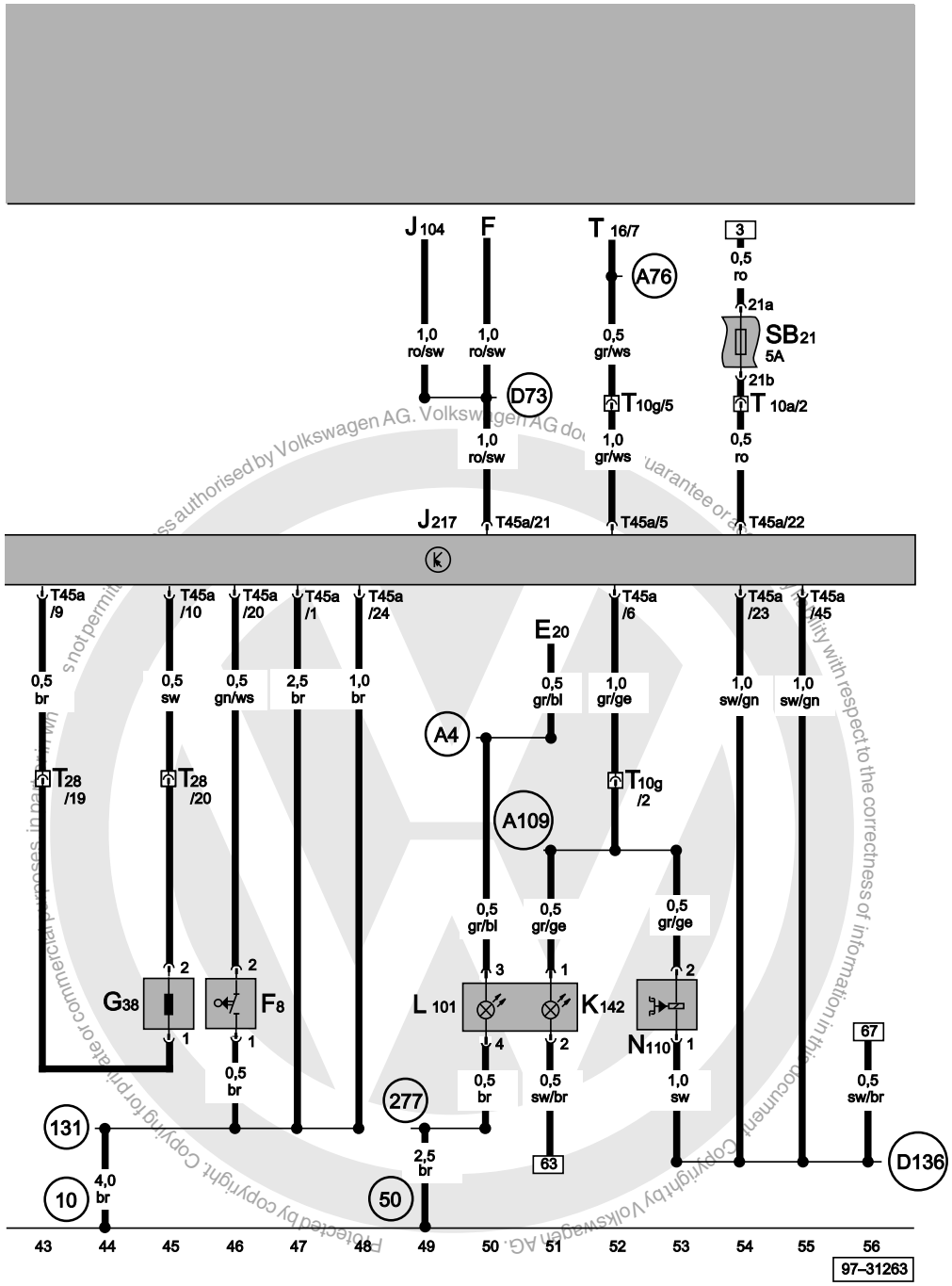

Automatic gearbox control unit, gearbox speed sender, selector lever lock solenoid valve, kick-down switch, selector lever display illumination, selector lever position P/N warning lamp

E20	Switches and instruments
F	Brake light switch
F8	Kick-down switch
G38	Gearbox speed sender
J104	ABS with EDL control unit
J217	Automatic gearbox control unit
K142	Selector lever position P/N warning lamp
L101	Selector lever display illumination
N110	Selector lever lock solenoid
SB21	Fuse -21- on fuse box
T10a	10-pin connector, green
T10g	10-pin connector, brown
T16	16-pin connector, self-diagnosis connection
T28	28-pin connector, black
T45a	45-pin connector, black
10	Earth point, in plenum chamber
50	Earth point, on left luggage compartment
131	Earth connection -2-, in engine compartment wiring harness
277	Earth connection -3-, in interior wiring harness
A4	Positive (+) connection (58b), in dash panel wiring harness
A76	Connection (diagnosis wire K), in dash panel wiring harness
A109	Connection (selector lever function display), in dash panel wiring harness
D73	Positive (+) connection (54), in engine compartment wiring harness
D136	Positive (+) connection -2- (15a), in engine compartment wiring harness

ws	=	white
sw	=	black
ro	=	red
br	=	brown
gn	=	green
bl	=	blue
gr	=	grey
li	=	purple
ge	=	yellow
or	=	orange
rs	=	pink

satelettronica

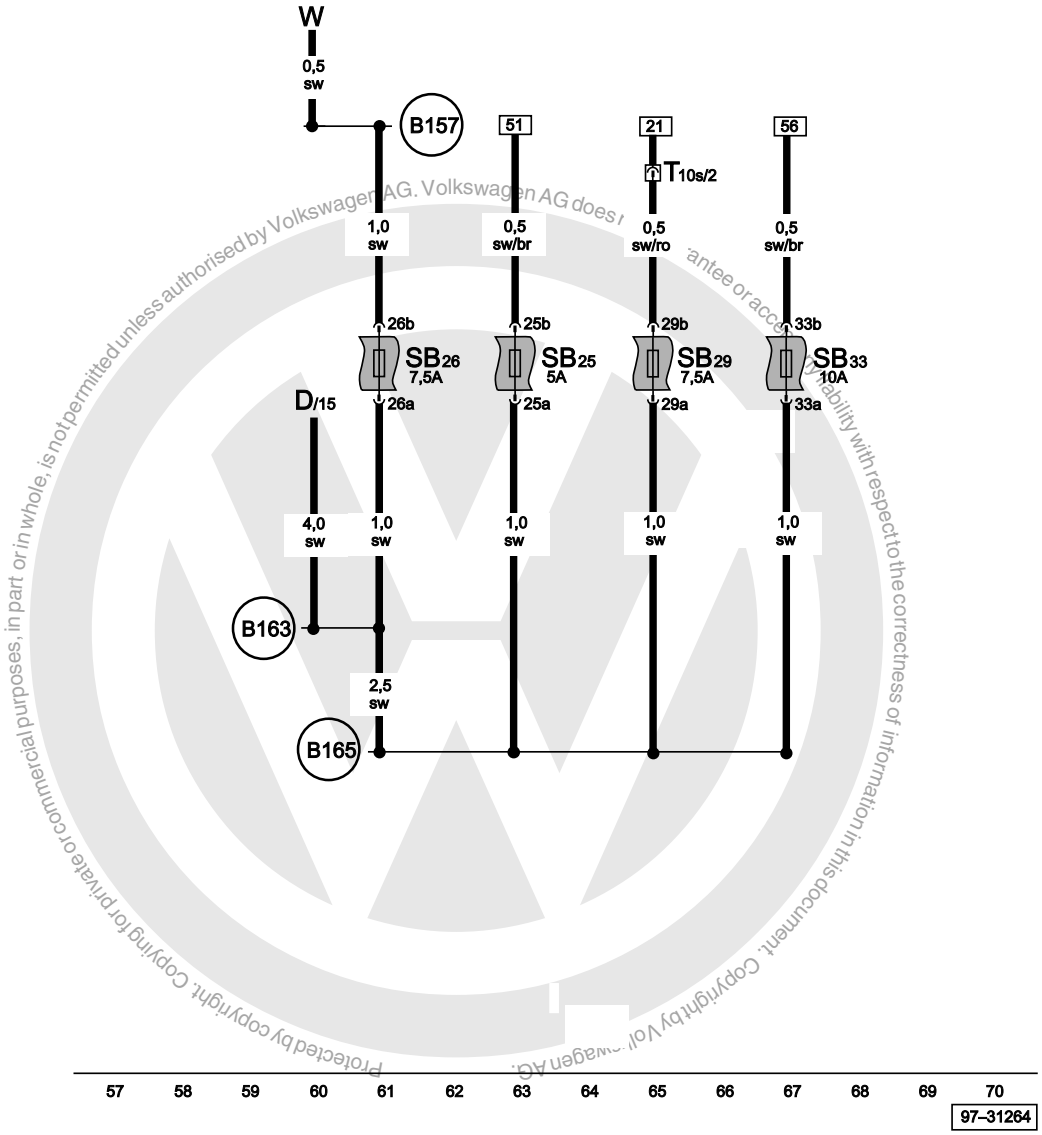

Fuses for selector lever illumination, fuse for selector lever position P/N warning lamp, fuse for selector lever lock solenoid, fuse for multi-function switch

D	Ignition/starter switch
SB25	Fuse -25- on fuse box
SB26	Fuse -26- on fuse box
SB29	Fuse -29- on fuse box
SB33	Fuse -33- on fuse box
T10s	10-pin connector, light green, near relay station
B157	Positive (+) connection -3- (15a), in interior wiring harness
B163	Positive (+) connection -1- (15), in interior wiring harness
B165	Positive (+) connection -2- (15), in interior wiring harness

ws	=	white
sw	=	black
ro	=	red
br	=	brown
gn	=	green
bl	=	blue
gr	=	grey
li	=	purple
ge	=	yellow
or	=	orange
rs	=	pink

Protected by copyright. Copying for private or commercial purposes, in part or in whole, is not permitted unless authorised by Volkswagen AG. Volkswagen AG does not guarantee or accept any liability with respect to the correctness of information in this document. Copyright by Volkswagen AG.

satelettronica

Automatic gearbox

⇒ 1.4 l/40 kW Motronic, engine codes ANX
⇒ 1.4 l Motronic/44 kW, engine codes AEX, AKV, APQ
⇒ 1.4 l/74 kW 1AV, engine codes AFH
⇒ 1.6 l/55 kW 1AV, engine codes AEE
⇒ 1.6 l/88 kW - 4CV, engine codes AJV
From June 1997

For alternatives to relay and fuse positions as well as multi-pin connector wiring - see "Fitting locations" section.

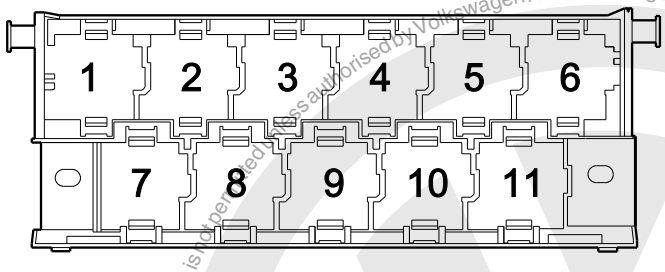

97-22850

Fuse colours

30 A - green
25 A - white
20 A - yellow
15 A - blue
10 A - red
7.5 A - brown
5 A - beige
3 A - purple

Protected by copyright. Copying for private or commercial purposes, in part or in whole, is not permitted unless authorised by Volkswagen AG. Volkswagen AG does not guarantee or accept any liability with respect to the correctness of information in this document. Copyright by Volkswagen AG.

satelettronica

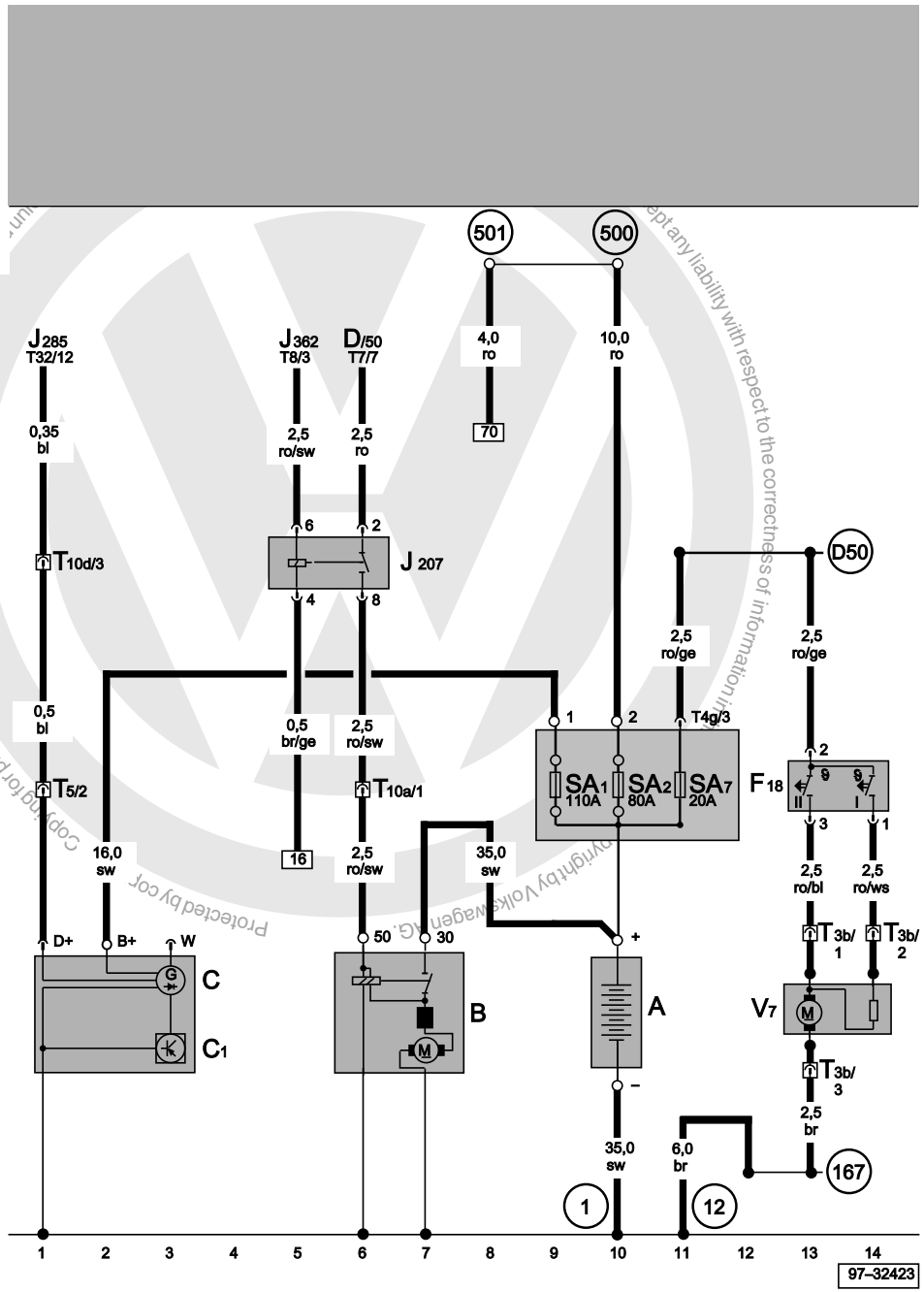

Battery, starter, alternator, radiator fan, radiator fan thermo-switch, starter inhibitor relay

A	Battery
B	Starter
C	Alternator
C1	Voltage regulator
D	Ignition/starter switch
F18	Radiator fan thermo-switch
J207	Starter inhibitor relay
J285	Control unit with display in dash panel insert
J362	Immobilizer control unit
SA1	Fuse -1- (30), in fuse box/battery
SA2	Fuse -2- (30), in fuse box/battery
SA2	Fuse -7- (30), in fuse box/battery
T3b	3-pin connector, black
T4g	4-pin connector
T5	5-pin connector
T8	8-pin connector
T10a	10-pin connector, green, connector point under relay carrier
T10d	10-pin connector, red, connector point under relay carrier
V7	Radiator fan
1	Earth strap, battery - body
12	Earth point, in engine compartment, left
167	Earth point -4-, in engine compartment wiring harness
500	Screw connection -1- (30), on relay plate
501	Screw connection -2- (30), on relay plate
D50	Positive (+) connection (30), in engine compartment wiring harness

ws	=	white
sw	=	black
ro	=	red
br	=	brown
gn	=	green
bl	=	blue
gr	=	grey
li	=	purple
ge	=	yellow
or	=	orange
rs	=	pink

Copying for private or commercial purposes, in part or in whole, is not per. Protected by copyright by Volkswagen AG. We accept any liability with respect to the correctness of information in

satelettronica

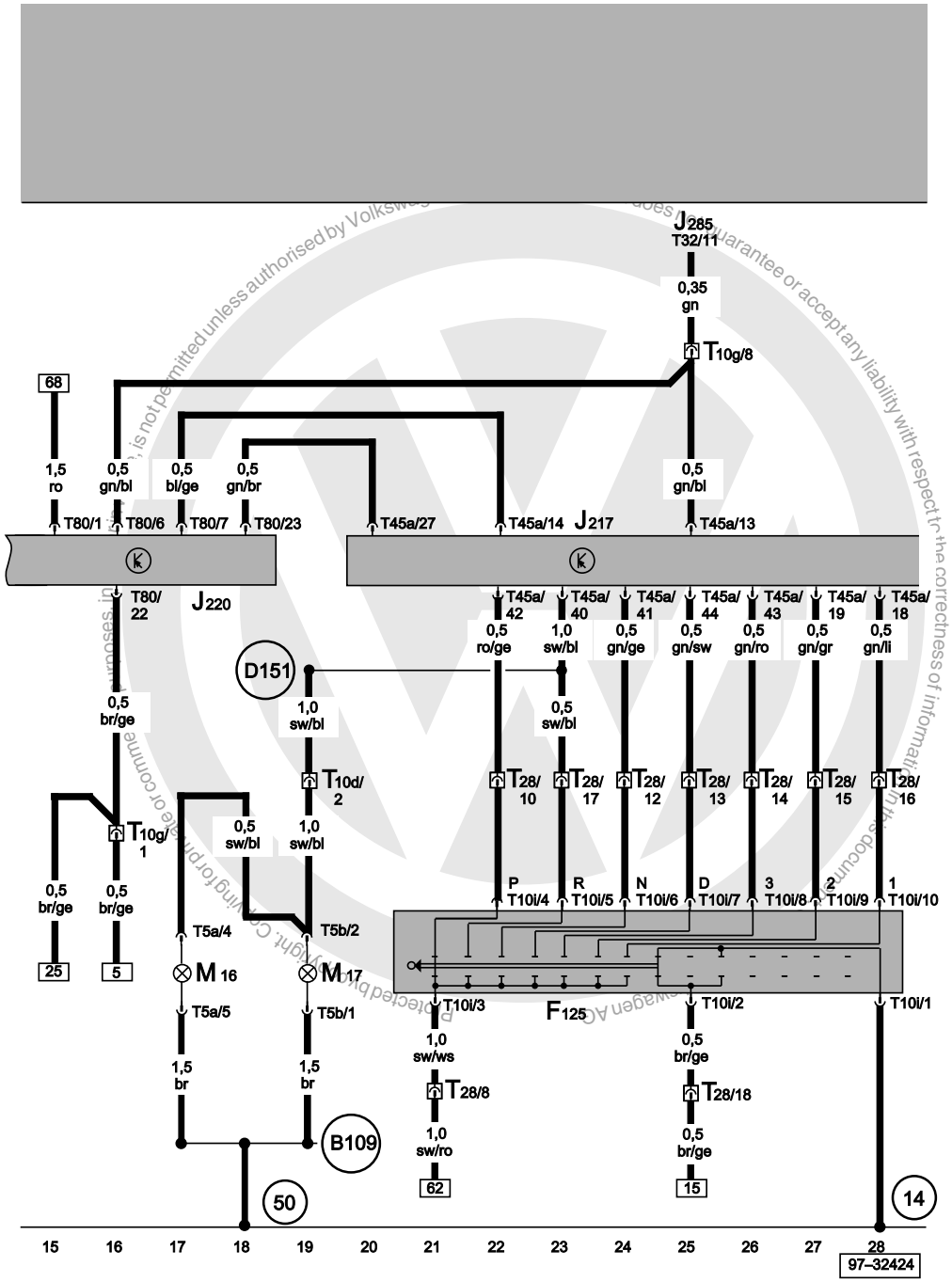

Motronic control unit, automatic gearbox control unit, multi-function switch, reversing light bulb, left, reversing light bulb, right

F125	Multi-function switch
J217	Automatic gearbox control unit
J220	Motronic control unit
J285	Control unit with display in dash panel insert
M16	Reversing light bulb, left
M17	Reversing light bulb, right
T5a	5-pin connector
T5b	5-pin connector
T10d	10-pin connector, red, connector point under relay carrier
T10g	10-pin connector, brown
T10i	10-pin connector, black
T28	28-pin connector, black, on gearbox
T32	32-pin connector, black
T45a	45-pin connector, black
T80	80-pin connector, black
14	Earth point, on gearbox
50	Earth point, luggage compartment, left
B109	Earth connection, in interior wiring harness, rear left
D151	Connection (RF), in engine compartment wiring harness

ws	=	white
sw	=	black
ro	=	red
br	=	brown
gn	=	green
bl	=	blue
gr	=	grey
li	=	purple
ge	=	yellow
or	=	orange
rs	=	pink

satelettronica

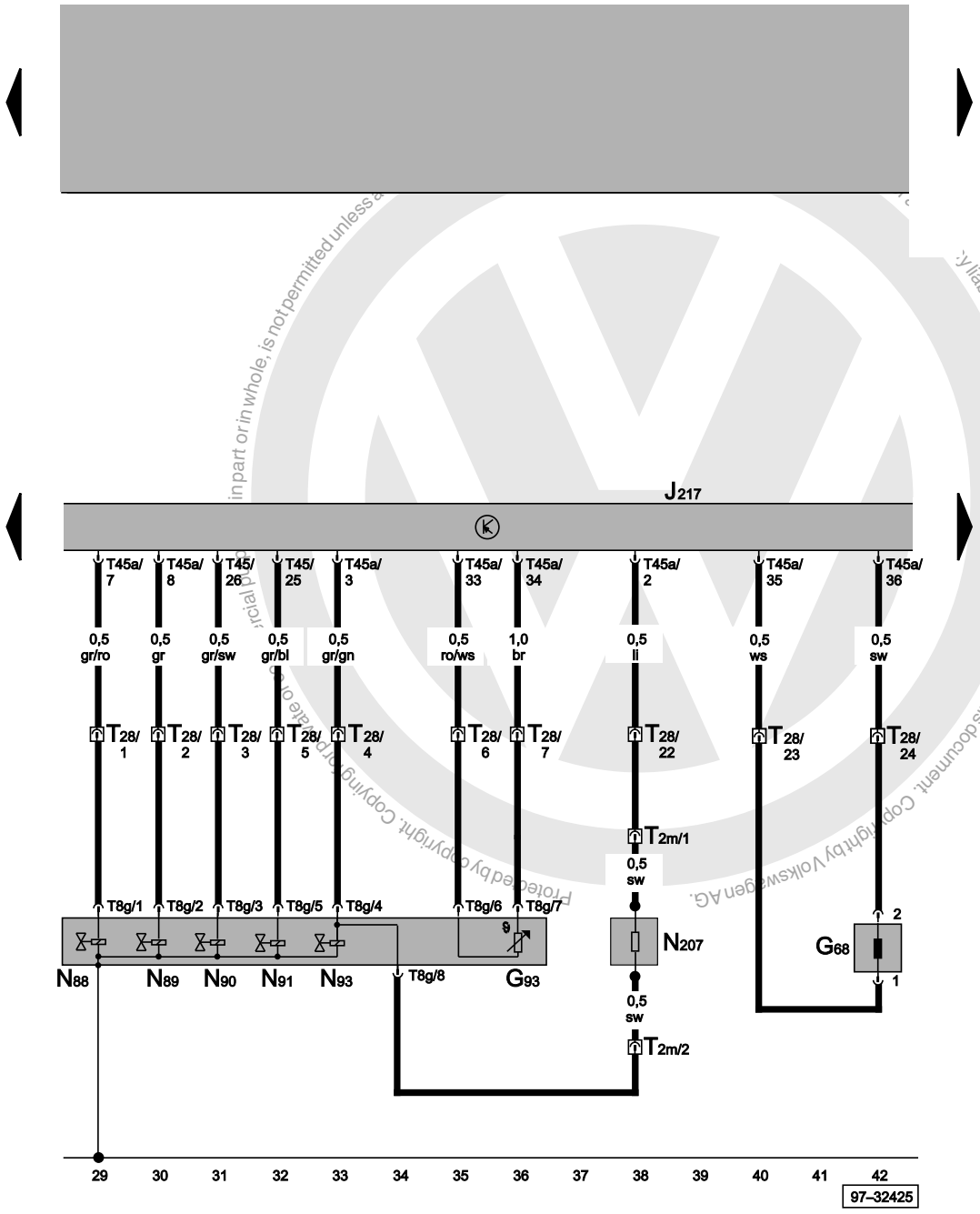

Automatic gearbox control unit, solenoid valves, solenoid valve series resistance, vehicle speed sender, gearbox oil temperature sender

G68	Vehicle speed sender
G93	Gearbox oil temperature sender
J217	Automatic gearbox control unit
N88	Solenoid valve 1
N89	Solenoid valve 2
N90	Solenoid valve 3
N91	Solenoid valve 4
N93	Solenoid valve 6
N207	Solenoid valve series resistance (automatic gearbox)
T2m	2-pin connector, black
T8g	8-pin connector, black, on gearbox
T28	28-pin connector, black, on gearbox
T45a	45-pin connector, black

ws	=	white
sw	=	black
ro	=	red
br	=	brown
gn	=	green
bl	=	blue
gr	=	grey
li	=	purple
ge	=	yellow
or	=	orange
rs	=	pink

satelettronica

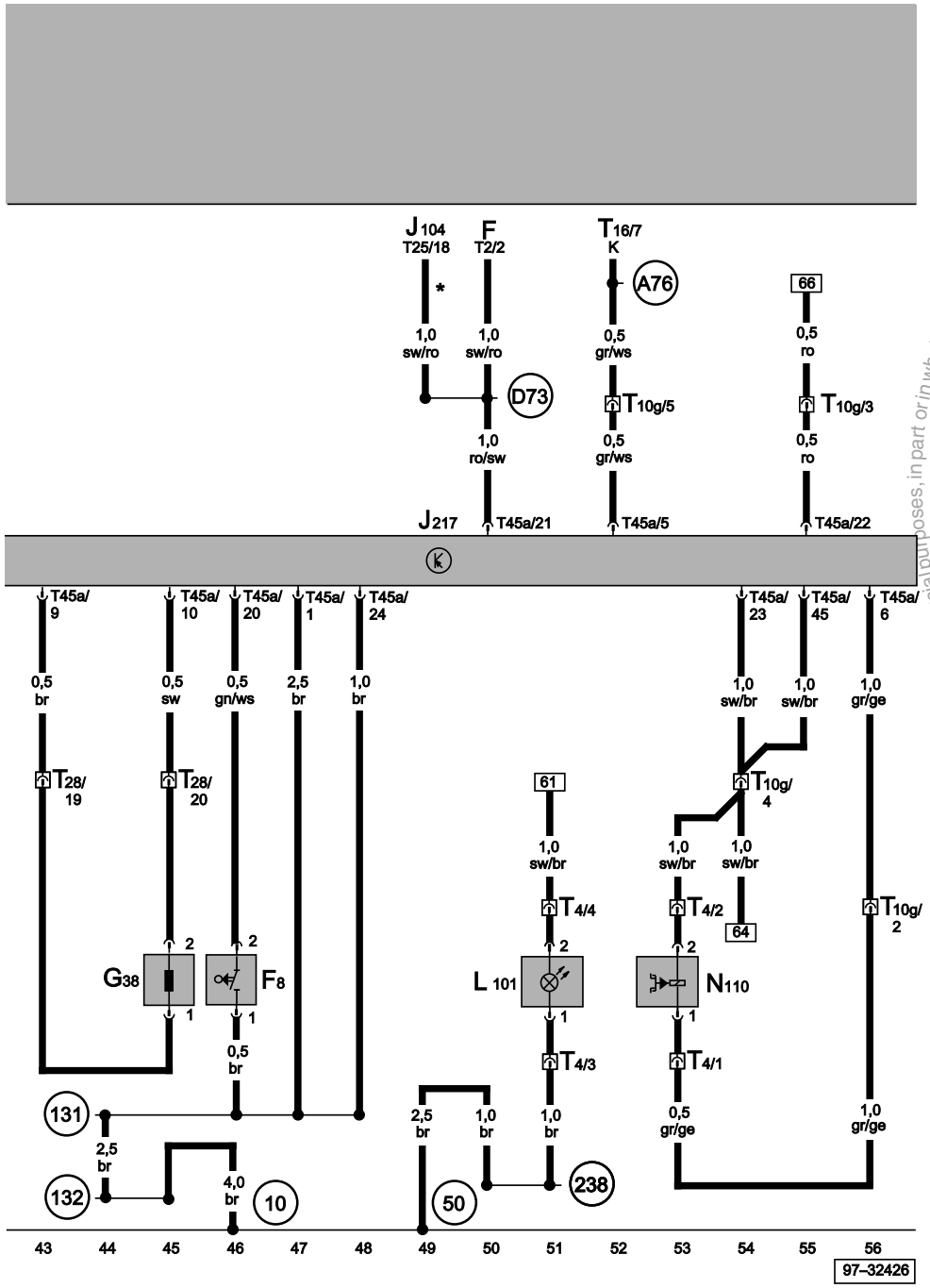

Automatic gearbox control unit, gearbox speed sender, selector lever lock solenoid valve, kick-down switch, selector lever display illumination

F	Brake light switch
F8	Kick-down switch
G38	Gearbox speed sender
J104	ABS with EDL control unit
J217	Automatic gearbox control unit
L101	Selector lever display illumination
N110	Selector lever lock solenoid
T4	4-pin connector
T10g	10-pin connector, brown
T16	16-pin connector, self-diagnosis connection
T28	28-pin connector, black
T45a	45-pin connector, black
10	Earth point, in plenum chamber
50	Earth point, on left luggage compartment
131	Earth connection -2-, in engine compartment wiring harness
132	Earth connection -3-, in engine compartment wiring harness
238	Earth connection -1-, in interior wiring harness
A76	Connection (diagnosis wire K), in dash panel wiring harness
D73	Positive (+) connection (54), in engine compartment wiring harness
*	Only models with ABS

ws	=	white
sw	=	black
ro	=	red
br	=	brown
gn	=	green
bl	=	blue
gr	=	grey
li	=	purple
ge	=	yellow
or	=	orange
rs	=	pink

Protected by copyright. Copying for private or commercial purposes, in part or in whole, is not permitted unless authorised by Volkswagen AG. Volkswagen AG does not guarantee or accept any liability with respect to the correctness of information in this document. Copyright by Volkswagen AG.

satelettronica

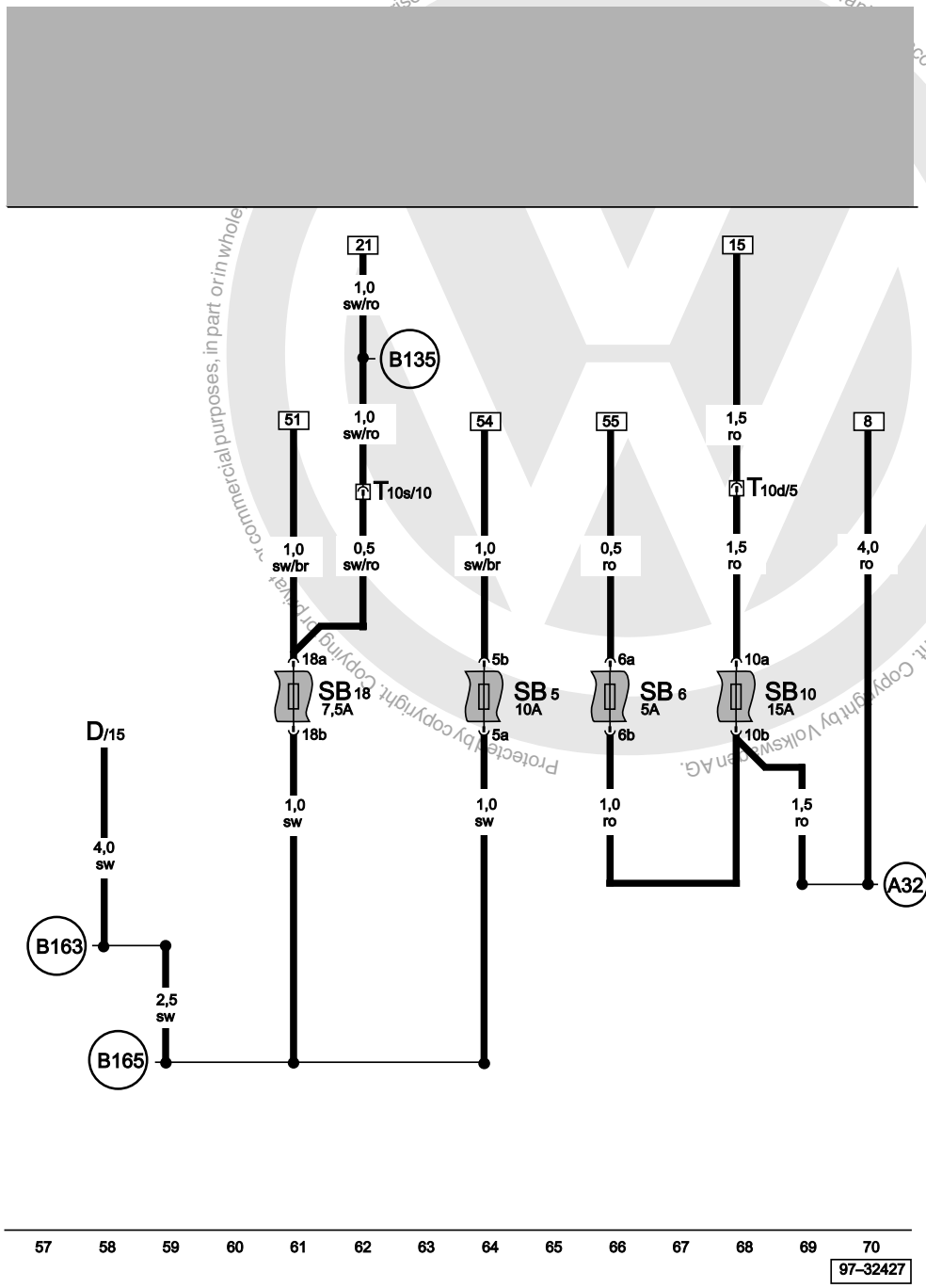

Fuses for selector lever illumination, fuse for selector lever lock solenoid, fuse for multi-function switch, engine control unit fuse

D	Ignition/starter switch
SB5	Fuse -5- on fuse box, for selector lever lock solenoid
SB6	Fuse -6- on fuse box, for automatic gearbox control unit
SB10	Fuse -10- on fuse box, for automatic gearbox control unit
SB10	Fuse -10- on fuse box, for selector lever display illumination
T10d	10-pin connector, red
T10s	10-pin connector, light green
A32	Positive (+) connection (30), in dash panel wiring harness
B135	Connection -1- (15a), in interior wiring harness
B163	Positive (+) connection -1- (15), in interior wiring harness
B165	Positive (+) connection -2- (15), in interior wiring harness

ws	=	white
sw	=	black
ro	=	red
br	=	brown
gn	=	green
bl	=	blue
gr	=	grey
li	=	purple
ge	=	yellow
or	=	orange
rs	=	pink

satelettronica

Daytime driving lights

From October 2000

For alternatives to relay and fuse positions as well as multi-pin connector wiring - see "Fitting locations" section.

Relay locations on relay plate:

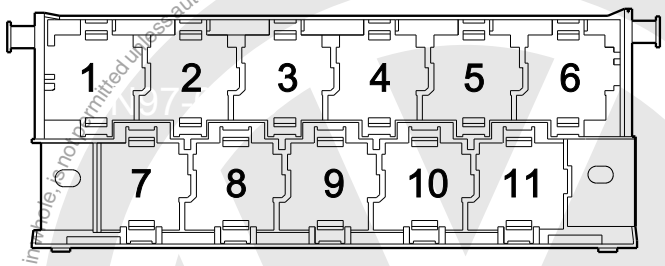

97-22850

7 X contact relief relay (100)

Note!

- *The number in brackets behind the part designation denotes the control number on the housing.*

Fuse colours

30 A - green
25 A - white
20 A - yellow
15 A - blue
10 A - red
7.5 A - brown
5 A - beige
3 A - purple

Protected by copyright. Copying in part or in whole, is not permitted unless authorised by Volkswagen AG. Volkswagen AG does not guarantee or accept any liability with respect to the correctness of information in this document. Copyright by Volkswagen AG.

satelettronica

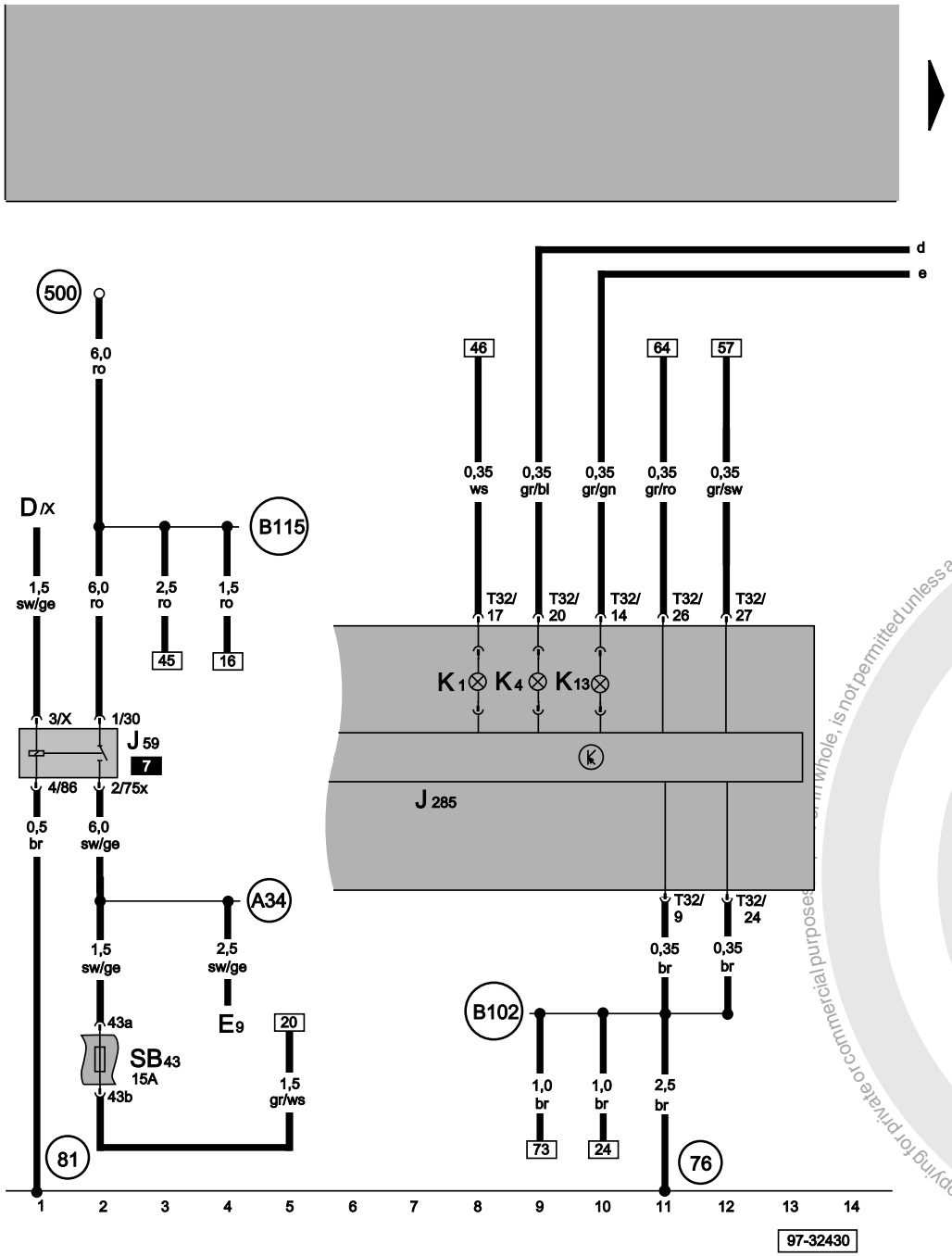

Dash panel insert, main beam warning lamp, X contact relief relay, side light warning lamp, rear fog light warning lamp

D	Ignition/starter switch
E9	Fresh air blower switch
J59	X contact relief relay
J285	Control unit with display in dash panel insert
K1	Main beam warning lamp
K4	Side light warning lamp
K13	Rear fog light warning lamp
SB43	Fuse -43- on fuse box
T32	32-pin connector, blue
76	Earth point, near selector mechanism
81	Earth connection -1-, in dash panel wiring harness
500	Screw connection -1- (30), on relay plate
A34	Connection (75x), in dash panel wiring harness
B102	Earth connection, in interior wiring harness, front left
B115	Positive (+) connection (30, central electrics), in interior wiring harness

ws	=	white
sw	=	black
ro	=	red
br	=	brown
gn	=	green
bl	=	blue
gr	=	grey
li	=	purple
ge	=	yellow
or	=	orange
rs	=	pink

Protected by copyright. Copying for private or commercial purposes, in whole, is not permitted unless authorised by Volkswagen AG. Volkswagen AG does not guarantee or accept any liability with respect to the correctness of information in this document. Copyright by Volkswagen AG.
satelettronica

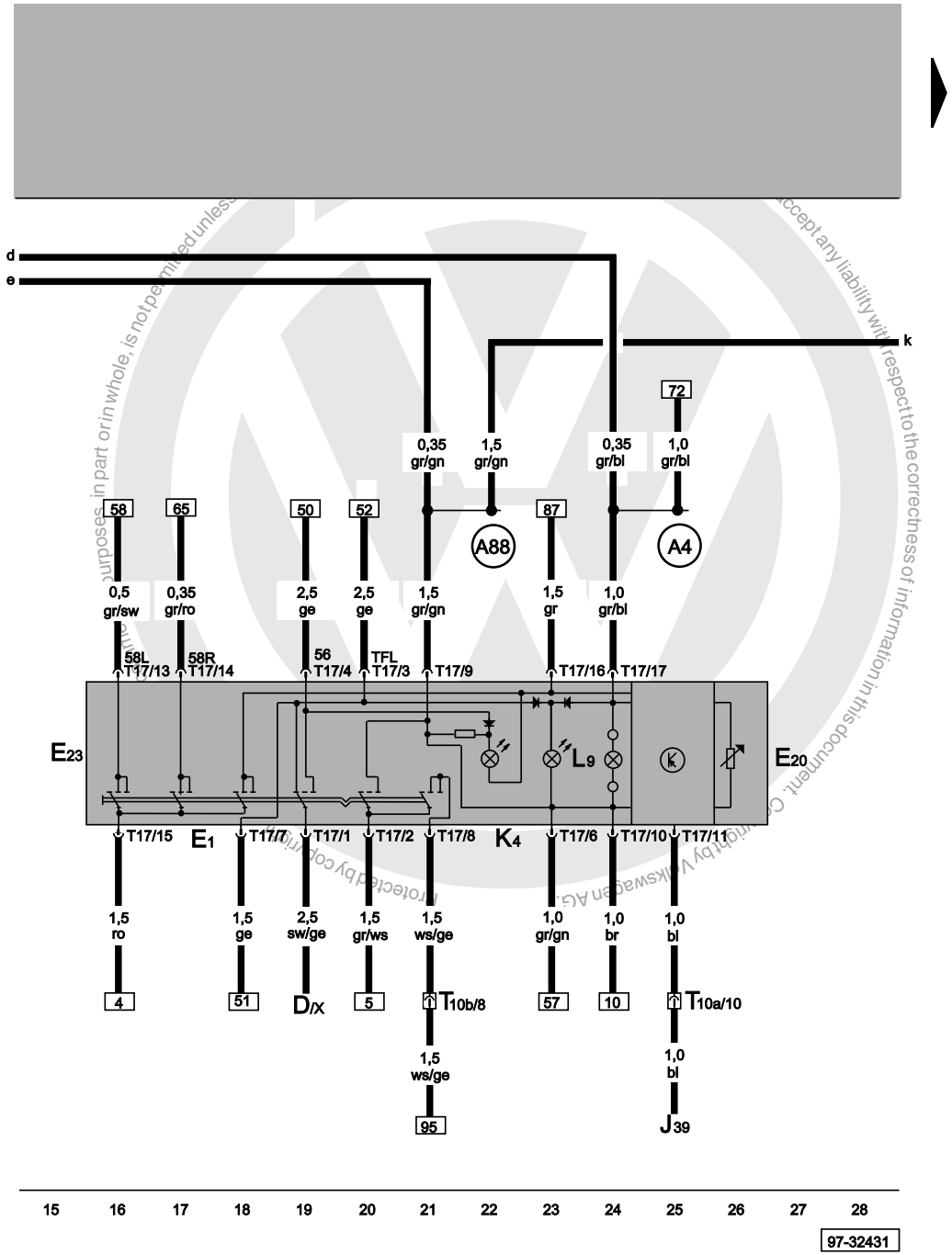

Lighting switch, switches and instruments - lighting control, front and rear fog light switch, lighting switch light bulb

D	Ignition/starter switch
E1	Lighting switch
E20	Switches and instruments, lighting control
E23	Front and rear fog light switch
J39	Headlight washer system relay
K4	Side light warning lamp
L9	Lighting switch light bulb
T10a	10-pin connector, green, near relay station
T10b	10-pin connector, black, near relay station
T17	17-pin connector, , black
A4	Positive (+) connection (58b), in dash panel wiring harness
A88	Connection (rear fog light), in dash panel wiring harness

ws	=	white
sw	=	black
ro	=	red
br	=	brown
gn	=	green
bl	=	blue
gr	=	grey
li = purple
ge = yellow
or = orange
rs = pink

satelettronica

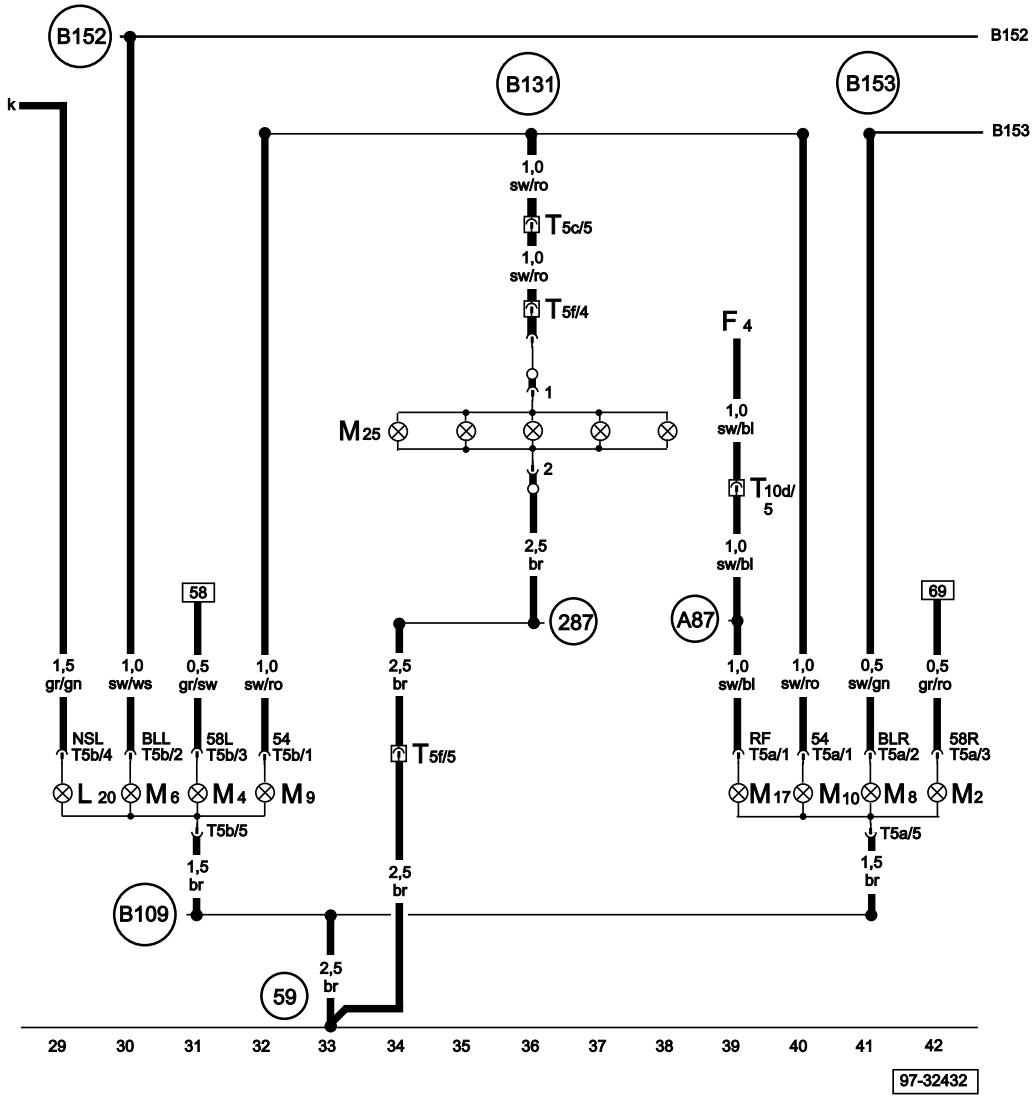

Tail lights, brake lights, rear fog light, reversing light, rear turn signals

F4	Reversing light switch
L20	Rear fog light bulb
M2	Tail light bulb, right
M4	Tail light bulb, left
M6	Turn signal bulb, rear left
M8	Turn signal bulb, rear right
M9	Brake light bulb, left
M10	Brake light bulb, right
M17	Reversing light bulb, right
M25	High level brake light bulb
T5a	5-pin connector, black
T5b	5-pin connector, black
T5c	5-pin connector, black, in rear lid prewiring wiring harness
T5f	5-pin connector, black, in tailgate/boot lid
T10d	10-pin connector, red, near relay station
59	Earth point, near left tail light
287	Earth connection, in rear lid prewiring wiring harness
A87	Connection (RL), in dash panel wiring harness
B109	Earth connection, in interior wiring harness, rear left
B131	Connection (54), in interior wiring harness
B152	Connection (BL (turn signal, left)), in interior wiring harness
B153	Connection (BR (turn signal, right)), in interior wiring harness

ws	=	white
sw	=	black
ro	=	red
br	=	brown
gn	=	green
bl	=	blue
gr	=	grey
li	=	purple
ge	=	yellow
or	=	orange
rs	=	pink

Protected by copyright. Copying for private or commercial purposes, in part or in whole, is not permitted unless authorised by Volkswagen AG. Volkswagen AG does not guarantee or accept any liability with respect to the correctness of information in this document. Copyright by Volkswagen AG.
satelettronica

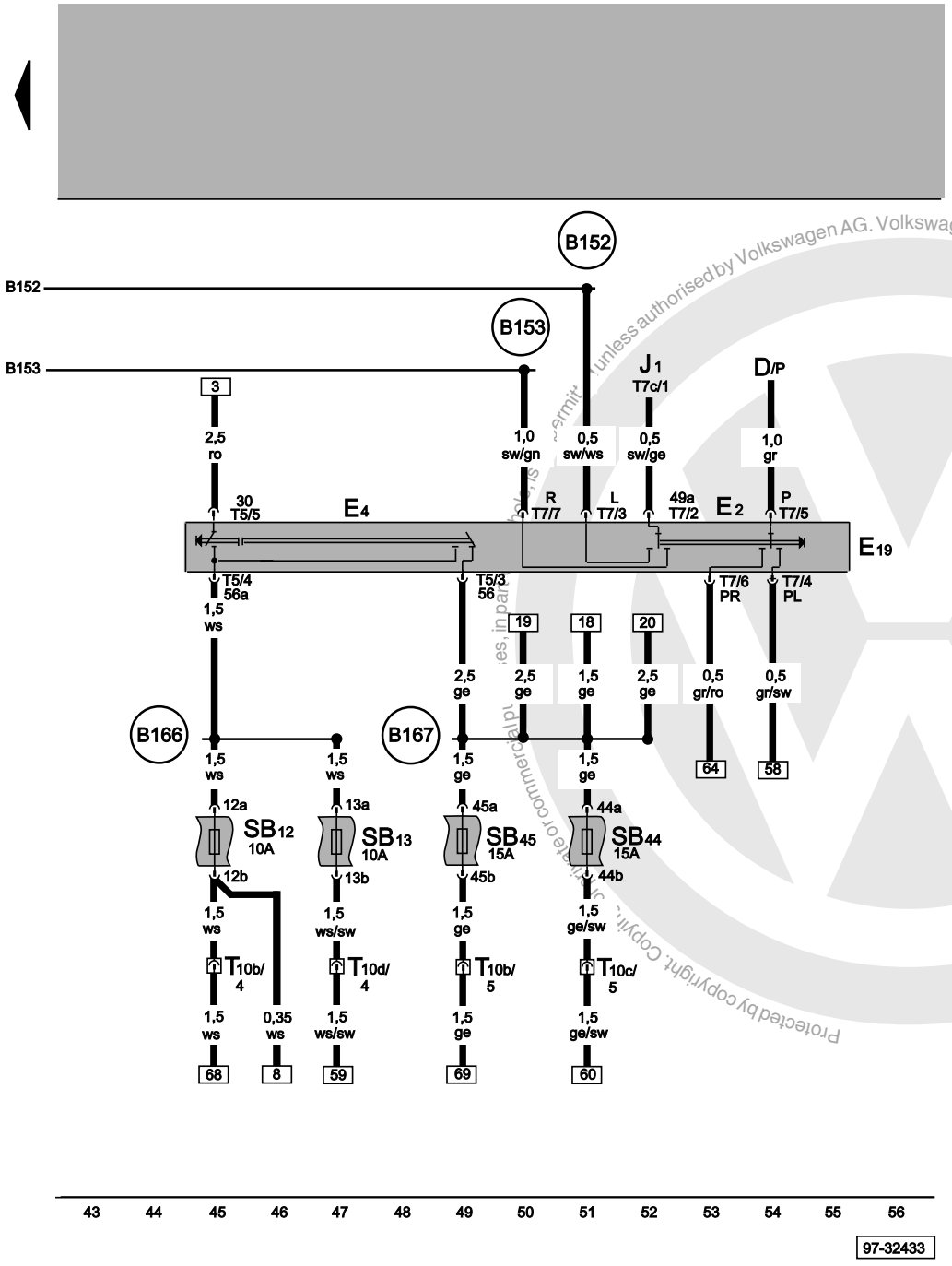

Headlight dipper/flasher switch, turn signal switch, parking light switch

D	Ignition/starter switch
E2	Turn signal switch
E4	Headlight dipper/flasher switch
E19	Parking light switch
J1	Turn signal relay
SB12	Fuse -12- on fuse box
SB13	Fuse -13- on fuse box
SB44	Fuse -44- on fuse box
SB45	Fuse -45- on fuse box
T5	5-pin connector, black, behind steering column switch trim
T7	7-pin connector, red, behind steering column switch trim
T7c	7-pin connector, black
T10b	10-pin connector, black, near relay station
T10c	10-pin connector, blue, near relay station
T10d	10-pin connector, red, near relay station
B152	Connection (BL (turn signal, left)), in interior wiring harness
B153	Connection (BR (turn signal, right)), in interior wiring harness
B166	Connection (56a), in interior wiring harness
B167	Connection (56b), in interior wiring harness

ws	=	white
sw	=	black
ro	=	red
br	=	brown
gn	=	green
bl	=	blue
gr	=	grey
li = purple
ge	=	yellow
or	=	orange
rs	=	pink

Protected by copyright. Copying or commercial use, in parts, is not permitted unless authorised by Volkswagen AG. Volkswagen AG does not guarantee or accept any liability with respect to the correctness of information in this document. Copyright by Volkswagen AG.

satelettronica

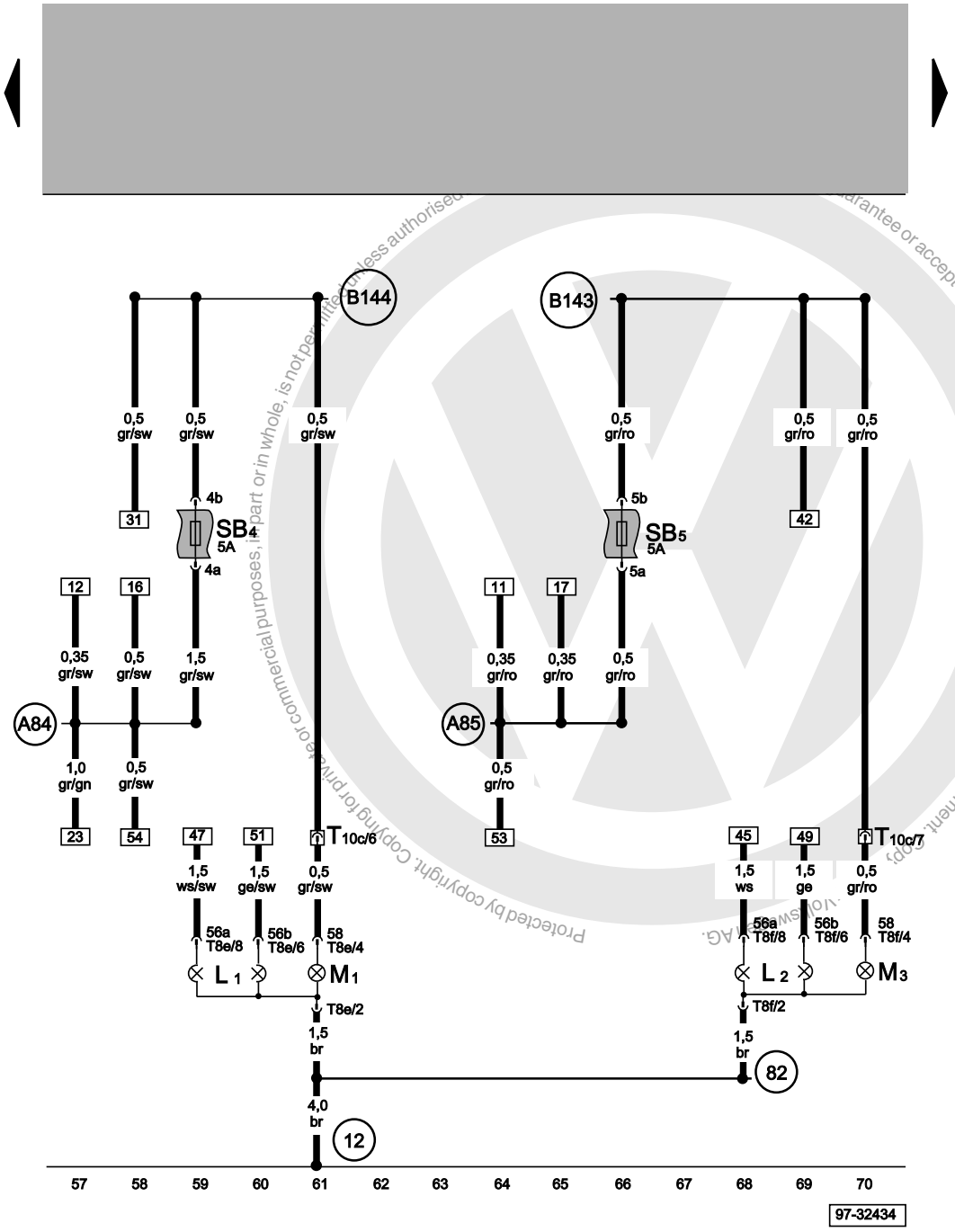

Left headlight, left side light, right headlight, right side light

L1	Twin filament bulb for headlight, left
L2	Twin filament bulb for headlight, right
M1	Side light bulb, left
M3	Side light bulb, right
SB4	Fuse -4- on fuse box
SB5	Fuse -5- on fuse box
T8e	8-pin connector, black, near headlight, left
T8f	8-pin connector, black, near headlight, right
T10c	10-pin connector, blue, near relay station
12	Earth point, in engine compartment, left
82	Earth connection -1-, in front left wiring harness
A84	Connection (58L), in dash panel wiring harness
A85	Connection (58R), in dash panel wiring harness
B143	Positive (+) connection (58R), in interior wiring harness
B144	Positive (+) connection (58L), in interior wiring harness

ws	=	white
sw	=	black
ro	=	red
br	=	brown
gn	=	green
bl	=	blue
gr	=	grey
li = purple
ge = yellow
or = orange
rs = pink

Protected by copyright. Copying for private or commercial purposes, in part or in whole, is not permitted unless authorised by Volkswagen AG. Volkswagen AG does not guarantee or accept any liability with respect to the correctness of information in this document. copyright by Volkswagen AG.

satelettronica

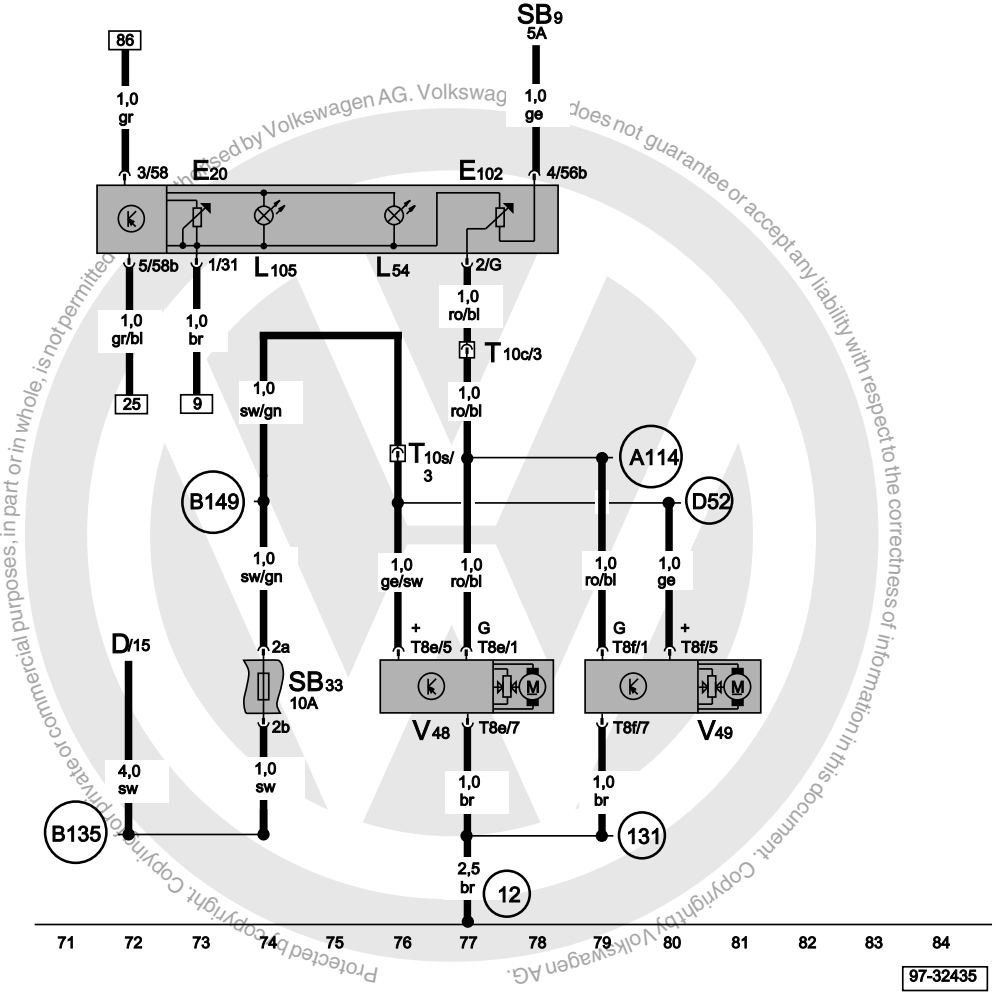

Switches and instruments - lighting control, headlight range control

D	Ignition/starter switch
E20	Switches and instruments - lighting control
E102	Headlight range control adjuster
L54	Headlight range control adjuster light bulb
L105	Illumination control switch illumination
SB9	Fuse -9- on fuse box
SB33	Fuse -33- on fuse box
T8e	8-pin connector, black, near headlight, left
T8f	8-pin connector, black, near headlight, right
T10c	10-pin connector, blue, near relay station
T10s	10-pin connector, green, near relay station
V48	Headlight range control motor, left
V49	Headlight range control motor, right
12	Earth point, in engine compartment, left
131	Earth connection -2-, in engine compartment wiring harness
A114	Connection (headlight range control), in dash panel wiring harness
B135	Connection -1- (15a), in interior wiring harness
B149	Positive (+) connection -2- (15a), in interior wiring harness
D52	Positive (+) connection (15a), in engine compartment wiring harness

ws	=	white
sw	=	black
ro	=	red
br	=	brown
gn	=	green
bl	=	blue
gr	=	grey
li = purple
ge = yellow
or = orange
rs = pink

Protected by copyright. Copying for private or commercial purposes, in part or in whole, is not permitted unless authorised by Volkswagen AG. Volkswagen AG does not guarantee or accept any liability with respect to the correctness of information in this document. Copyright by Volkswagen AG.

satelettronica

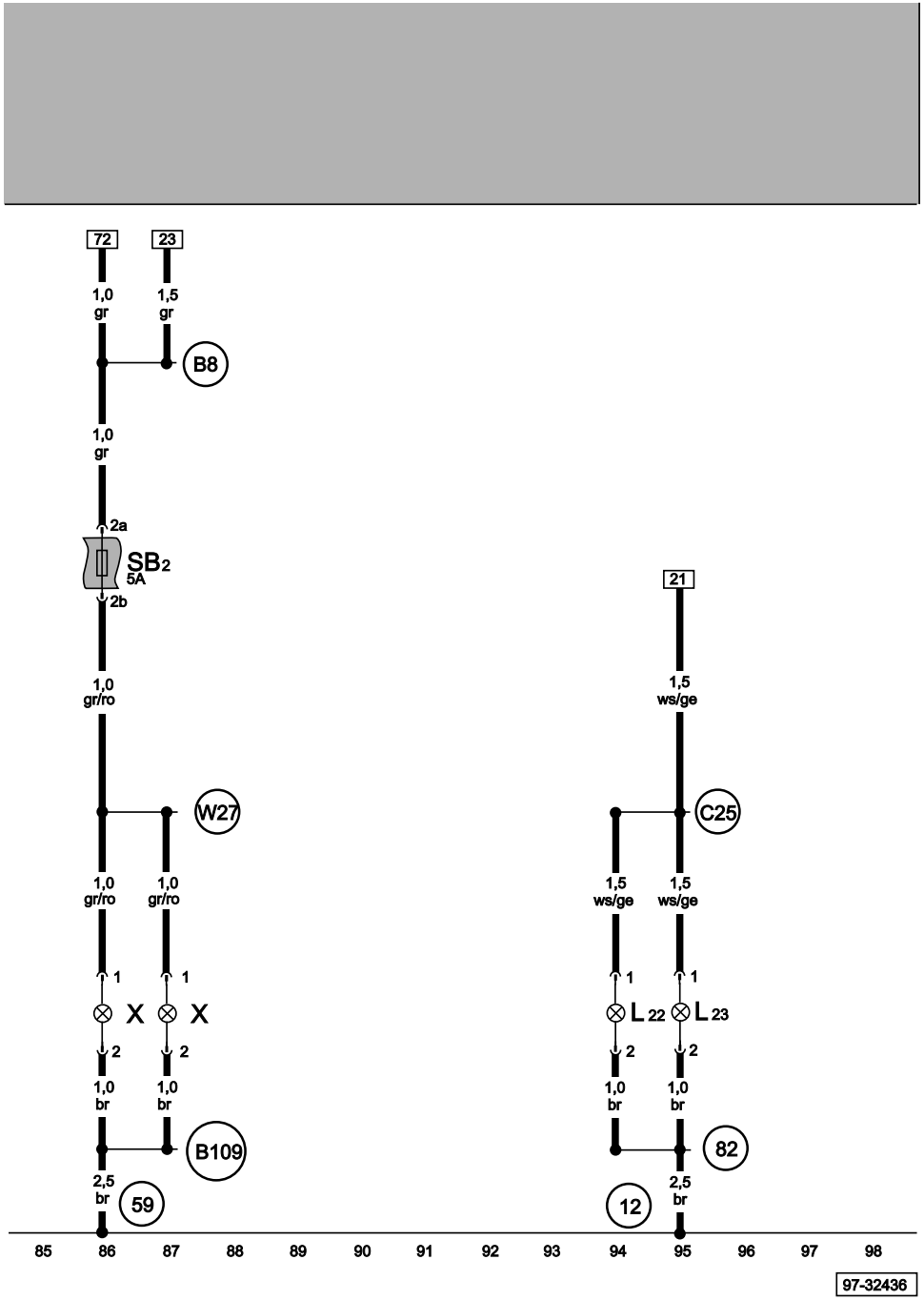

Number plate light, fog light

L22	Fog light bulb, left
L23	Fog light bulb, right
SB2	Fuse -2- in relay plate fuse box
X	Number plate light
12	Earth point, in engine compartment, left
59	Earth point, near left tail light
82	Earth connection -1-, in front left wiring harness
B8	Positive (+) connection (58), in light switch wiring harness
B109	Earth connection, in interior wiring harness, rear left
C25	Connection (fog light), in front lighting wiring harness
W27	Positive (+) connection (58), in tail light wiring harness

ws	=	white
sw	=	black
ro	=	red
br	=	brown
gn	=	green
bl	=	blue
gr	=	grey
li	=	purple
ge	=	yellow
or	=	orange
rs	=	pink

Protected by copyright. Copying for private or commercial purposes, in part or in whole, is not permitted unless authorised by Volkswagen AG. Volkswagen AG does not guarantee or accept any liability with respect to the correctness of information in this document. Copyright by Volkswagen AG.
satelettronica

Daytime running light

From October 1999

Protected by copyright. Copying for private or commercial purposes, in part or in whole, is not permitted unless authorised by Volkswagen AG. Volkswagen AG does not guarantee or accept any liability with respect to the correctness of information in this document. Copyright by Volkswagen AG.

satelettronica

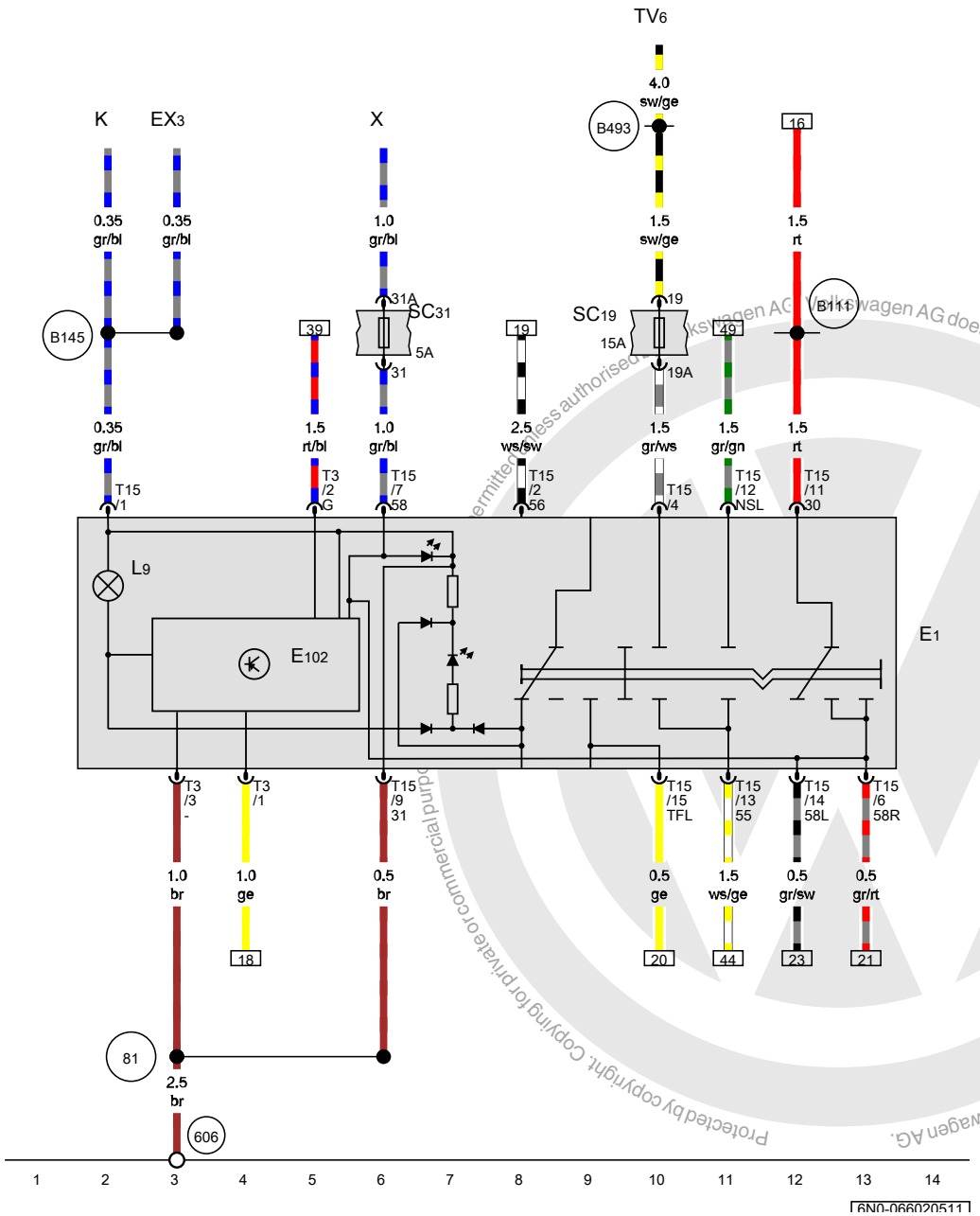

ws = white
sw = black
ro = red
br = brown
gn = green
bl = blue
gr = grey
li = purple
ge = yellow
or = orange
rs = pink

Light switch, Headlight range control regulator

E1	Light switch
EX3	Hazard warning light switch
E102	Headlight range control regulator
K	Dash panel insert
L9	Light switch illumination bulb
SC19	Fuse 19 on fuse holder C
SC31	Fuse 31 on fuse holder C
T3	3-pin connector
TV6	Terminal X wiring junction
T15	15-pin connector
X	Number plate light
81	Earth connection 1, in dash panel wiring harness
606	Earth point, under the centre console near gear stick
B111	Positive connection 1 (30a), in interior wiring harness
B145	Positive connection (58b), in interior wiring harness
B493	Connection (75x), in interior wiring harness

Protected by copyright. Copying for private or commercial purposes, in part, is not permitted unless authorised by Volkswagen AG. Volkswagen AG does not guarantee or accept any liability with respect to the correctness of information in this document. Copyright by Volkswagen AG.

satelettronica

Ignition/starter switch, Headlight dipper and flasher switch, Parking light switch, Steering column combination switch

D	Ignition/starter switch
E4	Headlight dipper and flasher switch
E19	Parking light switch
E595	Steering column combination switch
SC12	Fuse 12 on fuse holder C
SC13	Fuse 13 on fuse holder C
SC14	Fuse 14 on fuse holder C
SC15	Fuse 15 on fuse holder C
SC16	Fuse 16 on fuse holder C
SC17	Fuse 17 on fuse holder C
T5c	5-pin connector
T7c	7-pin connector

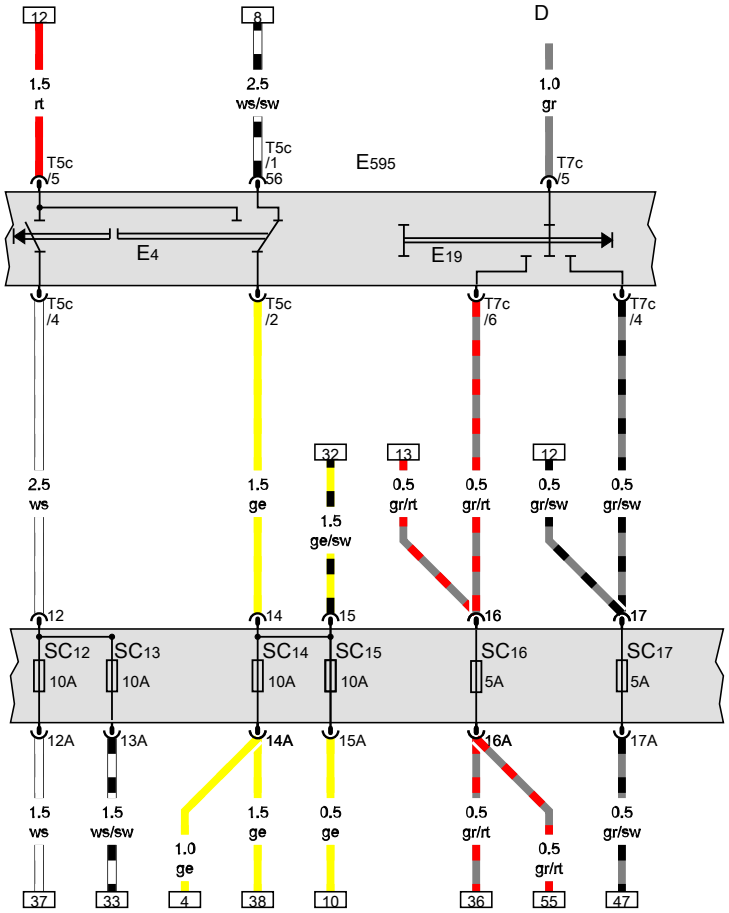

ws	=	white
sw	=	black
ro	=	red
br	=	brown
gn	=	green
bl	=	blue
gr	=	grey
li	=	purple
ge	=	yellow
or	=	orange
rs	=	pink

15 16 17 18 19 20 21 22 23 24 25 26 27 28

6N0-066030511

Protected by copyright. Copying for private or commercial purposes, in part or in whole, is not permitted unless authorised by Volkswagen AG. Volkswagen AG does not guarantee or accept any liability with respect to the correctness of information in this document. Copyright by Volkswagen AG.
satelettronica

Front left headlight, Front right headlight, Left headlight range control motor, Right headlight range control motor

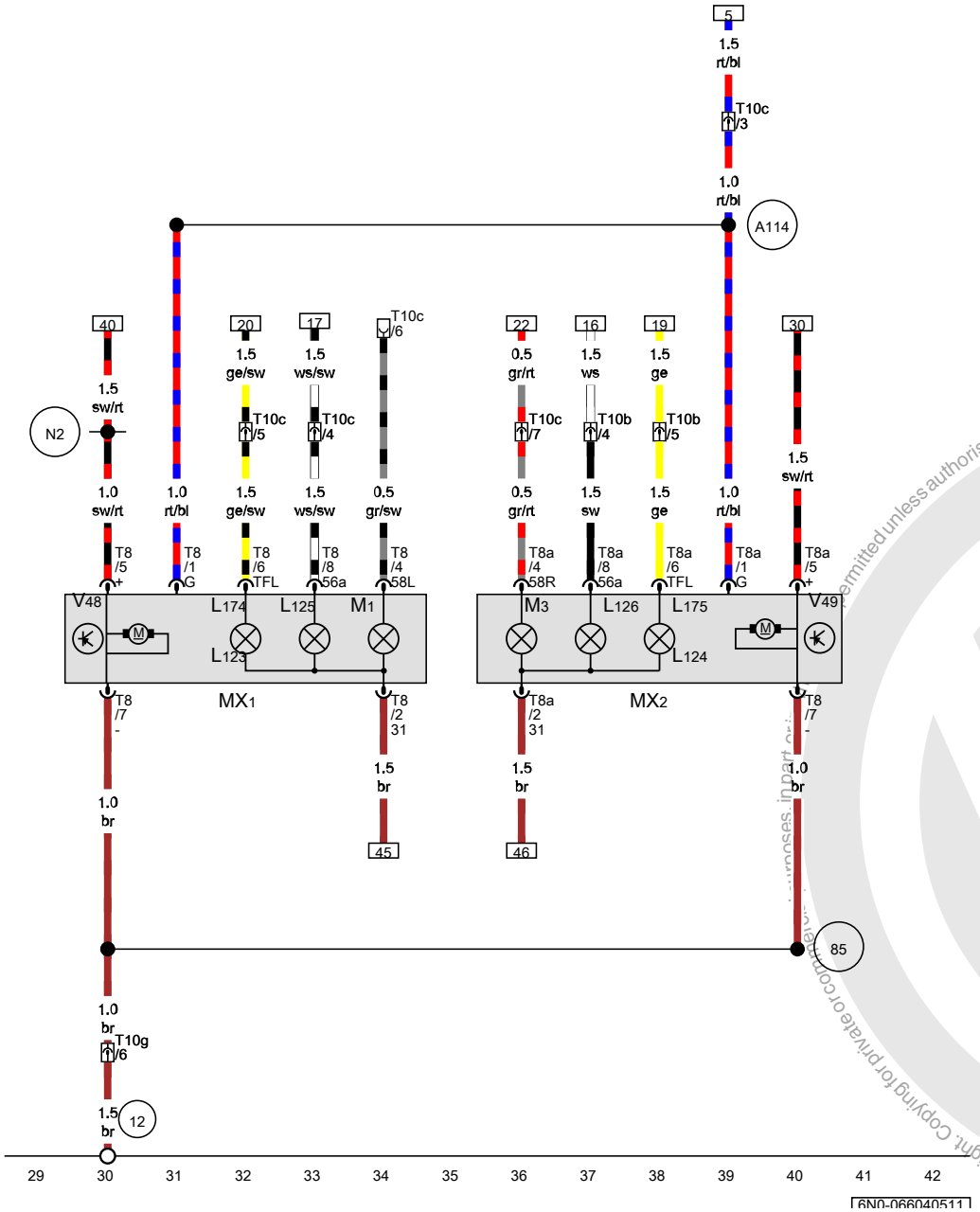

L123	Left dipped beam bulb
L124	Right dipped beam bulb
L125	Left main beam bulb
L126	Right main beam bulb
L174	Left daytime running light bulb
L175	Right daytime running light bulb
MX1	Front left headlight
M1	Left side light bulb
MX2	Front right headlight
M3	Right side light bulb
T8	8-pin connector
T8a	8-pin connector
T10b	10-pin connector, black
T10c	10-pin connector, blue
T10g	10-pin connector
V48	Left headlight range control motor
V49	Right headlight range control motor
12	Earth point, on left in engine compartment
85	Earth connection 1, in engine compartment wiring harness
A114	Connection (headlight range control), in dash panel wiring harness
N2	Connection 1, in headlight range control wiring harness

ws	=	white
sw	=	black
ro	=	red
br	=	brown
gn	=	green
bl	=	blue
gr	=	grey
li	=	purple
ge	=	yellow
or	=	orange
rs	=	pink

Protected by copyright. Copying for private or commercial purposes, in part or in whole, is not permitted unless authorised by Volkswagen AG. Volkswagen AG does not guarantee or accept any liability with respect to the correctness of information in this document. Copyright by Volkswagen AG.
satelettronica

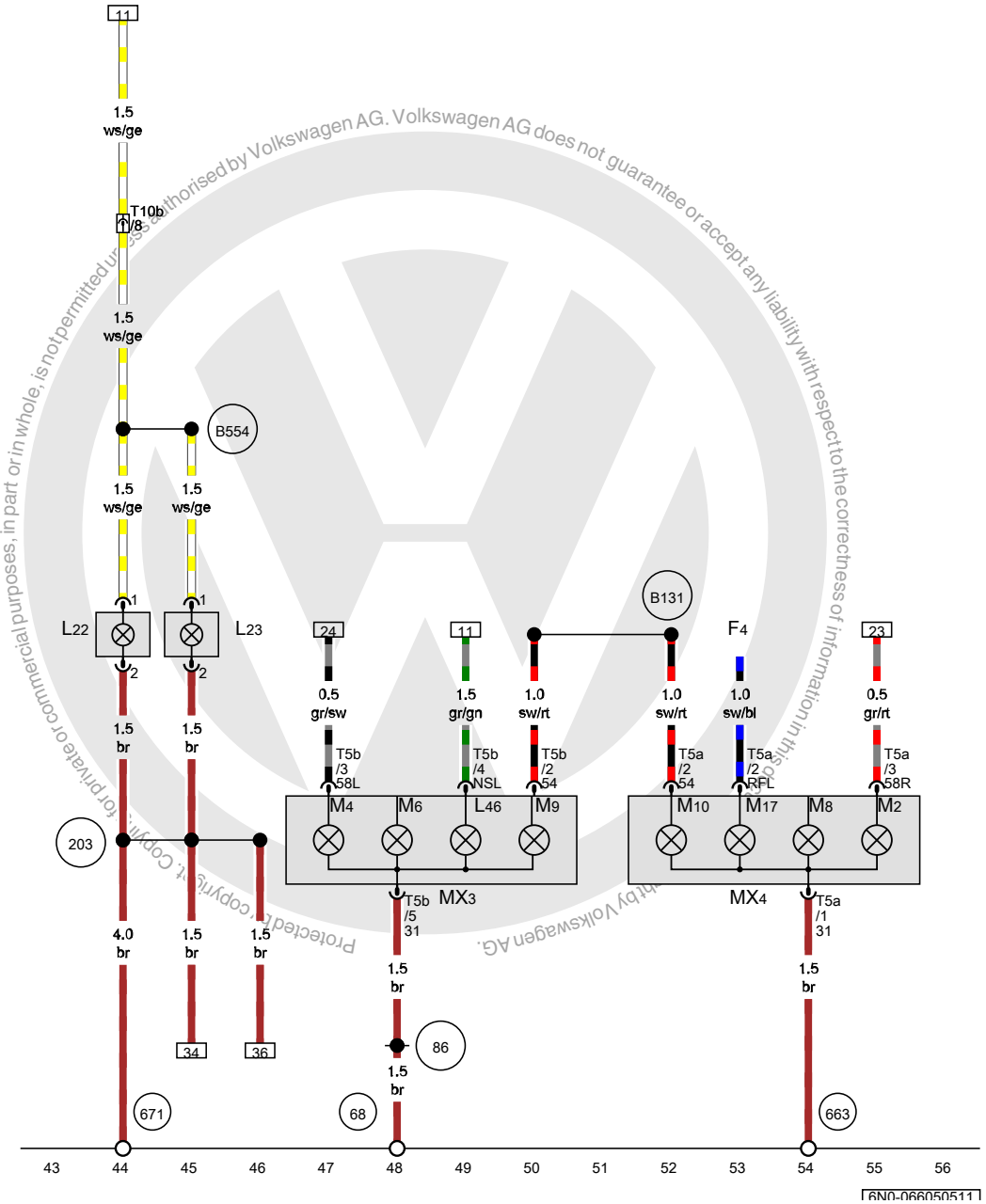

Protected by copyright. Copying for private or commercial purposes, in part or in whole, is not permitted unless authorised by Volkswagen AG. Volkswagen AG does not guarantee or accept any liability with respect to the correctness of information in this copy.

Left fog light bulb, Right fog light bulb, Left tail light, Right tail light

F4	Reversing light switch
L22	Left fog light bulb
L23	Right fog light bulb
L46	Rear left fog light bulb
M2	Right tail light bulb
MX3	Left tail light
M4	Left tail light bulb
MX4	Right tail light
M6	Rear left turn signal bulb
M8	Rear right turn signal bulb
M9	Left brake light bulb
M10	Right brake light bulb
M17	Right reversing light bulb
T5a	5-pin connector
T5b	5-pin connector
T10b	10-pin connector, black
68	Earth point, on left of rear cross member
86	Earth connection 1, in rear wiring harness
203	Earth connection, in front fog light wiring harness
663	Earth point, rear right side panel
671	Earth point 1, on front of left longitudinal member
B131	Connection (54), in interior wiring harness
B554	Connection (fog light), in main wiring harness

ws	=	white
sw	=	black
ro	=	red
br	=	brown
gn	=	green
bl	=	blue
gr	=	grey
li	=	purple
ge	=	yellow
or	=	orange
rs	=	pink

satelettronica

Radiator fan with no air conditioning system

From May 2000

Protected by copyright. Copying for private or commercial purposes, in part or in whole, is not permitted unless authorised by Volkswagen AG. Volkswagen AG does not guarantee or accept any liability with respect to the correctness of information in this document. Copyright by Volkswagen AG.

satelettronica

Alternator, Radiator fan thermal switch, Radiator fan

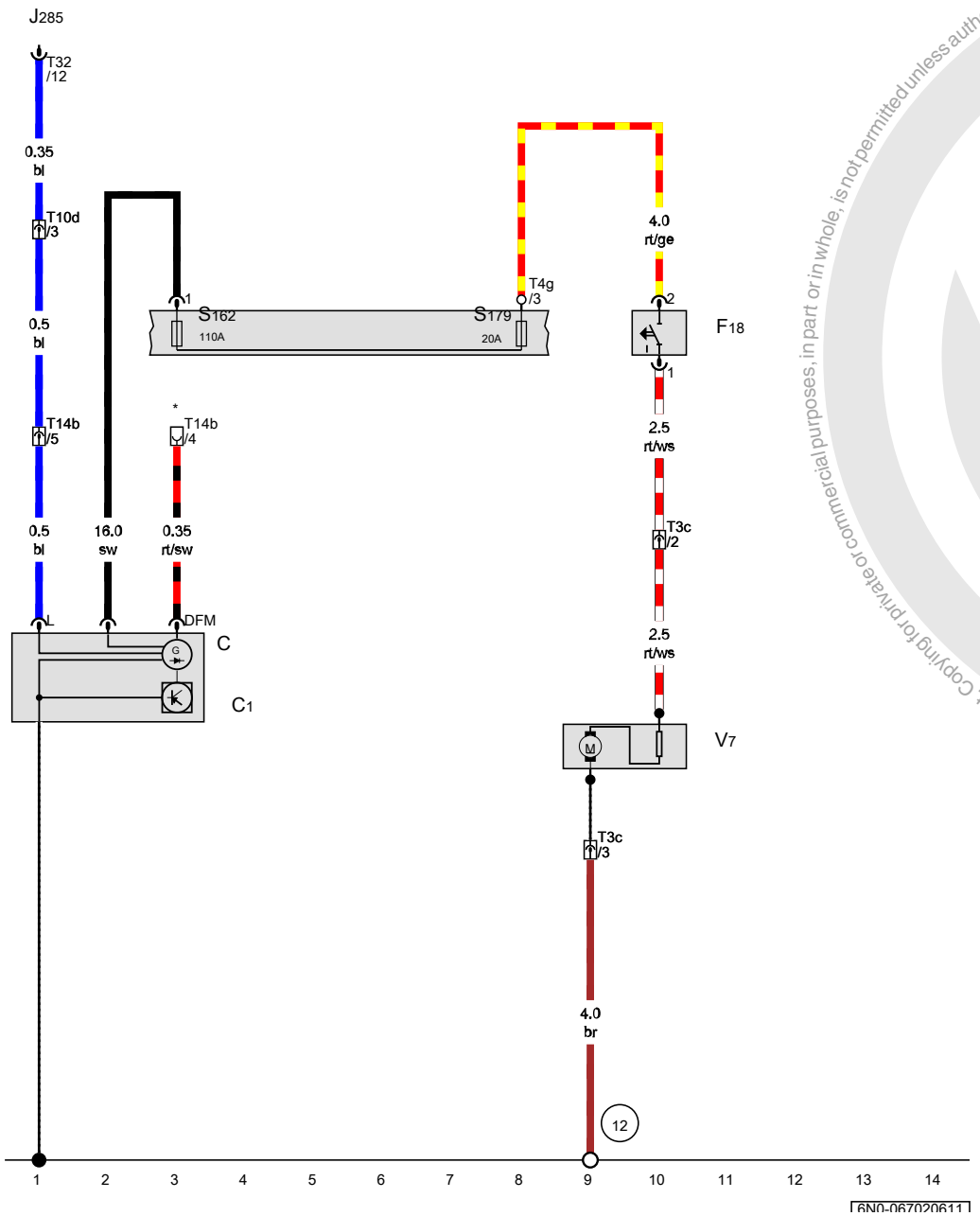

C	Alternator
C1	Voltage regulator
F18	Radiator fan thermal switch
J285	Control unit in dash panel insert
S162	Fuse 1 (30), in battery fuse holder
S179	Fuse 7 (30), in battery fuse holder
T3c	3-pin connector
T4g	4-pin connector
T10d	10-pin connector
T14b	14-pin connector
T32	32-pin connector
V7	Radiator fan
(12)	Earth point, on left in engine compartment
*	see applicable current flow diagram for engine

ws	=	white
sw	=	black
ro	=	red
br	=	brown
gn	=	green
bl	=	blue
gr	=	grey
li	=	purple
ge	=	yellow
or	=	orange
rs	=	pink

Protected by copyright. Copying for private or commercial purposes, in part or in whole, is not permitted unless authorised by Volkswagen AG. Volkswagen AG does not guarantee or assume any liability with respect to the correctness of information in this document. Copyright by Volkswagen AG.

satelettronica

Fuse holder, fuse holder/battery and relay station

- Fuse locations 1/2
- Fuse locations fuse holder/battery 1/4
- Relay locations and connector locations on relay station 1/5

satelettronica

Fuse locations

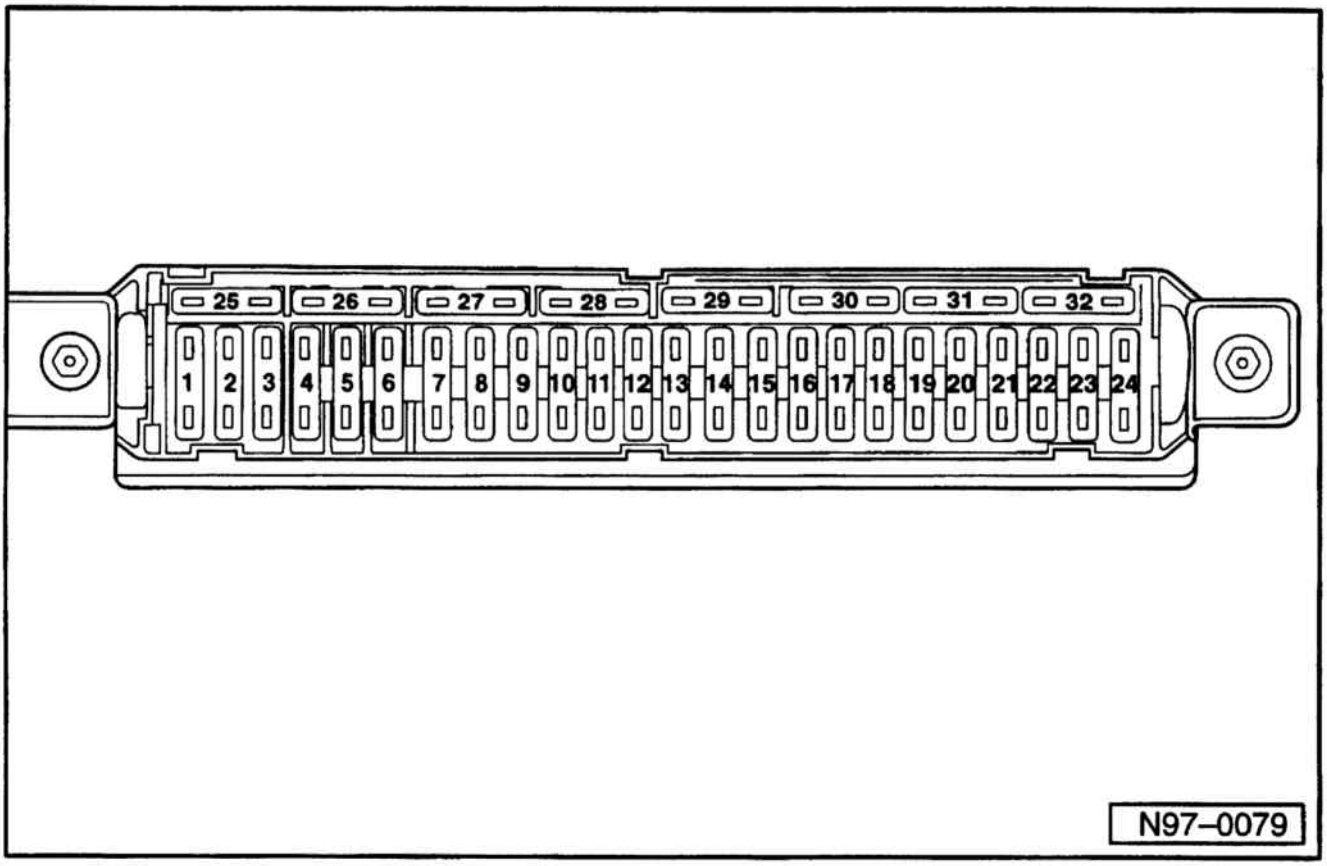

Fuse locations for optional equipment not listed can be found in the relevant current flow diagrams.

1	–	Engine control unit (15)	15A	11	–	Horn, seat heating (15)	15A
2	–	Engine control unit (30) (only on petrol engines) Engine electrics (87) (only on diesel engines)	10A	12	–	Right main beam, main beam warning lamp (56a)	10A
3	–	Engine electrics (15)	7.5A	13	–	Left main beam (56a)	10A
4	–	Ignition transformer (15)	15A	14	–	Right dipped beam, right headlight range control, headlight range control adjuster (56b)	10A
5	–	Auto. gearbox control unit, shift lock (15)	10A	15	–	Left dipped beam, left headlight range control (56b)	10A
6	–	Auto. gearbox control unit (30)	5A	16	–	Right side and tail lights (58R)	5A
7	–	ABS control unit (75x)	5A	17	–	Left side and tail lights (58L)	5A
8	–	Injectors, Lambda probe (87)	15A	18	–	Reversing light, heated washer jets, selector lever illumination (15)	7.5A
9	–	Engine control unit (15)	10A	19	–	Fog lights, rear fog light (75x)	15A
10	–	Engine control unit (15) (only on petrol engines) Engine electrics (87) (only on diesel engines)	15A	20	–	Brake lights (30)	10A

satelettronica

21	–	Hazard warning lights (30)	10A
22	–	Turn signals (75x)	5A
23	–	Windscreen wipe/wash system (75x)	15A
24	–	Rear window wiper, heated and adjustable exterior mirrors (75x)	10A
25	–	Heated rear window (75x)	15A
26	–	Dash panel insert, immobiliser (15)	5A
27	–	Self-diagnosis connection, dash panel insert, interior light, luggage compartment light (39)	5A
28	–	Radio, cigarette lighter, central locking (30)	15A
29	–	Interior light, fresh/recirculating air blower actuating motor (15)	5A
30	–	Fresh air blower (75x)	20A
31	–	Licence plate lights (58)	5A
32	–	Fuel pump (87)	15A

Fuse colours

20 A	–	Yellow
15 A	–	Blue
10 A	–	Red
7.5 A		Brown
5 A	–	Beige

satelettronica

Fuse locations fuse holder/battery

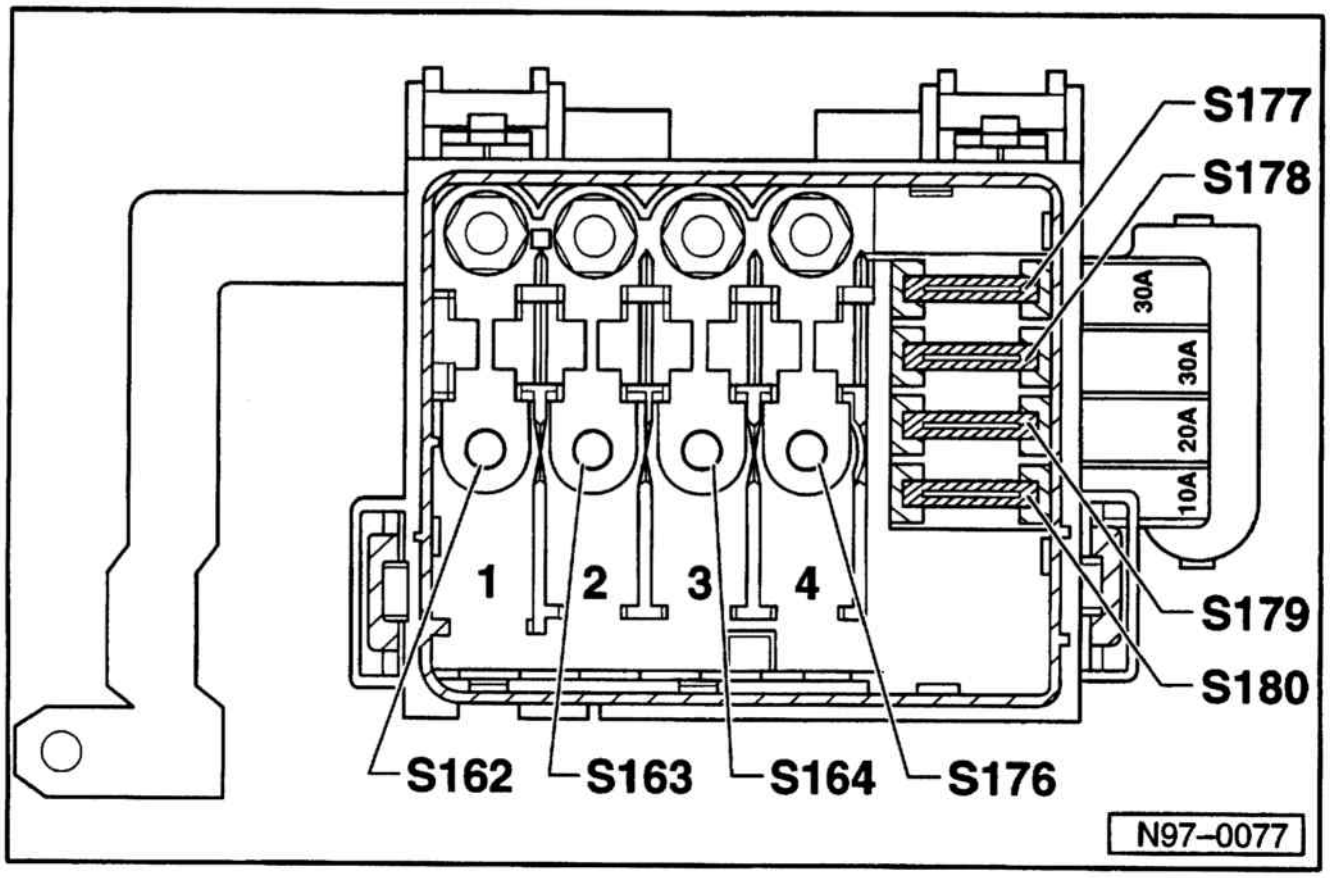

S162	-	Fuse -1- (30) Alternator	110A
S163	-	Fuse -2- (30) Relay carrier	80A
S164	-	Fuse -3- (30) Engine glow plugs	50A
S176	-	Fuse -4- (30) Coolant heater elements	50A
		Air conditioner	30A
S177	-	Fuse -5- (30) ABS control unit	30A
S178	-	Fuse -6- (30) ABS control unit	30A
S179	-	Fuse -7- (30) Radiator fan	20A
S180	-	Fuse -8- (30) Air conditioner	10A

satelettronica

Relay locations and connector locations on relay station

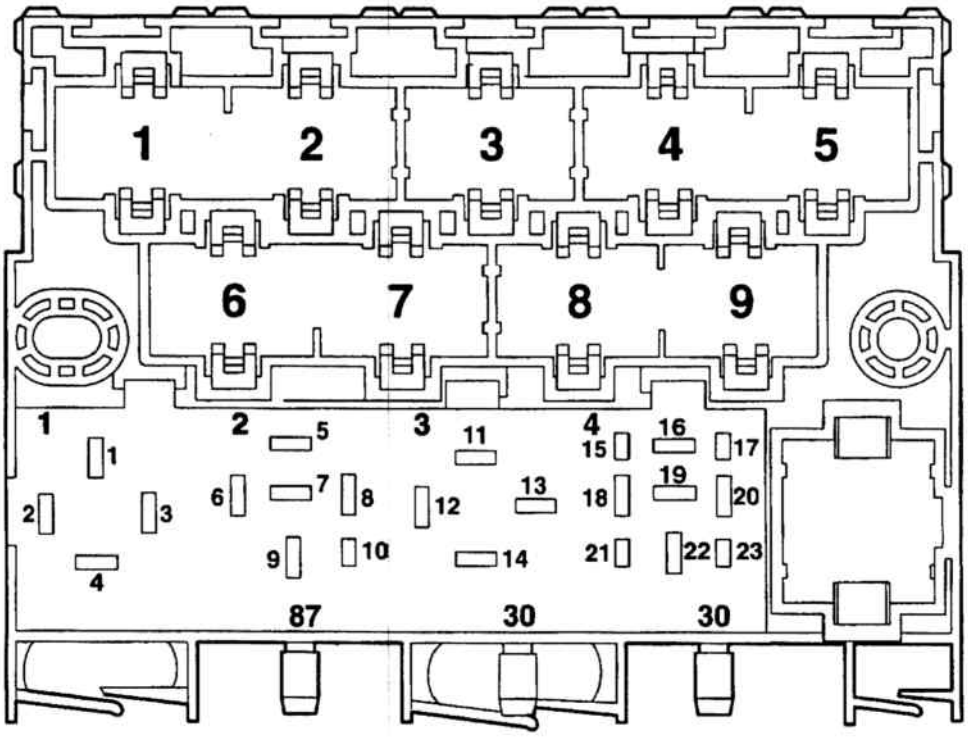

Relay locations on relay station

1 – Hazard warning light relay (21)

2 – Automatic intermittent wipe and wash relay (19)

3 – X contact relief relay (18)

4 – Fuel pump relay (167)

Connector positions on relay station

Connector location	Connector designation	Housing colour
1		
2		
3	T10C	Blue
4	T10d	Red
5	T10	White
6	T10g	Brown
7		
8	T10a	Green
9	T10b	Black

The stud with the designation 87 carrys the potential 75X

satelettronica

Multi-pin connectors

Note:

Multi-pin connectors on control units and relays ⇒ Fitting locations No. 3

Contents

Automatic gearbox:

- Soleniod valves and gearbox oil sender (G93) 2/6
- Multi-function switch (F125) 2/6

Self-diagnosis:

- 16-pin connector behind stowage compartment on drivers side 2/9

Lamps, lights, switches – exterior:

- 19-pin multi-pin connector 2/7
- Left and right headlights 2/7

Lamps, lights, switches – interior, anti-theft alarm:

- Lighting switch (E1) and headlight range control adjuster (E102) 2/8
- Mirror adjustment switch (E43) and mirror adjustment change-over switch (E48) 2/8

Engine connector:

- Engine connector, petrol engine with automatic gearbox 2/2
- Engine connector, 1.7 ltr/42 kW cat. diesel engine, engine code AHG, 1.9 ltr/47 kW cat diesel engine, engine code AGD 2/3
- Engine connector, 1.9 ltr/47 kW cat. diesel engine, engine code AEF, from November 1995 ..... 2/4

Coupling stations:

- Left and right A pillar coupling stations 2/5

satelettronica

Engine connector, all petrol engines with automatic gearbox

28-pin multi-pin connector

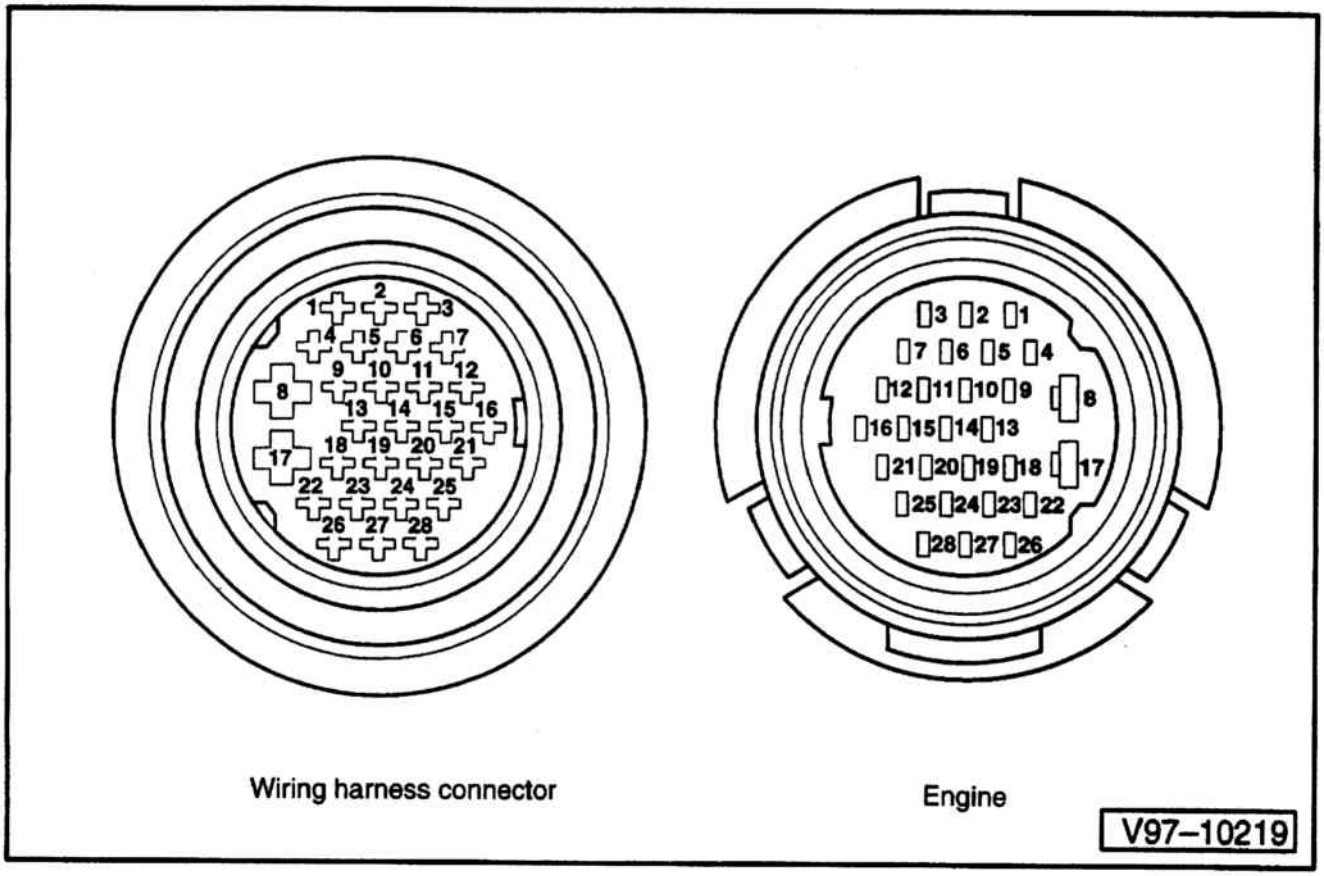

satelettronica

Engine connector, 1.7 ltr./42kW diesel engine, engine code AHG,
1.9 ltr./47kW cat. diesel engine, engine code AGD

24-pin multi-pin connector

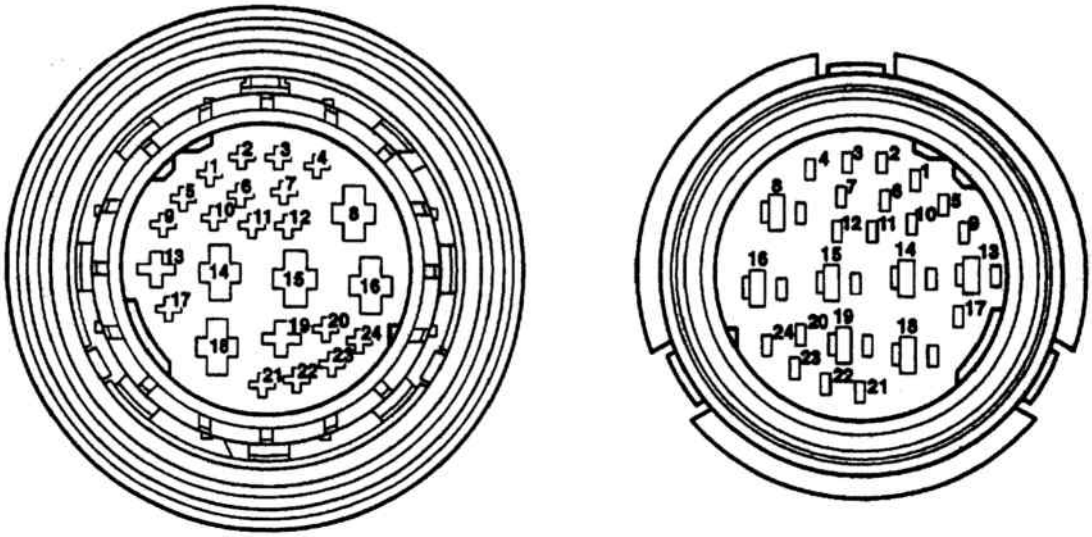

satelettronica

Engine connector, 1.9 ltr./47kW cat. diesel engine, engine code AEF, from November 1995

19-pin multi-pin connector

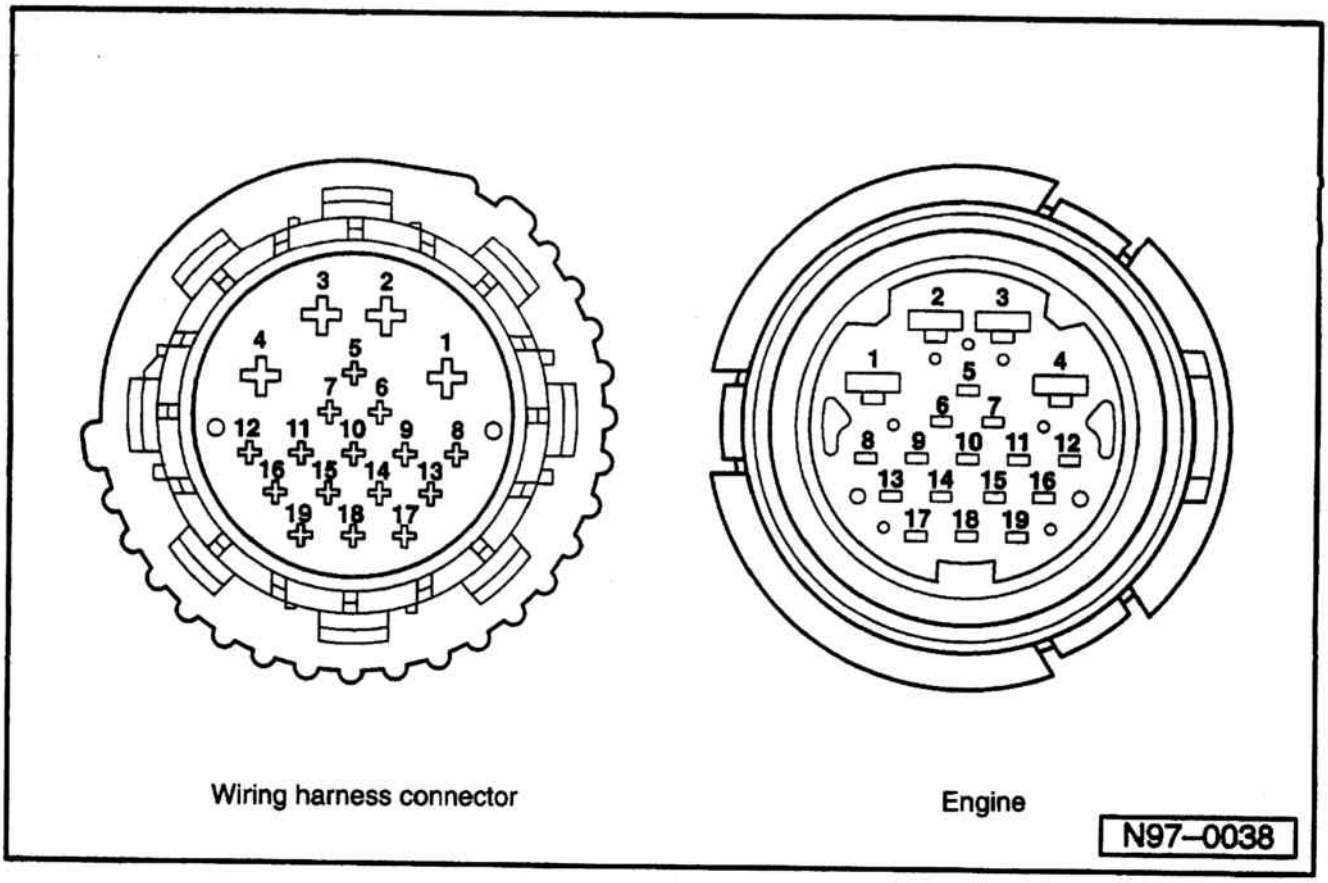

satelettronica

Left and right A pillar coupling station

18-pin multi-pin connector

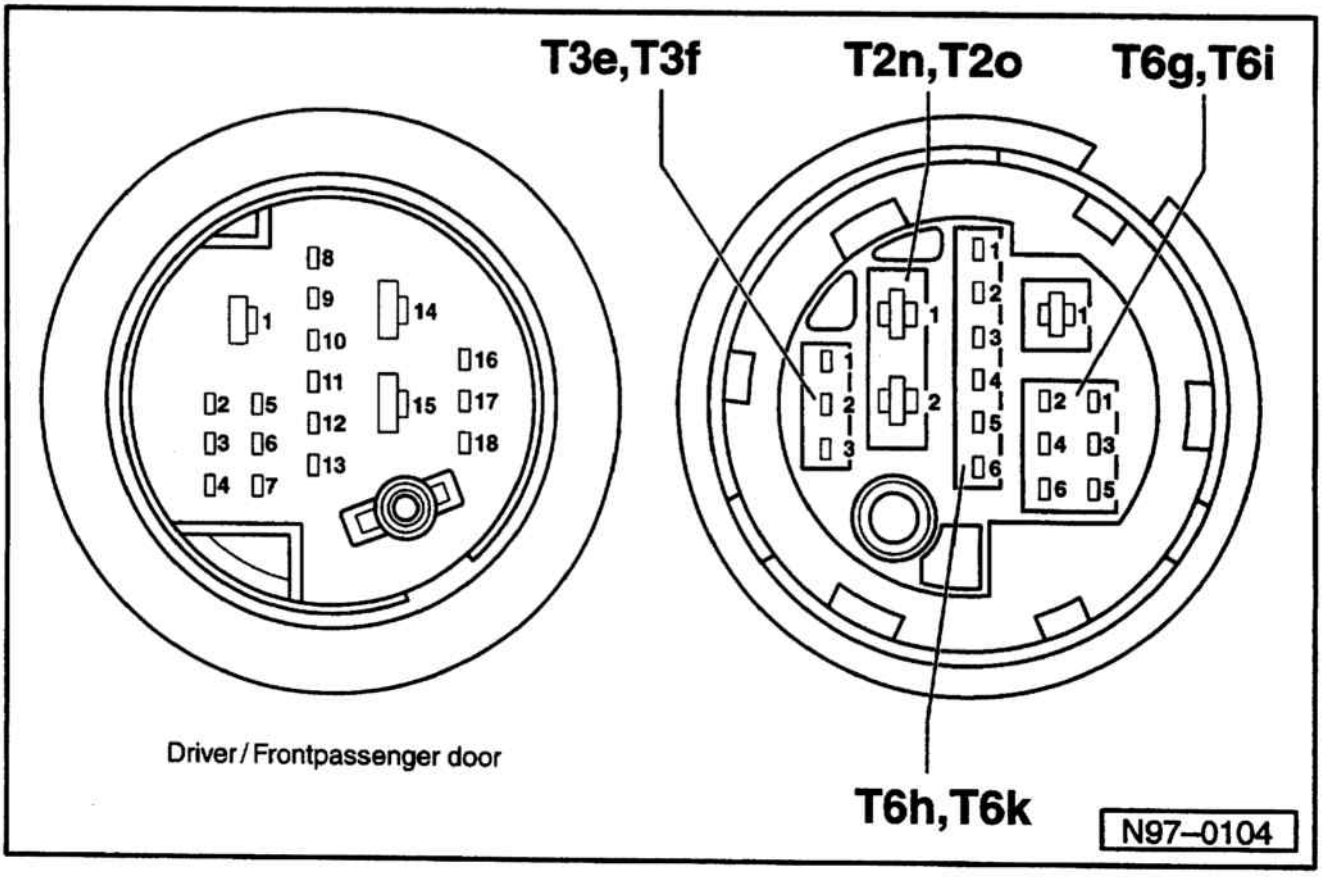

Connector assignment

1	–	T18/1 or T18a/1	10	–	T18/10 or T18a/10
2	–	T18/2 or T18a/2	11	–	T18/11or T18a/11
3	–	T18/3 or T18a/3	12	–	T18/12 or T18a/12
4	–	T18/4 or T18a/4	13	–	T18/13 or T18a/13
5	–	T18/5 or T18a/5	14	–	T18/14 or T18a/14
6	–	T18/6 or T18a/6	15	–	T18/15 or T18a/15
7	–	T18/7 or T18a/7	16	–	T18/16 or T18a/16
8	–	T18/8 or T18a/8	17	–	T18/17 or T18a/17
9	–	T18/9 or T18a/9	18	–	T18/18 or T18a/18

Connector:

T3e – 3-pin connector, black, on left lower A pillar
T3f – 3-pin connector, black, on right lower A pillar
T2n – 2-pin connector, black, on left lower A pillar
T2o – 2-pin connector, black, on right lower A pillar
T6g – 6-pin connector, black, on left lower A pillar
T6i – 6-pin connector, black, on right lower A pillar
T6h – 6-pin connector, black, on left lower A pillar
T6k – 6-pin connector, black, on right lower A pillar

satelettronica

Automatic gearbox

Solenoid valves and gearbox oil temperature sender (G93)

A – Wiring harness connector

B – Solenoid valves and gearbox oil temperature sender (G93)

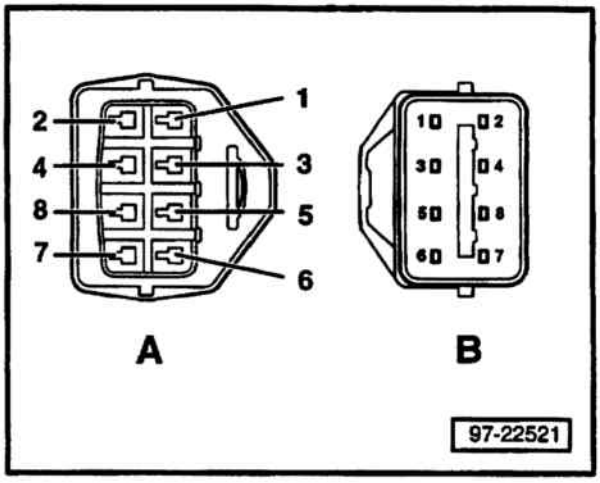

Multi-function switch (F125)

A – Wiring harness connector

B – Multi-function switch (F125)

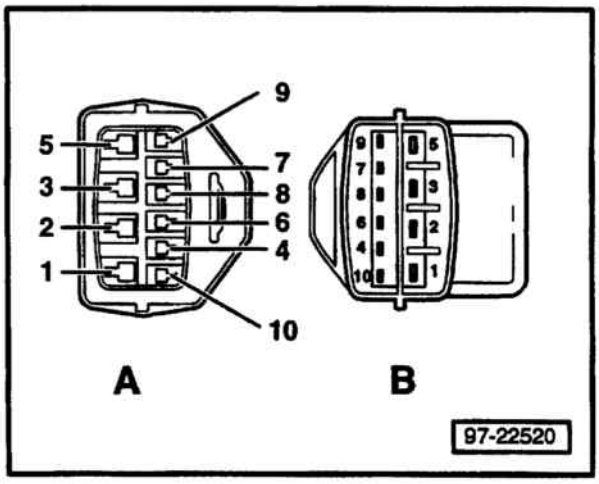

satelettronica

Lamps, lights, switches – exterior

19-pin multi-pin connector

- Front lighting

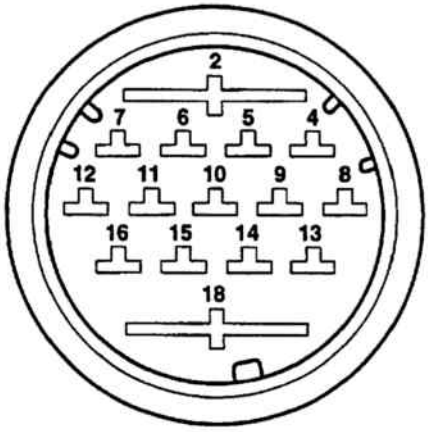

Frontend

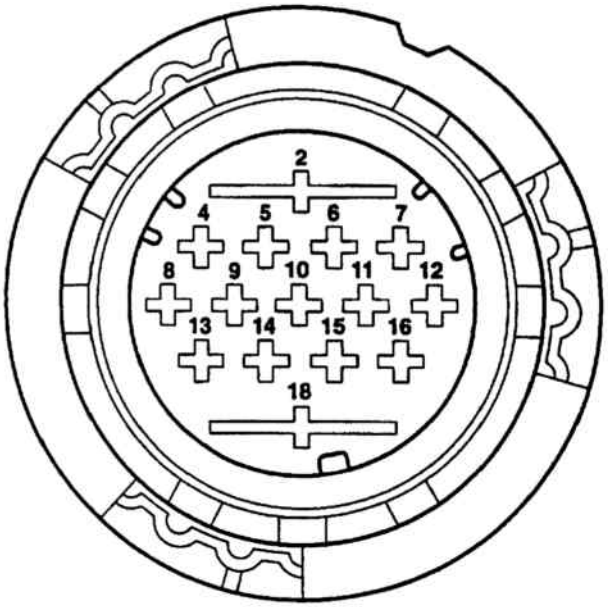

Wiring harness connector

V97–10220

Left and right headlights

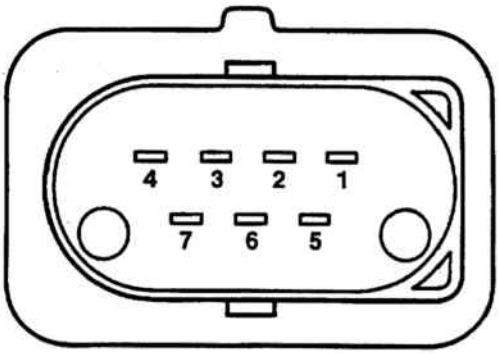

Left and right headlights

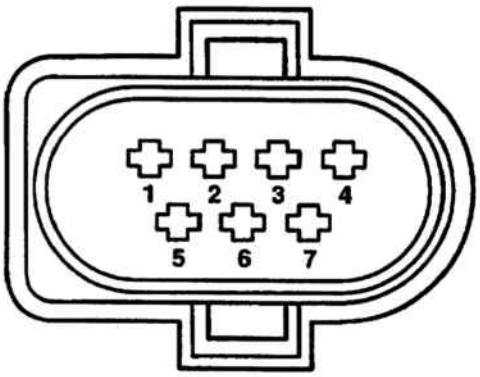

Wiring harness connector

97–21994

satelettronica

Lamps, lights, switches – interior, anti-theft alarm

Lighting switch (E1) and headlight range control adjuster (E102)

- 15-pin connector on lighting switch (E1)
- 3-pin connector on headlight range control adjuster (E102)

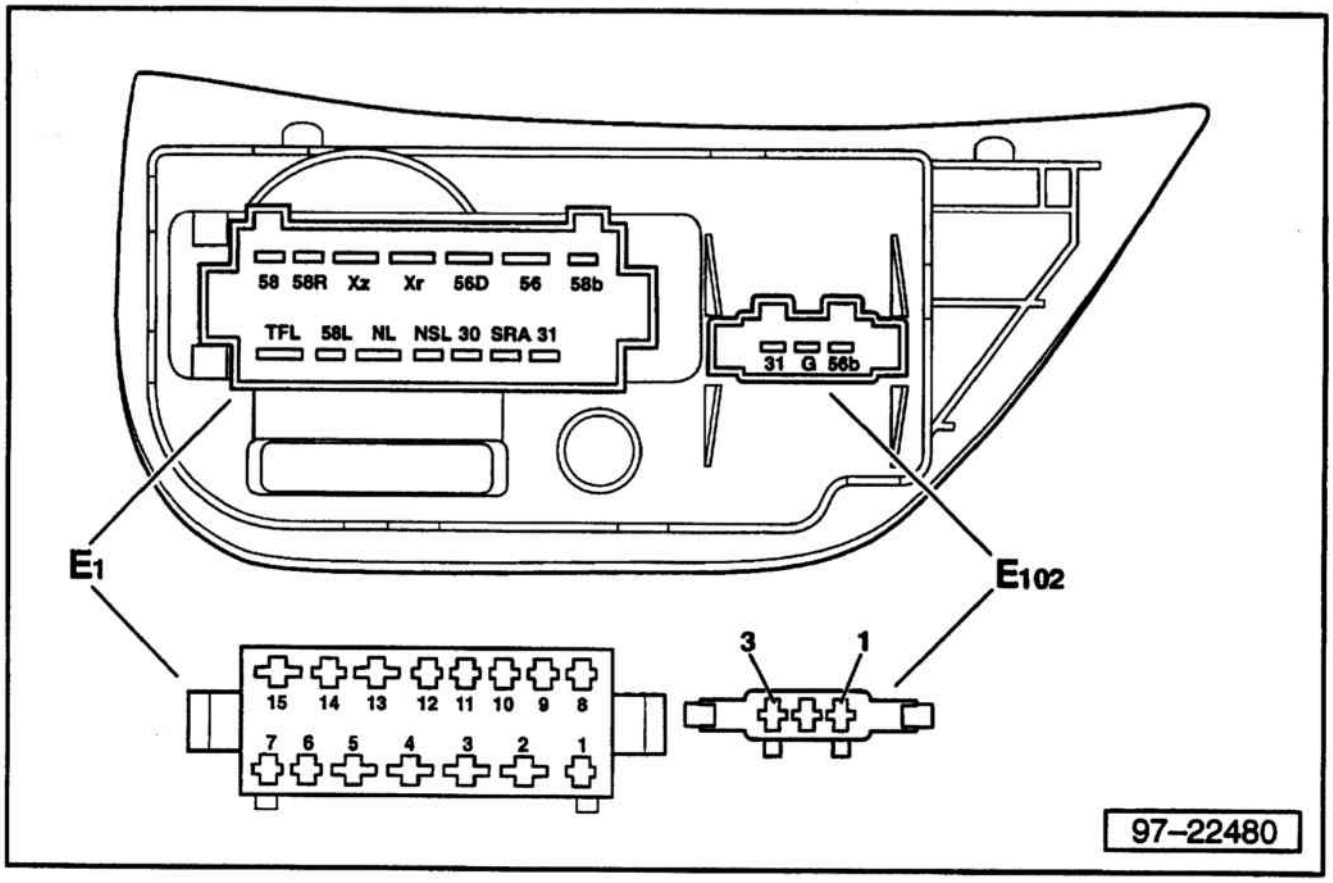

Mirror adjustment switch (E43) and mirror change-over switch (E48)

A – Wiring harness connector

B – Mirror adjustment switch (E43) and mirror change-over switch (E48)

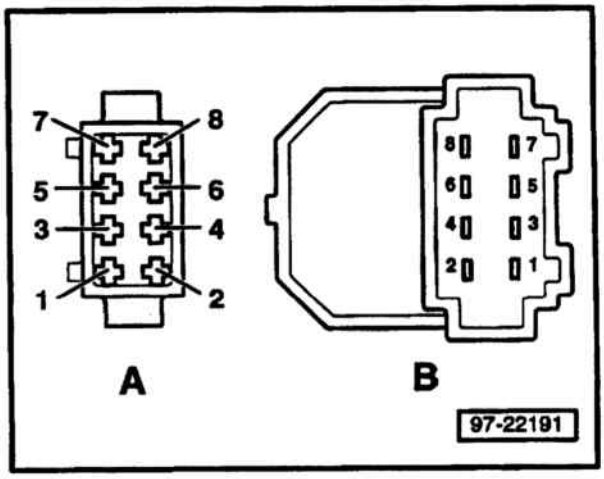

satelettronica

Self-diagnosis

16-pin connector

Location: Behind stowage compartment
on drivers side

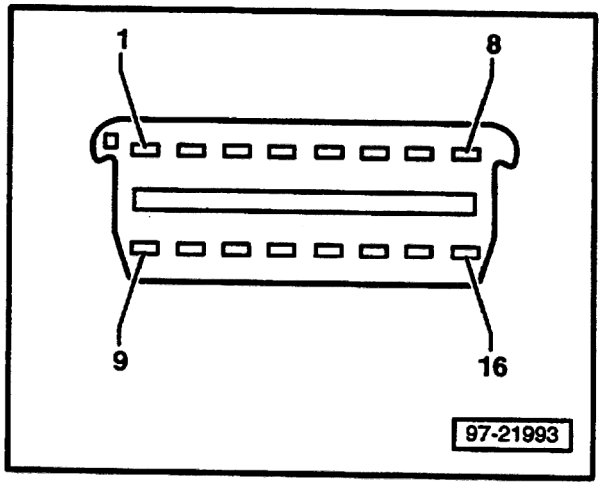

satelettronica

Control units and relays

Contents

- ABS control unit (25-pin connector) 3/2
- Immobilizer control unit 3/2
- Central locking control unit 3/3

satelettronica

ABS control unit

Location: On left in engine compartment

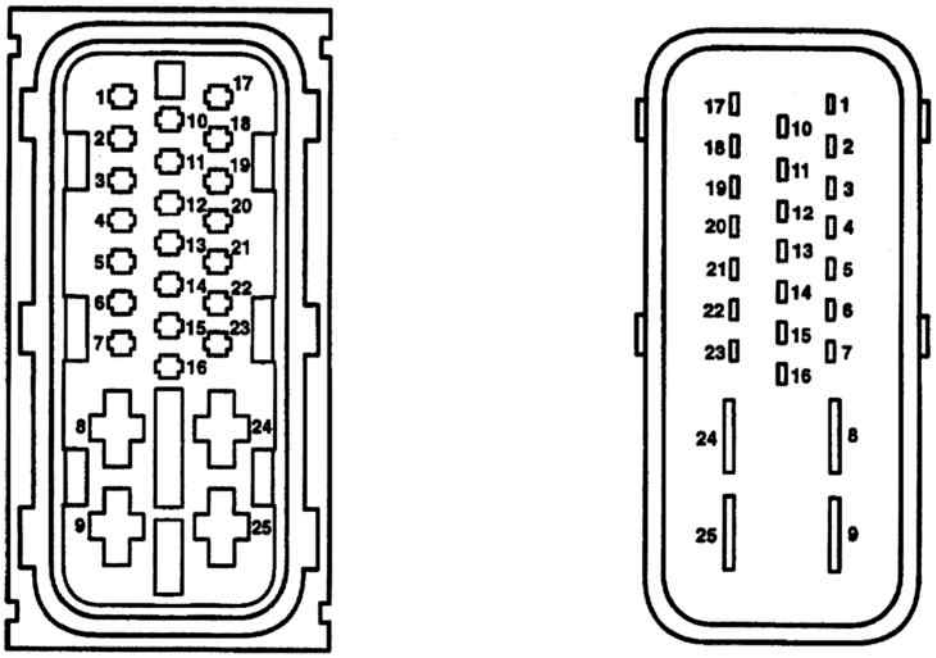

ABS control unit

Wiring harness connector

97-21978

Immobilizer control unit

Location: On left behind dash panel

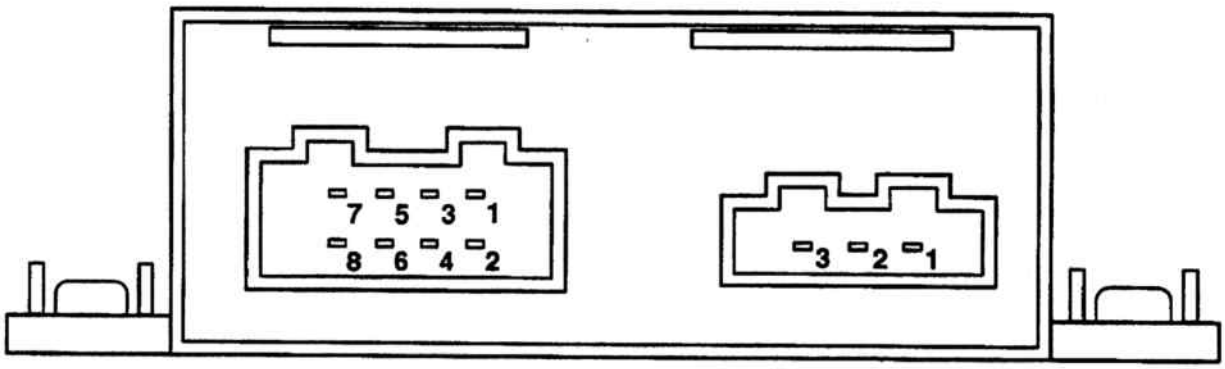

97–22238

satelettronica

Central locking control unit

Location: On rear right in luggage compartment

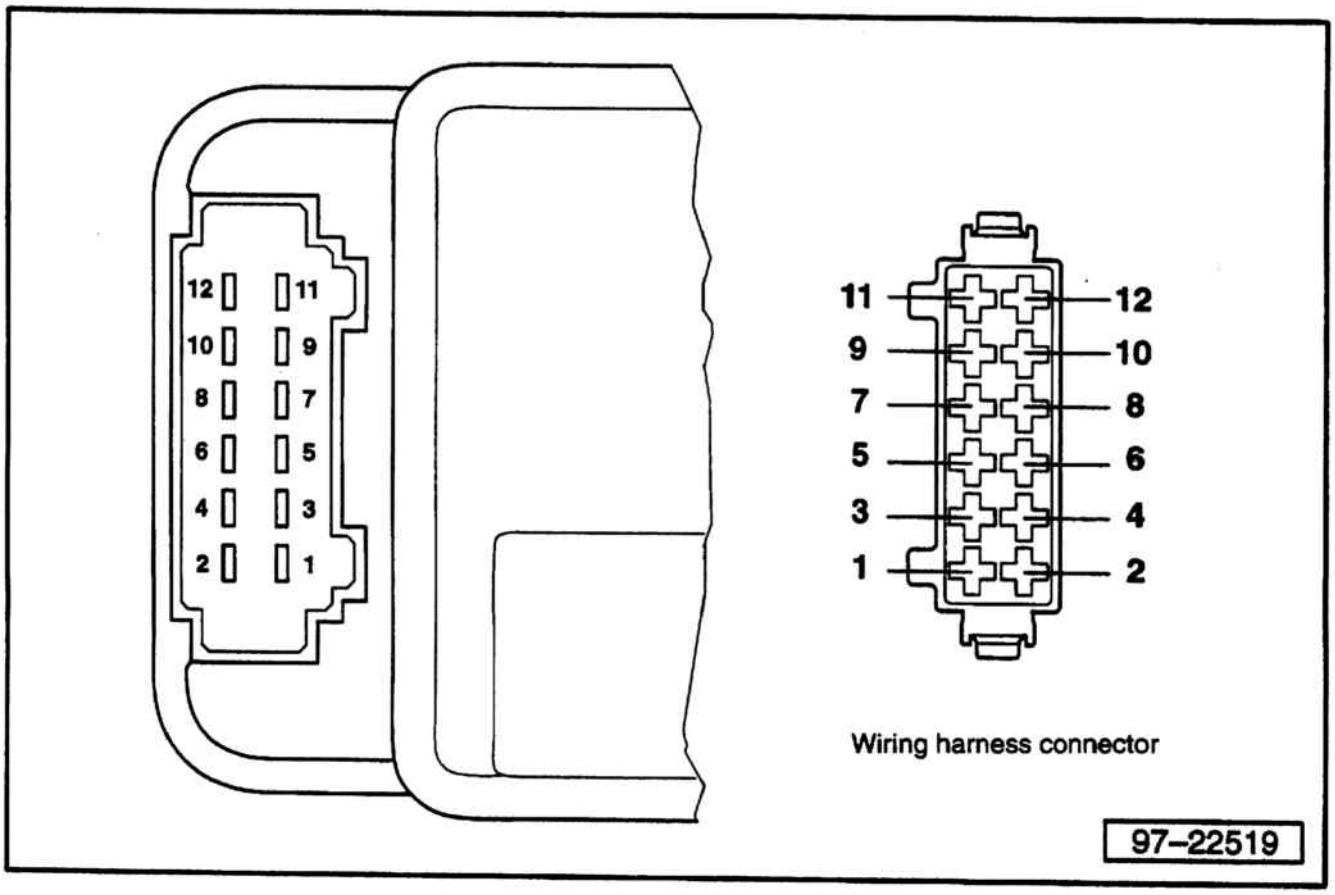

satelettronica

Relay positions and fuse locations (as of October 99)

- Relay positions on relay carrier 4/2
- Fuse locations on fuse holder (on left of dash panel) 4/3
- Fuse locations on battery fuse holder 4/5

satelettronica

Relay positions on relay carrier

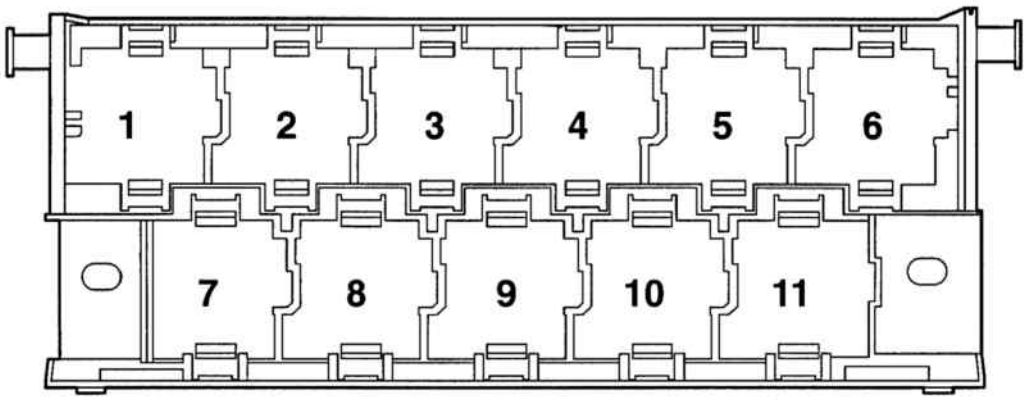

97-23003

Relay positions on relay carrier

1 – Fuel pump relay (410) - petrol engines only
Fuel shut-off control unit (405) - diesel engines only

2 – Automatic intermittent wash/wipe and rain sensor relay (19)

7 – X contact relief relay (100)

8 – Heated exterior mirror relay (53)

The connections on the coupling station are listed in the section "Coupling station below relay carrier".

satelettronica

Position of fuses in fuse box, dash panel, left

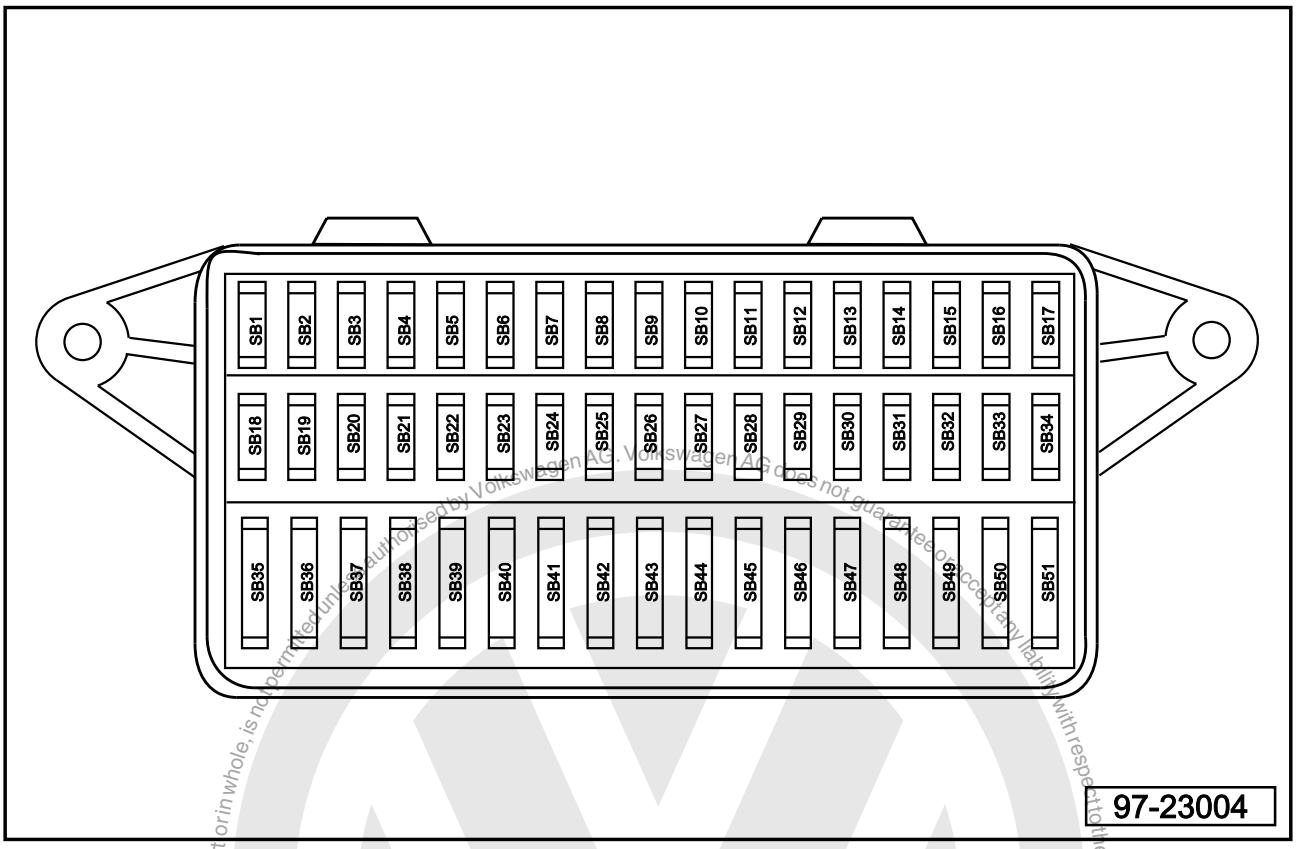

Fuses location for optional equipment not listed can also be found in the appropriate current flow diagrams.

SB1	-	Lambda probe heating, ACF, camshaft variable timing adjuster	10 A	SB15	-	Brake lights	10 A
SB2	-	Number plate lights	5 A	SB16	-	Ignition/starter switch S-contact	5 A
SB3	-	Injectors	10 A	SB17	-	Not used	
SB4	-	Side bulb left	5 A	SB18	-	Mirror heating	5 A
SB5	-	Side light bulb	5 A	SB19	-	Horn	15 A
SB6	-	Rear wiper	15 A	SB20	-	Telephone/preparationfor telephone	10 A
SB7	-	Turn signals	7.5 A	SB21	-	Automatic gearbox control unit	5 A
SB8	-	ABS with EDL/ESP	5 A	SB22	-	Anti-theft alarm system horn	15 A
SB9	-	Headlight range control	5 A	SB23	-	EGR, air mass meter, addit. heater relay, glow plug relay	5 A
SB10	-	Interior lighting, glove box, mirror, door entry, luggage compartment light	7.5A	SB24	-	Clutch pedal switch (diesel), brake light suppression switch (EPC)	5 A
SB11	-	Self-diagnosis connection voltage supply, dash panel insert, Climatronic	5 A	SB25	-	Selector lever switch (AG4)	5 A
SB12	-	Right headlight main beam, main beam warning lamp	10 A	SB26	-	Air conditioner, central locking, electric windows, electric mirrors, navigation	7.5A
SB13	-	Left main beam headlight	10 A	SB27	-	Dash panel insert	5 A
SB14	-	Hazard warning lights system, anti-theft alarm system	10 A	SB28	-	Speedometer sender, immobilizer	5 A

Protected by copyright. Copying for private or commercial purposes, in part or in whole, is not permitted unless authorised by Volkswagen AG. Volkswagen AG does not guarantee or accept any liability with respect to the correctness of information in this document. Copyright by Volkswagen AG.

satelettronica

SB29	-	Reversing lights, washer jet heating, headlight range control motor	7.5 A
SB30	-	Exhaust gas recirculation valve, activated charcoal filter solenoid, heater pipe	5 A
SB31	-	Fuel shut- off control unit, engine control unit	5 A
SB32	-	Fuel shut-off control unit (diesel)	5 A
SB33	-	Automatic gearbox selector lever lock	10 A
SB34	-	Ignition transformer	10 A
SB35	-	Glass sunroof, fabric sunroof	25 A
SB36	-	Engine control unit	15 A
SB37	-	Engine control unit	15 A
SB38	-	Driver's door power window	25 A
SB39	-	Front passenger's power window	25 A
SB40	-	Fuel pump	15 A
SB41	-	Central locking, anti-theft alarm system	15 A
SB42	-	Radio, navigation	15 A
SB43	-	Fog light, rear fog light	15 A
SB44	-	Dipped beam, left headlight	15 A
SB45	-	Dipped beam right headlight	15 A
SB46	-	Cigarette lighter	15 A
SB47	-	Headlight washer system	20 A
SB48	-	Heated rear window	20 A
SB49	-	Fresh air blower	25 A
SB50	-	Windscreen wiper system, windscreen washer pump	15 A
SB51	-	Seat heating	15 A

Fuse colours

30 A	-	green
25 A	-	white
20 A	-	yellow
15 A	-	blue
10 A	-	red
7.5 A	-	brown
5 A	-	beige
3 A	-	purple

Protected by copyright. Copying for private or commercial purposes, in any form or medium, is not permitted unless authorised by Volkswagen AG. Volkswagen AG does not guarantee or accept any liability with respect to the correctness of information in this document. Copyright by Volkswagen AG.
satelettronica

Fuse positions on battery fuse holder

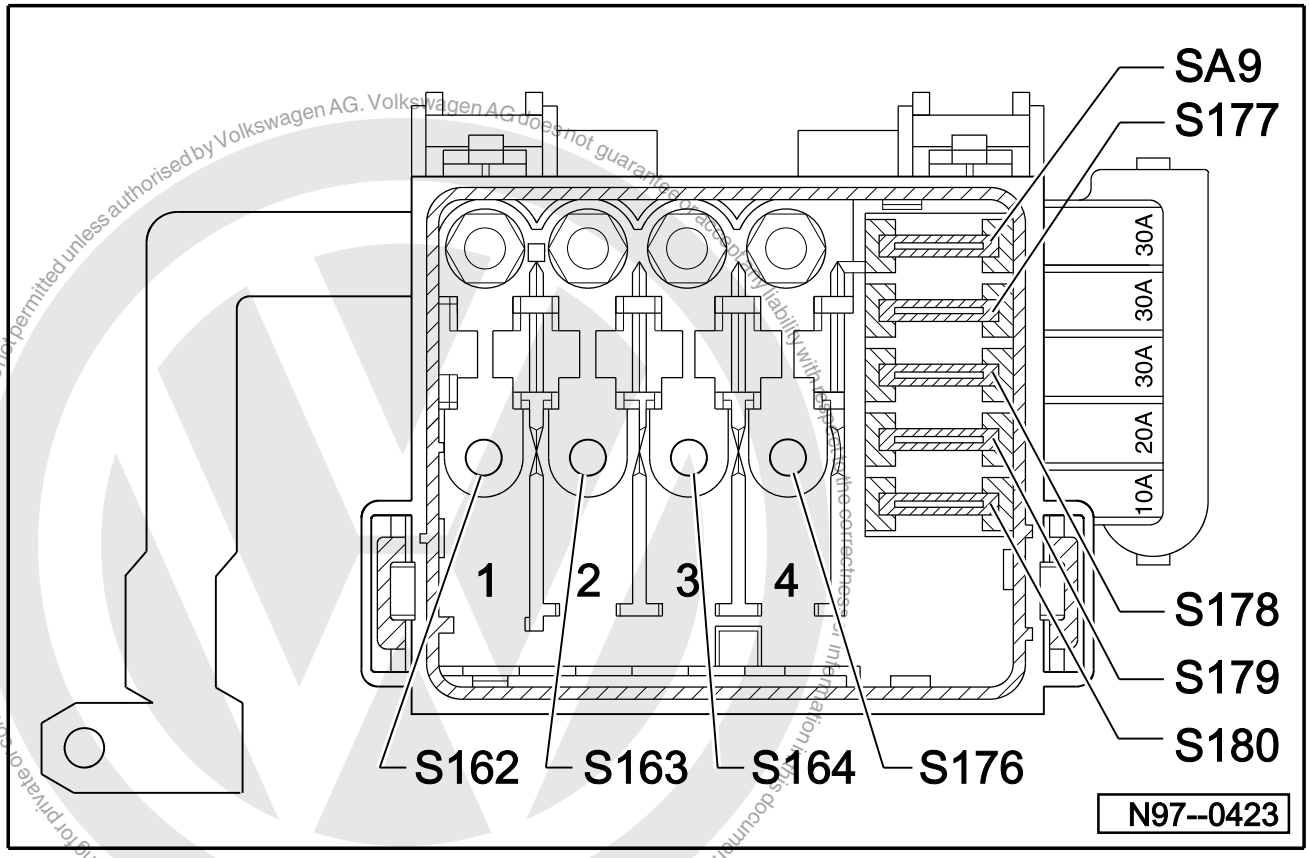

S162	-	Fuse -1- (30)	Alternator	110 A
S163	-	Fuse -2- (30)	Relay carrier	80 A
S164	-	Fuse -3- (30)	Glow plugs (engine)	50 A
S176	-	Fuse -4- (30)	Glow plugs (radiator fan)	50 A
			Air conditioning system	30 A
S177	-	Fuse -5- (30)	ABS control unit	30 A
S178	-	Fuse -6- (30)	ABS control unit	30 A
S179	-	Fuse -7- (30)	Radiator fan	20 A
S180	-	Fuse -8- (30)	Air conditioning system	10 A
SA9	-	Fuse -9- (30)	Air conditioner - glow plugs (diesel)	30 A

Protected by copyright. Copyright by Volkswagen AG.
Copying for private or commercial purposes, in part or in whole, is not permitted unless authorised by Volkswagen AG. Volkswagen AG does not guarantee or accept any liability with respect to the correctness of information in this document.
satelettronica

Coupling stations for wiring harnesses (as of October 99)

Contents

– Coupling station below relay carrier 5/2

satelettronica

Coupling station below relay carrier

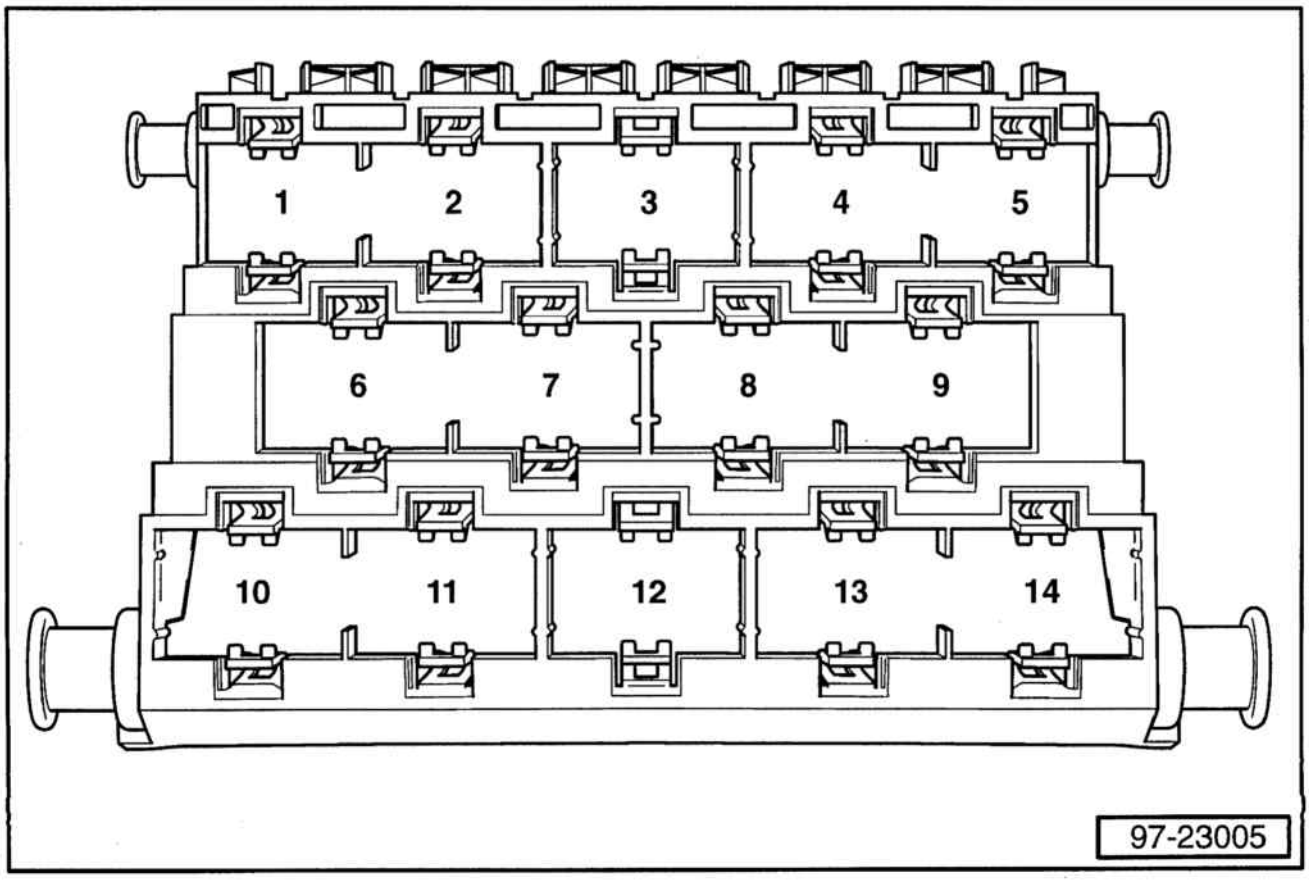

Pos.		Function	Connector designation	Connector colour
1	-	Central locking, anti-theft alarm system	T10e	Light pink
2	-	Left turn signals, left lights, self-diagnosis, headlight range control	T10c	Blue
3	-	Immobilizer, ABS, wipers	T10a	Green
4	-	Alternator warning lamp, reversing lamp, left dipped beam	T10d	Red
5	-	ACF/EGR, brake lights, horn	T10	White
6	-	CD changer	T10y	Violet
7	-	ESP	T10h	Orange
8	-	Air conditioner compressor, engine control unit	T10g	Brown
9	-	Washer pump, right turn signal, right dipped beam	T10b	Black
13	-	Can bus, oil temperature	T10s	Light green
14	-	Fuel pump (crash) relay	T10x	Yellow

satelettronica

Battery discharges.

(Voltage leakage suspected)

Test prerequisites:

Battery OK.

Possible causes of this fault are:

- Oxidised and dirty contacts
- Chafed wiring
- Internal short in assemblies.

Equipment required for fault finding:

- Multimeter V.A.G. 1526 A, Digital multimeter V.A.G. 1715 or Digital multimeter V.A.G. 1315 A
- Adapter set V.A.G 1594 A
- Valid Current flow diagram

Note:

On vehicles with a Diesel engine and door contact controlled glow plug system the glow plug system can be switched on when opening and closing the door. During the preglow period there is a high battery discharge current flow. To prevent the tester being damaged during the fault finding due to an unintentional activation of the glow plugs, remove the glow plug fuse (S164, 50A see valid current flow diagram). Before connecting the tester select the highest current setting!

Measuring battery discharge current

- Disconnect battery earth strap
- Connect Amperemeter (highest measuring range) between battery minus terminal and earth strap
- Switch off all electrical consumers in vehicle (e.g. interior lights!, radio!)
- Gradually turn Amperemeter measuring scale back until a readable value appears in the display

Current max. 25 mA	Current above 25 mA
↓ Check battery ⇒ Electrical system, Repair Group 27	↓

- Disconnect current circuits by removing fuses one after another

Current drops to max. 25 mA	Current remains above 25 mA
↓ Localise fault in relevant current circuit and rectify	↓ If after disconnecting current circuits (removing fuses) no fault is found, disconnect wire on starter -Fault find using valid Current flow diagram

END

satelettronica

Starter motor does not turn

Test prerequisites:

- Battery charged.
- Wiring connections on solenoid switch and earth strap between engine, body and battery must be tight and must not be oxidised.

Equipment required for fault finding:

- *Multimeter V.A.G 1526 A, Digital multimeter V.A.G 1715 or Digital multimeter V.A.G 1315 A*
- *Adapter set V.A.G 1594 A*
- *Valid Current flow diagram*

1 - Terminal 30 from battery
2 - Terminal 50 from ignition/starter switch
3 - Terminal 15a
4 - Connection for field winding

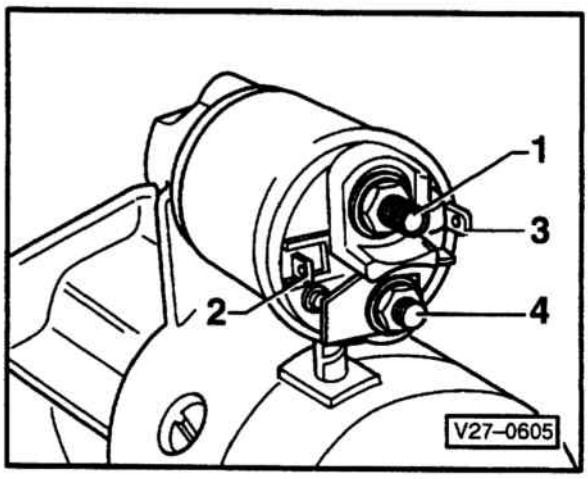

– Measure voltage at terminal 50 on solenoid switch	
Voltage present	Voltage not present or less than 8 V

– Measure voltage at field winding connection on solenoid switch	
Voltage present	Voltage not present or less than 8 V
Service starter motor	Renew solenoid switch

– Measure voltage at terminal 50 on ignition switch	
Voltage present	Voltage not present or less than 8 V
Check wiring between ignition switch and starter using Current flow diagram	Renew ignition switch

satelettronica

Starter motor turns too slowly and does not crank engine

Test prerequisites:

- V-belt tension OK.

Battery insufficiently charged or high voltage drop as a result of loose or oxidised connections	
– Check battery and charge if necessary ⇒ Electrical system, Repair Group 27	
Starter turns engine	Starter does not turn engine

↓ **End**

High voltage drop as a result of loose or oxidised connections on starter terminal 30	
– Disconnect battery earth strap at battery – Clean terminals on starter and earth strap between gearbox and body and tighten (do not loosen earth strap on body) – Connect battery earth strap	
Starter turns engine	Starter does not turn engine

↓ **End**

↓ Following causes are possible: Insufficient contact between carbon brushes and commutator or commutator scored, burnt and soiled

satelettronica

Alternator warning lamp does not go out as speed increases

Test prerequistes:

- Fuses S162 (110A) and S163 (80A) and S226 (5A) OK!
- V-belt and V-belt tension OK!
- Wiring on alternator and the earth straps between engine, body and battery must be tight and must not be oxidised

Check wire between alternator (D+) and warning lamp	
– Pull D+ wire off alternator – Switch on ignition	
Warning lamp does not light up	Warning lamp lights up
↓ Alternator or voltage regulator defective ⇒ Fault finding program No. 5	↓
– Switch off ignition – Separate multi-pin connector T10d, red, in the relay station – Switch on ignition.	
Warning lamp does not light up	Warning lamp lights up
↓ Short to earth in blue wire between alternator and T10d. Check wiring using Current flow diagram	↓ Wire from T10d to dash panel insert or dash panel insert defective

satelettronica

Checking alternator and voltage regulator with multimeter V.A.G. 1715

Note:

Before starting check, check V-belt tension, that alternator is secure, cables and battery earth strap.

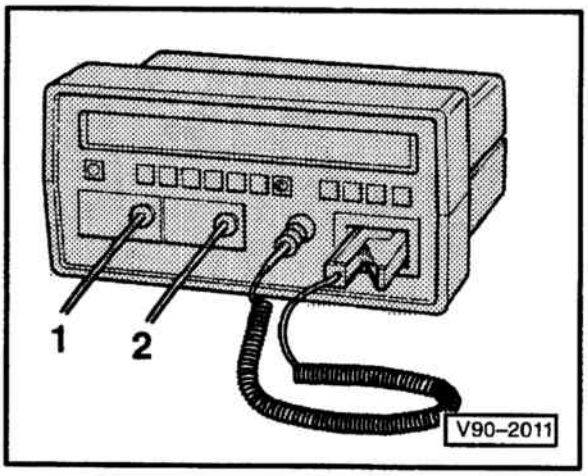

Checking alternator with multimeter V.A.G. 1715:
- Switch on multimeter
- Press button for alternator test (G)

Appears in multimeter display :
"Connect measuring cables"

- Black measuring cable (–) to battery earth strap
- Red measuring cable (+) to blue wire -D+- on alternator (use adapter set V.A.G. 1594 A)
- Start engine
- Switch on electrical consumers in vehicle (headlight main beam, heated rear window etc.)
- Run engine at 1500 to 2000 rpm for a few seconds

Test result:

If the alternator is working perfectly then "OK" appears in display
If the alternator is defective then "Not OK" appears in the display and the alternator must be repaired

satelettronica

Alternator warning lamp does not light up when ignition is switched on

Test prerequisites:

- V-belt tension and battery OK
- Wiring on alternator and earth strap between engine, body and battery must be tight and must not be oxidised

Check wire between alternator (D+) and warning lamp -K2-	
– Remove D+ wire from alternator – Place wire to earth – Switch on ignition	
Warning lamp does not light up	Warning lamp lights up

↓ Check wiring using Current flow diagram or check warning lamp -K2- in dash panel insert

↓

– Switch off ignition – Remove voltage regulator – Check carbon brushes ⇒ Electrical system, Repair group 27	
Carbon brushes not OK	Carbon brushes OK

↓ Renew carbon brushes and/or voltage regulator

↓ Renew alternator

END

satelettronica

Checking turn signals and hazard warning lights system

The test system V.A.G 1466 is required for fault finding!

Prerequisites:

- Fuses No. 21 (10A) and No. 22 (5A) are OK!
- Turn signal bulbs are OK!

Preparing for fault finding:

- Pull hazard warning lights relay J2 with control number 21 out of relay position 1
- Fit test adapter V.A.G. 1466/3 in relay position 1
- Connect V.A.G 1466 to test adapter.

Notes on test sequence:

- Perform test steps according to table.
- If the specification/test result for the test step is obtained, continue with next test step (test result OK.).
- If the specification/test result for the test step is not obtained, find fault in table and rectify.
- When checking wiring use valid current flow diagram.
- Pull the test cables out of the sockets in V.A.G 1466 after each test step.

If no fault is found after performing test steps 1 to 7, replace hazard warning lights relay J2 !

After rectifying a fault perform a functional check of the turn signal and hazard warning lights system

See next page for test table!

satelettronica

Test step	1	2	3	4
Item checked	Voltage supply (terminal 30)	Voltage supply (terminal 75x)	Turn signal switch (E2) switch position "left"	Turn signal switch (E2) switch position "right"
V.A.G 1466 socket assignment				
Red wire	from 6 to S+	from 6 to S+	from 6 to 8	from 6 to 8
Black wire	from S– to L+	from S– to L+	———	———
Blue wire	from L– to 4	from L– to 4	———	———
Additional work:	Hazard warning light switch (E3) on, ignition off	Hazard warning light switch (E3) off, ignition on	Turn signal switch (E2) switch position "left"	Turn signal switch (E2) switch position "right"
Specification/test result:	Warning lamp (L) comes on	Warning lamp (L) comes on	Left turn signal bulbs (M5), (M6), (M18) come on	Right turn signal bulbs (M7), (M8), (M19) come on
Possible causes of fault if test results differ from specification:				
Wiring relay plate/ component or component/component or component/earth	U/3 to (E3) contact 3 or Bolted connection -1- (30) via fuse 21 to (E3) contact 6 or U/2 to earth point 59	Bolted connection (75x) via fuse 22 to (E3) contact 4	U/4 to (E2) contact 49a or (E2) contact L to (M5), (M6), (M18) or (M5), (M6), (M18) to earth point 12	(E2) contact R to (M7), (M8), (M19) or (M7), (M8), (M19) to earth point 12
or turn signal switch (E2)	———	———	X	X
or hazard warning lights switch (E3)	X	X	———	———
or hazard warning lights warning lamp (K6)	———	———	———	———
or left turn signal warning lamp (K65)	———	———	———	———
or right turn signal warning lamp (K94)	———	———	———	———

Explanation of table:

X = Possible cause of fault

– = Not cause of fault

satelettronica

5	6	7	8
Turn signal warning lamp (K6)	Left turn signal warning lamp (K65)	Right turn signal warning lamp (K94)	Wiring from hazard warning switch to turn signals
from 6 to 8	from 6 to 8	from 6 to 8	from 6 to 8
———	———	———	———
———	———	———	———
Turn signal switch (E2) off, Hazard warning switch (E3) on	Hazard warning switch (E3) off, turn signal switch in switch position "left"	Hazard warning switch (E3) off, turn signal switch in switch position "right"	Hazard warning switch (E3) on
Hazard warning light warning lamp (K6) comes on	Left turn signal warning lamp (K65) comes on	Right turn signal warning lamp (K94) comes on	Turn signal bulbs come on
Possible causes of fault if test results differ from specification			
(E3) contact 5 to U/4 or (E3) contact 2 to earth point 59	(E2) contact L to dash panel insert (blue connector) contact 2 or dash panel insert (blue connector) contact 9 and contact 24 to earth point 76	(E2) contact R to dash panel insert (blue connector) contact 18	(E3) contact 7 to (M7), (M8), (M19) or (E3) contact 8 to (M5), (M6), (M18)
———	———	———	———
X	———	———	———
X	———	———	———
———	X	———	———
———	———	X	———

Explanation of table:
X = Possible cause of fault
– = Not cause of fault

satelettronica

Checking headlight range control

Note:
The following fault finding programme can be used for both headlights

Test prerequisites:

- Battery voltage OK!
- Dipped beam OK!
- 19-pin compact connector near left of radiator, correctly connected!

Check wiring (terminal 31) to the headlight range control actuating motors

- Switch ignition off
- Detach 7-pin connector behind the headlight
- Set measuring range of hand multimeter to ⊣⊢/♪
- Connect red test probe to battery negative terminal
- Connect black test probe to 7-pin connector chamber 5

Signal sounds	Signal does not sound
↓ Check (terminal 31) wiring using Current flow diagram	↓

Check (terminal 56b) wiring to the headlight range control actuating motors

- Set measuring range of hand multimeter to 20 V =
- Connect red test probe to 7-pin connector chamber 7
- Switch ignition on
- Switch on dipped beam

No voltage present	Voltage present
↓ Check (terminal 56b) wiring using Current flow diagram	↓

Check regulating voltage of actuating motors

- Connect red test probe to 7-pin connector chamber 6
- Operate headlight range control adjuster (E102)

Voltage changes	No voltage change
↓ Wiring and headlight range control adjuster (E102) OK – Renew headlight insert with headlight range control actuating motor	↓ A

satelettronica

A

Check voltage supply (terminal 56b) on the headlight range control adjuster (E102)	
– Switch ignition and lights off – Remove lighting switch (E1) with headlight range control adjuster (E102) ⇒ Workshop Manual Electrical system, Repair group 96 – Connect black test probe to body earth – Connect red test probe to headlight range control adjuster chamber 1 – Switch ignition on – Switch dipped beam lights on	
No voltage present	Voltage present

↓ Check (terminal 56b) wiring to adjuster using Current flow diagram

Check supply voltage (terminal 31) at headlight range control adjuster (E102)	
– Switch ignition and lights off – Connect black test probe to headlight range control adjuster (E102) chamber 3	
No voltage present	Voltage present

↓ Check (terminal 31) wiring from adjuster to earth point 76 using Current flow diagram

Check regulating voltage for actuating motors at headlight range control adjuster (E102)	
– Connect red test probe to headlight range control adjuster (E102) chamber 2 – Operate headlight range control adjuster (E102)	
No voltage change	Voltage changes

↓ Renew lighting switch with headlight range control adjuster (E102)

↓ Headlight range control adjuster (E102) OK
– Check wiring from headlight range control adjuster (E102) to the actuating motors

END

satelettronica

Checking heated driver's seat

The following is required for fault finding:

- *Test system V.A.G 1466*
- *Hand multimeter V.A.G 1526 A*
- *Adapter set V.A.G 1594 A*
- *Valid current flow diagram*

Prerequisites:

- Fuse No. 11 (15 A) OK!

Preparing for fault finding:

- Switch seat heating off.
- Pull driver's seat heating control unit (J131) marked with control number 59 out of relay carrier under driver's seat.
- Fit test adapter V.A.G. 1466/3 in relay carrier.
- Connect V.A.G 1466 to test adapter.

Notes on test sequence:

- Perform test steps according to table.
- If the specification/test result for the test step is obtained, continue with next test step (test result OK.).
- If the specification/test result for the test step is not obtained, find fault in table and rectify.
- When checking wiring use valid current flow diagram.
- Pull the test cables out of the sockets in V.A.G 1466 after each test step.

If no fault is found after performing test steps 1 to 6, replace heated driver's seat control unit (J131) !

After rectifying a fault perform a functional check of the driver's seat heating

See next page for test table!

satelettronica

Test step	1	2	3	4
Item checked	Voltage supply (terminal 15)	Switch on and switch off function of heated driver's seat adjuster (E94)	Regulating function of heated driver's seat adjuster (E94)	Driver's seat temperature sensor (G59)
V.A.G 1466 socket assignment				
Red wire	from 8 to S+	from 5 to S+	———	from 8 to D+
Black wire	from S– to L+	from S– to L+	———	from D– to 4
Blue wire	from L– to 7	from L– to 7	———	———
Hand multimeter V.A.G 1526 A:	———	———	Between 6 and 5	———
Additional work:	Switch ignition on	Switch on heated driver's seat adjuster (E94)	Switch ignition off, set hand multimeter selector switch to 2 kΩ, operate heated driver's seat adjuster (E94)	Switch ignition on
Specification/test result:	Warning lamp (L) comes on	Warning lamp (L) comes on	Resistance value from 0 Ω (min.) to 550 Ω (max.)	LED (D) comes on
Possible causes of fault if test results differ from specification:				
Wiring relay plate/ component or component/component or component/earth	Ign./starter switch contact 15 to (J131) contact 8 or (J131) contact 7 to earth point 59	Ign./starter switch contact 15 to (E94) contact 4 or (E94) contact 2 to (J131) contact 5	(E94) contact 1 to (J131) contact 6	(J131) contact 4 to (G59) or (G59) to earth point 59
or heated driver's seat adjuster (E94)	———	X	X	———
or heated driver' seat (Z6) and heated driver's backrest (Z7)	———	———	———	———
or driver's seat temperature sensor (G59)	———	———	———	X

Explanation of table:
X = Possible cause of fault
– = Not cause of fault

satelettronica

5	6
Heated driver's seat (Z6) and heated driver's backrest (Z7) – continuity check	Heated driver's seat (Z6) and heated driver's backrest (Z7) – resistance check
from 8 to S+	———
from S– to L+	———
from L– to 2	———
———	Between 7 and 2 (without V.A.G 1466)
Switch ignition on	Switch ignition off, pull test adapter V.A.G 1466/6 off relay socket and connect hand multimeter directly to relay socket (use adapter set), set hand multimeter range selector switch to 200 Ω
Warning lamp (L) comes on	Resistance value app. 2 Ω (heater element cold)
(J131) contact 2 to (Z6) or (Z6) to (Z7) or (Z7) to earth point 59	(J131) contact 2 to (Z6) or (Z6) to (Z7) or (Z7) to earth point 59
———	———
X	X
———	———

Explanation of table:
X = Possible cause of fault
– = Not cause of fault

satelettronica

Checking heated front passenger's seat

The following is required for fault finding:

- *Test system V.A.G 1466*
- *Hand multimeter V.A.G 1526 A*
- *Adapter set V.A.G 1594 A*
- *Valid current flow diagram*

Prerequisites:

- Fuse No. 11 (15 A) OK!

Preparing for fault finding:

- Switch seat heating off.
- Pull front passenger's seat heating control unit (J132) marked with control number 59 out of relay carrier under front passenger's seat.
- Fit test adapter V.A.G. 1466/3 in relay carrier.
- Connect V.A.G 1466 to test adapter.

Notes on test sequence:

- Perform test steps according to table.
- If the specification/test result for the test step is obtained, continue with next test step (test result OK.).
- If the specification/test result for the test step is not obtained, find fault in table and rectify.
- When checking wiring use valid current flow diagram.
- Pull the test cables out of the sockets in V.A.G 1466 after each test step.

If no fault is found after performing test steps 1 to 6, replace heated front passenger's seat control unit (J132) !

After rectifying a fault perform a functional check of the front passenger's seat heating

See next page for test table!

satelettronica

Test step	1	2	3	4
Item checked	Voltage supply (terminal 15)	Switch on and switch off function of heated front passenger's seat adjuster (E95)	Regulating function of heated front passenger's seat adjuster (E94)	Front passenger's seat temperature sensor (G60)
V.A.G 1466 socket assignment				
Red wire	from 8 to S+	from 5 to S+	———	from 8 to D+
Black wire	from S– to L+	from S– to L+	———	from D– to 4
Blue wire	from L– to 7	from L– to 7	———	———
Hand multimeter V.A.G 1526 A:	———	———	Between 6 and 5	———
Additional work:	Switch ignition on	Switch on heated front passenger's seat adjuster (E95)	Switch ignition off, set hand multimeter selector switch to 2 kΩ, operate heated front passenger's seat adjuster (E95)	Switch ignition on
Specification/test result:	Warning lamp (L) comes on	Warning lamp (L) comes on	Resistance value from 0 Ω (min.) to 550 Ω (max.)	LED (D) comes on
Possible causes of fault if test results differ from specification:				
Wiring relay plate/ component or component/component or component/earth	Ign./starter switch contact 15 to (J132) contact 8 or (J132) contact 7 to earth point 59	Ign./starter switch contact 15 to (E95) contact 4 or (E95) contact 6 to (J132) contact 5	(E95) contact 7 to (J132) contact 6	(J132) contact 4 to (G60) or (G60) to earth point 59
or heated front passenger's seat adjuster (E95)	———	X	X	———
or heated front passenger's seat (Z8) and heated front passenger's backrest (Z9)	———	———	———	———
or front passenger's seat temperature sensor (G60)	———	———	———	X

Explanation of table:
X = Possible cause of fault
– = Not cause of fault

satelettronica

5	6
Heated front passenger's seat (Z8) and heated front passenger's backrest (Z9) – continuity check	Heated front passenger's seat (Z8) and heated front passenger's backrest (Z9) – resistance check
from 8 to S+	———
from S– to L+	———
from L– to 2	———
———	Between 7 and 2 (without V.A.G 1466)
Switch ignition on	Switch ignition off, pull test adapter V.A.G 1466/6 off relay socket and connect hand multimeter directly to relay socket (use adapter set), set hand multimeter range selector switch to 200 Ω
Warning lamp (L) comes on	Resistance value app. 2 Ω (heater element cold)
(J132) contact 2 to (Z8) or (Z8) to (Z9) or (Z9) to earth point 59	(J132) contact 2 to (Z8) or (Z8) to (Z9) or (Z9) to earth point 59
———	———
X	X
———	———

Explanation of table:
X = Possible cause of fault
– = Not cause of fault

satelettronica

Checking folding sliding roof

Note:
If the vehicle is also fitted with electric windows, the folding sliding roof relay (J72) is use to activate the electric windows as well.

The following is required for fault finding:

- *Hand multimeter V.A.G 1526 A*
- *Adapter set V.A.G 1594 A*
- *Valid current flow diagram*

Test prerequisites:

- Battery voltage OK!
- Folding sliding roof thermo fuse (S83, 20A) OK!
- Fuse No. 229 (5 A), on the relay plate OK!
- Folding sliding roof mechanically OK!

Check voltage supply terminal 30 and 31 to folding sliding roof relay (J72)	
– Pull folding sliding roof relay (J72) out of relay carrier near relay plate – Switch ignition on – Set measuring range switch of hand multimeter V.A.G 1526 to 20 V direct voltage – Connect red test probe (+) to relay carrier chamber 6 – Connect black test probe (–) to relay carrier chamber 4	
No voltage present	Approx. battery voltage

↓ Check wiring using Current flow diagram

Check voltage supply terminals 30 and 31 to folding sliding roof switch (E142)	
– Insert folding sliding roof relay (J72) into appropriate relay location near relay plate – Pull 6-pin connector off folding sliding roof switch (E142) – Connect red test probe (+) to to 6-pin connector chamber 5 – Connect black test probe (–) to 6-pin connector chamber 4	
No voltage present	Approx. battery voltage

↓ Check wiring using Current flow diagram and/or replace folding sliding roof relay (J72)

↓ **A**

satelettronica

A

Check voltage supply terminal 30 to folding sliding roof switch (E142)	
– Connect red test probe (+) to 6-pin connector chamber 3 – Connect black test probe (–) to 6-pin connector chamber 4	
No voltage present	Voltage present

Check wiring using Current flow diagram

Check folding sliding roof switch (E142)	
– Attach 6-pin connector to folding sliding roof switch (E142) and lock in place – Pull 2-pin connector off folding sliding roof motor (V86) – Connect red test probe (+) to 2-pin connector chamber 2 – Connect black test probe (–) to 2-pin connector chamber 1 – Carry out voltage measurement according to table:	
Position of folding sliding roof switch (E142):	Specification/result:
Not operated	0 Volt
"Slide closed"	Approx. battery voltage
"Slide open"	Approx. battery voltage
Specification not obtained	Specification obtained

Check wiring using Current flow diagram and/or renew folding sliding roof switch (E142)

Renew folding sliding roof motor (V86)

satelettronica

Checking electric windows

Notes:

- *This fault finding programme can be used for both the left and right electric windows!*
- *For the pin assignment for the 18-pin connector, on the lower left/right A pillars ⇒ "Fitting locations"*

The following is required for fault finding:

- *Hand multimeter V.A.G 1526*
- *Adapter set V.A.G 1594 A*
- *Valid current flow diagram*
- *Workshop Manual General body repairs*

Test prerequisites:

- Battery voltage OK!
- Electric windows thermo fuse (S43, 20A) OK!
- Fuse No. 229 (5 A), on the relay plate OK!
- Electric windows mechanically OK!

Check voltage supply terminal 30 and 31 to electric windows relay (J51)	
– Pull electric windows relay (J51) out of relay carrier near relay plate – Switch ignition on – Set measuring range switch of hand multimeter V.A.G 1526 to 20 V direct voltage – Connect red test probe (+) to relay carrier chamber 6 – Connect black test probe (–) to relay carrier chamber 4	
No voltage present	Approx. battery voltage

↓ Check wiring using Current flow diagram

Check voltage supply terminals 30 and 31 to switch for electric windows (E40/E41)	
– Insert electric windows relay (J51) into appropriate relay location near relay plate – Pull 6-pin connector off switch for electric windows (E40/41) – Connect red test probe (+) to to 6-pin connector chamber 5 – Connect black test probe (–) to 6-pin connector chamber 4	
No voltage present	Approx. battery voltage

↓ Check wiring using Current flow diagram and/or replace relay for elecric windows (J51)

↓ **A**

satelettronica

A

Check voltage supply terminal 30 to switch for electric window (E40/E41)	
– Connect red test probe (+) to 6-pin connector chamber 3 – Connect black test probe (–) to 6-pin connector chamber 4	
No voltage present	Approx. battery voltage

Check wiring using Current flow diagram

Check switch for electric window (E40/E41)	
– Attach 6-pin connector to switch for electric window (E40/E41) and lock in place – Detach 18-pin connector on the lower left/right A pillar – Connect red test probe (+) to 18-pin connector (A pillar) chamber 15 – Connect black test probe (–) to 18-pin connector (A pillar) chamber 14 – Carry out voltage measurement according to table:	
Position of switch for electric window (E40/41):	Specification/result:
Not operated	0 Volt
"Close window"	Approx. battery voltage
"Open window"	Approx. battery voltage
Specification not obtained	Specification obtained

Check wiring using Current flow diagram and/or renew switch for electric window (E40/41)

Check wiring harness to electric window motor (in the door) / renew electric window motor (V14/V15)

satelettronica

Checking headlight washer system

The following is required for fault finding:

- *Test system V.A.G 1466*
- *Hand multimeter V.A.G 1526 A*
- *Adapter set V.A.G 1594 A*
- *Valid current flow diagram*

Prerequisites:

- Fuse No. 163 (80 A) OK!

Preparing for fault finding:

- Pull relay for headlight washer system (J39) marked with control number 33 out of relay plate.

Notes on test sequence:

- Perform test steps according to table.
- If the specification/test result for the test step is obtained, continue with next test step (test result OK.).
- If the specification/test result for the test step is not obtained, find fault in table and rectify.
- When checking wiring use valid current flow diagram.
- Pull the test cables out of the sockets in V.A.G 1466 after each test step.

If no fault is found after performing test steps 1 to 4, replace headlight washer system relay (J39) !

After rectifying a fault perform a functional check of the headlight washer system

See next page for test table!

satelettronica

Test step	1	2	3	4
Item checked	Lighting switch (E1) voltage supply terminal 56	Voltage supply terminal 30	Windscreen washer switch (E22)	Windscreen washer system pump (V11)
V.A.G 1466 socket assignment				
Red wire	———	from 8 to S+	from 4 to S+	from 8 to 2
Black wire	———	from S– to L+	from S– to L+	———
Blue wire	———	from L– to 6	from L– to 6	———
Hand multimeter V.A.G 1526 A:	Between 6 and 5 (without V.A.G 1466)	———	———	———
Additional work:	Set hand multimeter range selection switch to 20 V direct voltage and connect to relay socket (use adapter set), switch ignition on, lighting switch (E1) to main or dipped beam	Remove hand multimeter from relay position 7, connect test adapter V.A.G 1466/3 and connect tester V.A.G 1466	Pull windscreen washer switch (E22)	**Warning! Do not bridge sockets for longer than 2 seconds!**
Specification/test result:	Approx. battery voltage	Warning lamp (L) comes on	Warning lamp (L) comes on	(V11) runs
Possible causes of fault if test results differ from specification:				
Wiring relay plate/ component	Relay socket chamber 5 to (E1) or relay socket chamber 6 to earth point 12	Relay socket chamber 8 to fuse 163	Relay socket chamber 4 to (E22) or bolted connection (75x) via fuse 223 to (E22)	B/6 to (V11) or (V11) to earth point 12
or lighting switch (E1)	X	———	———	———
or windscreen washer switch (E22)	———	———	X	———
or windscreen washer pump (V11)	———	———	———	X

Explanation of table:
X = Possible cause of fault
– = Not cause of fault

satelettronica

Checking radio system

Contents:

- Radio not functioning 14/2
- FM (UKW) reception distorted, poor or intermittent 14/2
- Checking roof aerial 14/3
- One or more loudspeakers not functioning 14/4
- Anti-theft coding LED not flashing when radio is switched off 14/5
- Cassette reproduction muted or distorted 14/5
- Auto-reverse continually switches back and forth or switches too early 14/6

The following equipment is required for fault finding:

- *Multimeter V.A.G 1526*
- *Adapter set V.A.G 1594 A*
- *Valid Current Flow Diagram*
- *Spare aerial*
- *Relevant radio instruction manual*

satelettronica

Radio not functioning

Test prerequisites:

Fuse S228 OK!

Check battery voltage

- Pull radio out of mounting frame ⇒ Electrical system, Repair group 91
- Pull black 8-pin connector (current supply) off radio
- Set multimeter range selector switch to 20 Volt =
- Connect black test probe to 8-pin connector, chamber 8
- Connect red test probe to 8-pin connector, chamber 7

No voltage present	Voltage present
↓ Check wiring to radio using Current flow diagram	↓

Check fuse on back of radio

- Pull fuse out of radio
- Set range selector switch of multimeter V.A.G 1526 to ⊣◄/♪
- Check fuse for continuity

Signal sounds	Signal does not sound
↓ Replace radio	↓ Replace fuse on radio

FM (UKW) reception distorted, poor or intermittent

Test prerequisites:

- *FM button pressed*
- *Set to station with good reception*
- *Roof aerial fitted*
- *Reception conditions good (i.e. not in a building)*

Check radio

- Pull radio out of mounting frame ⇒ Radio, Electrical system, Repair group 91
- Connect spare aerial

Reception not OK	Reception OK
↓ Replace radio	↓ Check roof aerial ⇒ No. 14/3

satelettronica

Checking roof aerial

Test prerequisite:

- The radio fitted conforms to the new radio generation from model year 1994

Check aerial amplifier voltage supply

- Switch off radio
- Pull radio out of mounting frame ⇒ Electrical system, Repair group 91.
- Pull aerial wire out of radio
- Set instrument tester V.A.G 1301 potentiometer to 490 on scale
- Connect V.A.G 1301 leads to aerial socket centre conductor and earth on radio (use adapter set V.A.G 1594 A)
- Set hand multimeter V.A.G 1526 range selector switch to 20V =
- Connect red test probe to aerial socket centre conductor
- Connect black test probe to aerial socket earth
- Switch on radio

No voltage present	Approx. battery voltage
↓ Renew radio	↓

Check aerial cable from radio to roof aerial for short

- Switch off radio
- Remove left and right C pillar trim and lower moulded headlining in area of roof aerial ⇒ General body repairs, Repair group 70
- Pull aerial connector off roof aerial
- Set hand multimeter V.A.G 1526 range selector switch to ⊣⊢/♪
- Connect red test probe to aerial connector centre conductor
- Connect black test probe to aerial connector screening (earth) (use adapter set V.A.G 1594 A)

Signal sounds	Signal does not sound
↓ Centre conductor and screening short circuit, renew aerial cable.	↓

Check aerial cable to roof aerial for open circuit

- Connect aerial cable to radio
- Set hand multimeter V.A.G 1526 range selector switch to 20 V =
- Connect red test probe to aerial cable centre conductor, behind headlining
- Connect black test probe to aerial cable screening (earth) (use adapter set V.A.G 1594 A)

No voltage present	Approx. battery voltage
↓ Aerial cable has open circuit – Check single connector on lower left A pillar and /or renew aerial cable	↓ Renew roof aerial

satelettronica

One or more loudspeakers not functioning

Test prerequisites:

- *Loudspeaker connectors correctly fitted to radio*

Checking loudspeaker system

- Pull radio out of mounting frame ⇒ Electrical system, Repair group 91.
- Pull brown 8-pin connector (loudspeaker) of radio
- Set hand multimeter V.A.G 1526 range selector switch to 200 Ω
- Connect test probes ⇒ table below

Measured value > 4 Ω.	Measured value < 4 Ω.

Check loudspeaker system for wiring open circuit

- Pull connector off loudspeaker ⇒ Electrical system, Repair group 91
- Connect test probes to loudspeaker connections

Measured value 2.5 ... 3 Ω	Measured value > 3 Ω
Check wiring to loudspeaker for open circuit using Current flow diagram	Replace loudspeaker

Check loudspeaker for short

- Pull connector off loudspeaker ⇒ Electrical system Repair group 91
- Connect test probes to loudspeaker connections

Measured value 2.5 ... 3 Ω	Measured value < 2.5 Ω
Check wiring to loudspeakers for open circuit using Current flow diagram	Replace loudspeaker

Connections on brown 8-pin connector (loudspeaker)

Test probes	Front left loudspeaker	Front right loudspeaker	Rear left loudspeaker	Rear right loudspeaker
Red	Chamber 5	Chamber 3	Chamber 7	Chamber 1
Black	Chamber 6	Chamber 4	Chamber 8	Chamber 2

satelettronica

LED for anti-theft coding not flashing when radio is switched off

Check radio coding

- Switch on radio
- Press buttons TA and TP simultaneously and hold

"SAFE" appears in display and then "1000"	"CODE" appears in display and then "1000"
↓ Replace radio	↓

Enter code number

- Enter code number using station buttons
- Press buttons TA and TP simultaneously until "SAFE" appears and then a frequency
- Remove ignition key or switch radio off

LED flashes	LED does not flash
↓ Radio OK	↓ Replace radio

Cassette reproduction muted or distorted

Test prerequisites:

- Radio performance OK!

Check cassette operation

- Play a different cassette for comparison

Sound OK	Sound not OK
↓ Use functional cassettes and inform customer of the tips listed in the instruction manual for operating the cassette system	↓

Cleaning sound system head

- Clean sound head with a cleaning cassette

Sound OK	Sound not OK
↓ Inform customer of the tips listed in the instruction manual for operating the cassette system	↓ Replace radio

satelettronica

Auto-reverse continually switches back and forth or switches too early

Check cassette operation	
– Play a free running and functional comparison cassette	
Continues to switch uncontrollably	No longer switches uncontrollably
↓	↓
Replace radio	Use functional cassettes and inform customer of the tips listed in the instruction manual for operating the cassette system

satelettronica

Checking central locking
(Without safe function)

Notes:

- *If the vehicle is equipped with the single door opening function, the wire to chamber 8 of the 12-pin connector for pump with control unit (V69) must be disconnected (cut). The pump with control unit (V69) is located in the luggage compartment, right behind the cover.*
- *If the front left central locking actuating element (F131) does not lock or unlock, check whether the vacuum pump operates for longer than 5 secs. and then after a brief pause pumps again. If this is the case, there is a leak which must first be rectified!*

The following is required for fault finding:

- *Hand multimeter V.A.G 1526 or V.A.G 1526 A*
- *Adapter set V.A.G 1594 A*
- *Valid current flow diagram*

Test prerequisites:

- Fuse No. 228 (15 A) OK!
- 18-pin connector in the A pillars, correctly connected!
- Central locking vacuum pipes, correctly connected and OK!

Check terminal 30 and terminal 31 voltage supply	
– Pull 12-pin connector off the pump with control unit (V69) – Set hand multimeter range selector switch to 20 V = – Connect red test probe (+) to 12-pin connector, chamber 1 – Connect black test probe (–) to 12-pin connector, chamber 3	
No voltage present	Approx. battery voltage

↓ Check terminal 30 and terminal 31 wiring using Current flow diagram

↓

Check central locking switch (F59 / F114) in door lock ("open" position)	
– Connect red test probe (+) to to 12-pin connector, chamber 7 – Connect black test probe (–) to 12-pin connector, chamber 3 – Hold door lock in driver's / front passenger's door in the "open" position with the vehicle key	
No voltage present	Voltage present

↓ Check wiring using Current flow diagram and/or central locking switch (F59 / F114) defective

↓

A

satelettronica

A

Check central locking switch (F59 / F114) in door lock ("open" position)	
– Connect red test probe (+) to to 12-pin connector, chamber 10 – Connect black test probe (–) to to 12-pin connector, chamber 3 – Hold door lock in driver's / front passenger's door in the "open" position with the vehicle key	
No voltage present	Voltage present

No voltage present → Check wiring using Current flow diagram and/or central locking switch (F59 / F114) defective

Voltage present →

Check central locking actuating element (F131) in "driver's door unlocked" position	
– Unlock driver's door – Connect red test probe (+) to to 12-pin connector, chamber 4 – Connect black test probe (–) to to 12-pin connector, chamber 3	
No voltage present	Voltage present

No voltage present → Check wiring using Current flow diagram and/or central locking actuating element (F131) defective

Voltage present →

Check central locking actuating element (F131) in "driver's door locked" position	
– Lock driver's door – Set hand multimeter V.A.G 1526 range selector switch to ⊣◀/♪ – Connect red test probe (+) to to 12-pin connector, chamber 4 – Connect black test probe (–) to to 12-pin connector, chamber 3	
Signal does not sound	Signal sounds

Signal does not sound → Check wiring using Current flow diagram and/or front left central locking actuating element (F131) defective

Signal sounds → Replace pump with central locking control unit (V69)

satelettronica

Checking windscreen wipe and wash system

Equipment required for fault finding!

- *Test system V.A.G 1466*

Test prerequisites:

- Fuse No. 223 (15A) OK.!
- Windscreen wipers in rest position!

Preparing for fault finding:

- Pull intermittent wash/wipe relay J31 production number 19 out of relay position 2.
- Pull rear window wash/wipe relay J30 production number 72 out of relay position.
- Fit test adapter V.A.G 1466/5 to relay position 2.
- Connect V.A.G 1466 to test adapter.
- Switch on ignition.

Notes on test procedure:

- Perform test steps as per table.
- If the specification/test result is obtained, continue with next test step (test result OK.).
- If the specification/test result is not obtained, locate fault using table and rectify.
- Use valid current flow diagram when checking wiring.
- Pull test cables out of V.A.G 1466 sockets after each test step.

If the fault has not been found after completing test steps 1 to 8, renew the intermittent wash/wipe relay J31!

Perform a functional test of the windscreen wash/wipe system after rectifying faults.

The test table is begins on the next page!

satelettronica

Test step:	1	2	3	4
Tested:	Voltage supply (terminal 75x)	Windscreen wiper switch (E22) "Wash operation"	Windscreen washer pump (V59)	Windscreen wiper switch (E22) "Intermittent operation"
V.A.G 1466 socket assignment				
Red wire	from 8 to S+	from 6 to S+	———	from 1 to S+
Black wire	from S– to L+	from S– to L+	———	from S– to L+
Blue wire	from L– to 4	from L– to 4	———	from L– to 4
Additional work:	———	"Pull" windscreen wiper switch (E22)	"Pull" windscreen wiper switch (E22)	Windscreen wiper switch (E22) at "intermittent operation"
Specification/test result:	Warning lamp (L) lights up	Warning lamp (L) lights up	Windscreen washer pump (V59) runs	Warning lamp (L) lights up
Possible fault causes for deviations from specification/test result:				
or windscreen wiper switch (E22)	———	X	X	X
or windscreen washer pump (V59)	———	———	X	———
or windscreen wiper motor (V)	———	———	———	———
Wiring from relay plate/component or component/component or component/earth	U/5 via fuse 223 to bolted connection (75x) or U/8 to earth point 59	U/6 to (E22) or (E22) to fuse 223	U/6 to (V59) or (E22) to (V59) or (E22) to earth point 76	U/10 to (E22)

Explanation of table:
X = possible cause of fault
– = not cause of fault

satelettronica

5	6	7	8
Windscreen wiper switch (E22) at "1st wiper speed"	Windscreen wiper motor (V)	Windscreen wiper motor (V) "rest position"	Windscreen wiper switch (E22) "2nd wiper speed"
from 5 to S+	from 5 to 2	from 5 to 2	———
from S– to L+	———	———	———
from L– to 4	———	———	———
Windscreen wiper switch (E22) at "1st wiper speed"	Windscreen wiper switch (E22) at "1st wiper speed"	Windscreen wiper switch (E22) at "OFF" position	Windscreen wiper switch (E22) at "2nd wiper speed"
Warning lamp (L) lights up	Windscreen wiper motor (V) runs	Windscreen wiper motor (V) stops at end position	Windscreen wiper motor (V) runs fast
Possible fault causes for deviations from specification/test result:			
X	———	X	X
———	———	———	———
———	X	X	X
U/7 to (E22)	U/9 to (V) terminal 53 or (V) terminal 31 to earth point 12	Fuse 223 to (V) terminal 53a or (V) terminal 53e to (E22)	(V) terminal 53b to (E22)

Explanation of table:
X = possible cause of fault
– = not cause of fault

satelettronica

Checking rear window wipe and wash system

Equipment required for fault finding!

- *Test system V.A.G 1466*

Test prerequisites:

- Fuses No. 224 (10A) and No. 223 (15A) OK.!
- Rear window wiper in rest position!

Preparing for fault finding:

- Pull rear window wash/wipe relay J30 production number 72 out of relay position.
- Pull intermittent wash/wipe relay J31 production number 19 out of relay position 2.
- Fit test adapter V.A.G 1466/3 to relay position for rear window wash/wipe system.
- Switch on ignition.

Notes on test procedure:

- Perform test steps as per table.
- If the specification/test result is obtained, continue with next test step (test result OK.).
- If the specification/test result is not obtained, locate fault using table and rectify.
- Use valid current flow diagram when checking wiring.
- Pull test cables out of V.A.G 1466 sockets after each test step.

If the fault has not been found after completing test steps 1 to 5, renew the rear window wash/wipe relay J30 !

Perform a functional test of the rear window wash/wipe system after rectifying faults.

The test table is begins on the next page!

satelettronica

Test step:	1	2	3	4
Tested:	Voltage supply (terminal 75x)	Windscreen wiper switch (E22) "Wash operation rear window"	Windscreen and rear window washer pump (V59)	Rear window wiper motor (V12)
V.A.G 1466 socket assignment				
Red wire	from 8 to S+	from 6 to S+	———	from 8 to 2
Black wire	from S– to L+	from S– to L+	———	———
Blue wire	from L– to 4	from L– to 4	———	———
Additional work:	———	"Press" windscreen wiper switch (E22)	"Press" windscreen wiper switch (E22)	"Press" windscreen wiper switch (E22)
Specification/test result:	Warning lamp (L) lights up	Warning lamp (L) lights up	Windscreen and rear window washer pump (V59) runs	Rear window wiper motor (V12) runs
Possible fault causes for deviations from specification/test result:				
Windscreen wiper switch (E22)	———	X	X	———
or windscreen and rear window washer pump (V59)	———	———	X	———
or rear window wiper motor (V12)	———	———	———	X
or Wiring from relay plate/component or component/component or component/earth	Bolted connection (75x) via fuse 224 to chamber 8 or chamber 4 to earth point 76	(E22) to chamber 6 or (E22) via fuse 223 to bolted connection (75x)	(E34) to chamber 6 or (E34) to earth point 76 or U/6 to (E22) or U/6 to (V59) or (E22) to (V59)	Chamber 2 to (V12) terminal 53 or (V12) terminal 31 to earth point 59

Explanation of table:
X = possible cause of fault
– = not cause of fault

satelettronica

5
Rear window wiper motor (V12) "end position"
from 8 to 2
—
—
With rear window wiper running pull off red wire again
Rear window wiper motor stops in end position
—
—
X
V12 terminal 53a to fuse 224

Explanation of table:
X = possible cause of fault
– = not cause of fault

satelettronica

Checking fog lights

Contents:

- Both fog lights not functioning 18/2
- One fog light not functioning 18/5

The following equipment is required for fault finding:

- *Multimeter V.A.G 1526 or V.A.G 1526 A*
- *Adapter set V.A.G 1594 A*
- *Valid Current Flow Diagram*

Always ensure that the battery negative terminal is tight before starting fault finding.

Test prerequisites:

- Battery voltage OK
- Fuse SB43 (15A) in fuse holder OK!
- Relief relay for X contact (J59) functioning OK!
- Fog light bulbs (L22 and L23) OK!

Preparing for fault finding:

- Ignition and all electrical consumers switched off.
- Remove lighting switch ⇒ Electrical system, Repair group 69 (only necessary when both fog lights do not function!)

Perform a functional test of the fog lights after rectifying faults.

The fault finding programme begins on the next page!

satelettronica

Both fog lights not functioning

Check fog light voltage supply (terminal 75x)

- Set measuring range selector switch of multimeter V.A.G 1526 A to 20 Volt =
- Pull connector off lighting switch
- Connect red test probe (+) to chamber 2 (83)of connector
- Connect black test probe (–) to body earth
- Switch on ignition

Voltage not OK	Voltage OK
↓ Check positive side of wiring using Current flow diagram	↓

Check lighting switch (E1) (function of fog lights without rear fog lights)

- Set measuring range selector switch of multimeter V.A.G 1526 A to 20 Volt =
- Attach connector to lighting switch
- Connect red test probe (+) to chamber 8 (NL) of lighting switch connector
- Connect black test probe (–) to body earth
- Switch on ignition
- Switch on fog lights, but not the rear fog lights

Voltage not OK	Voltage OK
↓ Renew lighting switch (E1)	↓

Check lighting switch (E1) (function of fog lights with rear fog lights)

- Set measuring range selector switch of multimeter V.A.G 1526 A to 20 Volt =
- Connect red test probe (+) to chamber 8 (NL) of lighting switch connector
- Connect black test probe (–) to body earth
- Switch on ignition
- Switch on fog lights with rear fog lights

Voltage not OK	Voltage OK
↓ Renew lighting switch (E1)	↓ A

satelettronica

A

Check wiring from lighting switch (E1) to left fog light (L22)

- Set measuring range selector switch of multimeter V.A.G 1526 A to 20 Volt =
- Pull 2-pin connector T2 off left fog light (L22)
- Connect red test probe (+) to chamber 1 of 2-pin connector T2
- Connect black test probe (–) to body earth
- Switch on ignition
- Switch on fog lights

Voltage not OK	Voltage OK

Voltage not OK → Check wiring between 2-pin connector T2 and lighting switch (E1) using Current flow diagram

Voltage OK →

Check left fog light (L22) earth connection

- Set measuring range selector switch of multimeter V.A.G 1526 A to 20 Volt =
- Connect red test probe (+) to chamber 1 of 2-pin connector T2
- Connect black test probe (–) to chamber 2 of 2-pin connector T2
- Switch on ignition
- Switch on fog lights

Voltage not OK	Voltage OK

Voltage not OK → Check wiring from left fog light (L22) to earth

Voltage OK →

Check wiring from lighting switch (E1) to right fog light (L23)

- Set measuring range selector switch of multimeter V.A.G 1526 A to 20 Volt =
- Pull 2-pin connector T2 off right fog light (L23)
- Connect red test probe (+) to chamber 1 of 2-pin connector T2
- Connect black test probe (–) to body earth
- Switch on ignition
- Switch on fog lights

Voltage not OK	Voltage OK

Voltage not OK → Check wiring between 2-pin connector T2 and lighting switch (E1) using Current flow diagram

Voltage OK → B

satelettronica

B

Check left fog light (L23) earth connection	
– Set measuring range selector switch of multimeter V.A.G 1526 A to 20 Volt = – Connect red test probe (+) to chamber 1 of 2-pin connector T2 – Connect black test probe (–) to chamber 2 of 2-pin connector T2 – Switch on ignition – Switch on fog lights	
Voltage not OK	Voltage OK

Check wiring from left fog light (L23) to earth

END

satelettronica

One fog light not functioning

Note:

In this fault finding programme you only check the circuit for the fog light which is not functioning. Therefore the designations "left" and "right" fog lights are not used

Check wiring from lighting switch (E1) to defective fog light

- Set measuring range selector switch of multimeter V.A.G 1526 A to 20 Volt =
- Pull 2-pin connector T2 off defective fog light
- Connect red test probe (+) to chamber 1 of connector T2
- Connect black test probe (–) to body earth
- Switch on ignition
- Switch on fog lights

Voltage not OK	Voltage OK

Voltage not OK → Check wiring between defective fog light 2-pin connector T2 and lighting switch (E1) using Current flow diagram

Voltage OK →

Check earth connection of defective fog light

- Set measuring range selector switch of multimeter V.A.G 1526 A to 20 Volt =
- Connect red test probe (+) to chamber 1 of 2-pin connector T2
- Connect black test probe (–) to chamber 2 of 2-pin connector T2
- Switch on ignition
- Switch on fog lights

Voltage not OK	Voltage OK

Voltage not OK → Check wiring from defective fog light to earth

END

satelettronica

Checking turn signals and hazard warning lights

Equipment required for fault finding:

- *Multimeter V.A.G. 1526 or V.A.G. 1526 A*
- *Adapter set V.A.G. 1594 A*
- *Valid Current Flow Diagram*

Before commencing fault finding ensure that the battery negative terminal clamp is tight.

Test prerequisites:

- Fuse SB7 (7.5 A) and SB14 (10 A) in fuse holder OK.!
- All turn signal bulbs OK.!

Test preparation:

- Switch off ignition and all electric consumers.
- Removing hazard warning lights switch ⇒ Electrical system, Repair group 96.
- Removing steering column switch trim ⇒ Electrical system, Repair group 94.

Note:

If the cause for complaint is the hazard warning light system and the normal turn signal system is functioning fault free, the fault should only be sought in the terminal 30 voltage supply for the hazard warning lights switch.
In the opposite situation, i.e. the cause of complaint is the turn signal system and the hazard warning lights system is functioning fault free, the fault should only be sought in the voltage supply for the hazard warning lights switch (connector T7c, chamber 6 coming from relief relay for X-contact).

If the fault has not been found after completing all test steps, renew the hazard warning lights system switch with integrated flasher relay!

Perform a functional test of the turn signal and hazard warning lights system after rectifying faults.

The Fault finding programme begins on the next page!

satelettronica

Checking voltage supply for the hazard warning lights switch (E3)

- Set measuring range switch of multimeter V.A.G 1526 to 20 V =
- Remove hazard warning lights switch ⇒ Electrical system, Repair group 96
- Pull 7-pin connector off hazard warning lights switch
- Connect red test probe (+) to chamber 6 (terminal 75a) of detached 7-pin connector
- Connect black test probe (–) to chamber 5 (terminal 31) of detached 7-pin connector
- Switch on ignition

Voltage not OK.	Display approx. battery voltage

↓ Check positive and negative wiring using Current flow diagram

↓

Checking voltage supply (terminal 30) for the hazard warning lights switch (E3)

- Switch off ignition
- Set measuring range switch of multimeter V.A.G 1526 to 20 V =
- Connect red test probe (+) to chamber 7 (terminal 30) of detached 7-pin connector
- Connect black test probe (–) to chamber 5 (terminal 31) of detached 7-pin connector

Voltage not OK.	Display approx. battery voltage

↓ Check positive and negative wiring using Current flow diagram

↓

Checking illumination for hazard warning lights switch (E3)

- Set measuring range switch of multimeter V.A.G 1526 to 20 V =
- Connect red test probe to chamber 4 (terminal 58b) of detached 7-pin connector
- Connect black test probe to chamber 5 of detached 7-pin connector
- Switch on side lights, set instrument lighting rheostat to fully "bright"

Voltage not OK.	Display approx. battery voltage

↓ Check wiring using Current Flow Diagram

↓ Replace hazard warning lights switch (E3)

↓

Checking turn signal switch (E2)

- General body repairs, interior Repair group 70
- Set measuring range switch of multimeter V.A.G 1526 to ⊣◀/♪
- Remove steering column switch trim ⇒ Electrical system Repair group 94
- Pull 7-pin connector off turn signal switch
- Connect auxiliary cables to contacts 2 and 3 of turn signal switch
- Connect red test probe to auxiliary cable on contact 2
- Connect black test probe to auxiliary cable on contact 3
- Operate turn signal switch to turn left

Signal does not sound	Signal sounds

↓ Renew turn signal switch (E2)

↓ **A**

satelettronica

A

Checking turn signal switch (E2)

- Set measuring range switch of multimeter V.A.G 1526 to ⊣◄/♪
- Connect auxiliary cables to contacts 2 and 7 of turn signal switch
- Connect red test probe to auxiliary cable on contact 2
- Connect black test probe to auxiliary cable on contact 7
- Operate turn signal switch to turn right

Signal does not sound	Signal sounds

Signal does not sound → Renew turn signal switch (E2)

Signal sounds →

Checking wiring from turn signal relay (J1) to turn signal switch (E2)

- Set measuring range switch of multimeter V.A.G 1526 to ⊣◄/♪
- Connect red test probe to chamber 1 of connector T7c detached from hazard warning switch
- Connect black test probe to chamber 2 of connector T7 detached from turn signal switch

Signal does not sound	Signal sounds

Signal does not sound → Check wiring using Current flow diagram

Signal sounds →

Checking wiring from turn signal relay (J1) to turn signal switch (E2)

- Set measuring range switch of multimeter V.A.G 1526 to ⊣◄/♪
- Connect red test probe to chamber 3 of connector T7a detached from hazard warning switch
- Connect black test probe to chamber 3 of connector T7 detached from turn signal switch

Signal does not sound	Signal sounds

Signal does not sound → Check wiring using Current flow diagram

Signal sounds →

Checking wiring from turn signal relay (J1) to turn signal switch (E2)

- Set measuring range switch of multimeter V.A.G 1526 to ⊣◄/♪
- Connect red test probe to chamber 2 of connector T7c detached from hazard warning switch
- Connect black test probe to chamber 7 of connector T7 detached from turn signal switch

Signal does not sound	Signal sounds

Signal does not sound → Check wiring using Current flow diagram

Signal sounds → B

satelettronica

B

Note: During the following test steps all of the turn signals on the left or right-hand side of the vehicle are supplied with continuous current. After connecting this current supply it is only necessary to perform the relevant test steps for the turn signals which are "not" lit

Checking wiring to front right turn signal (M7)

- With aid of an auxiliary cable make a connection between chamber 7 (terminal 30) and chamber 2 (R) on connector T7c for turn signal relay (J1)
- Set measuring range switch of multimeter V.A.G 1526 to 20 V =
- Detach connector from front right turn signal
- Connect red test probe to chamber 1 (+) of connector detached from the turn signal
- Connect black test probe to chamber 2 (–) of connector detached from the turn signal

Voltage not OK	Display approx. battery voltage
Check wiring using Current flow diagram	

Checking wiring to front right side mounted turn signal (M19)

- Set measuring range switch of multimeter V.A.G 1526 to 20 V =
- Remove right side mounted turn signal
- Connect red test probe to chamber 2 (+) of connector detached from side mounted turn signal
- Connect black test probe to chamber 1 (–) of connector detached from side mounted turn signal

Voltage not OK	Display approx. battery voltage
Check wiring using Current flow diagram	

Checking wiring to rear right turn signal (M8)

- Set measuring range switch of multimeter V.A.G 1526 to 20 V =
- Detach connector from right tail light
- Connect red test probe to chamber 2 of 5-pin connector T5a detached from tail light
- Connect black test probe to chamber 5 of 5-pin connector T5a detached from tail light

Voltage not OK	Display approx. battery voltage
Check wiring using Current flow diagram	

C

satelettronica

C

Checking wiring to right turn signal warning lamp (K94)

- Set measuring range switch of multimeter V.A.G 1526 to 20 V =
- Remove dash panel insert
- Pull off 32-pin connector T32
- Connect red test probe to chamber 2 of detached connector T32
- Connect black test probe to chamber 24 of detached connector T32

Voltage not OK	Display approx. battery voltage

Voltage not OK → Check wiring using Current flow diagram

Display approx. battery voltage →

The function of the turn signal warning lamp (K94) is cause for complaint

Yes	No

Yes →

Perform self-diagnosis of dash panel insert and interrogate fault memory. Check earth connections for dash panel insert using Current flow diagram

→ If no fault can be found and the warning lamp does not function, replace dash panel insert

No →

Checking wiring to front left turn signal (M5)

- With aid of an auxiliary cable make a connection between chamber 7 (terminal 30) and chamber 3 (L) on connector T7c for turn signal relay (J1)
- Set measuring range switch of multimeter V.A.G 1526 to 20 V =
- Detach connector from front left turn signal
- Connect red test probe to chamber 1 (+) of connector detached from the turn signal
- Connect black test probe to chamber 2 (–) of connector detached from the turn signal

Voltage not OK	Display approx. battery voltage

Voltage not OK → Check wiring using Current flow diagram

Display approx. battery voltage → D

satelettronica

D

Check wiring to front left side mounted turn signal (M18)

- Set measuring range switch of multimeter V.A.G 1526 to 20 V =
- Remove right side mounted turn signal
- Connect red test probe to chamber 2 (+) of connector detached from side mounted turn signal
- Connect black test probe to chamber 1 (–) of connector detached from side mounted turn signal

Voltage not OK	Display approx. battery voltage

Voltage not OK → Check wiring using Current flow diagram

Checking wiring to rear left turn signal (M6)

- Set measuring range switch of multimeter V.A.G 1526 to 20 V =
- Detach connector from left tail light
- Connect red test probe to chamber 2 of 5-pin connector T5b detached from tail light
- Connect black test probe to chamber 5 of 5-pin connector T5b detached from tail light

Voltage not OK	Display approx. battery voltage

Voltage not OK → Check wiring using Current flow diagram

Checking wiring to left turn signal warning lamp (K65)

- Set measuring range switch of multimeter V.A.G 1526 to 20 V =
- Connect red test probe to chamber 18 of detached connector T32
- Connect black test probe to chamber 24 of detached connector T32

Voltage not OK	Display approx. battery voltage

Voltage not OK → Check wiring using Current flow diagram

Was the function of the turn signal warning lamp (K65) cause for complaint?

Yes	No
→ E	→ F

satelettronica

E

Perform self-diagnosis of dash panel insert and interrogate fault memory. Check dash panel insert earth connections using Current flow diagram.

If no fault can be found and the warning lamp does not function, replace dash panel insert

F

End of fault finding programme. If no fault can be found renew switch for hazard warning lights with integrated flasher relay.

Remove auxiliary cables from the connector for the turn signal relay

END

satelettronica

Checking headlight range control

Note:
The following fault finding programme can be used for both headlights

Test prerequisites:

- Battery voltage OK!
- Dipped beam OK!
- 19-pin compact connector near left of radiator, correctly connected!

Check wiring (terminal 31) to the headlight range control actuating motors

- Switch ignition off
- Detach 8-pin connector behind the headlight
- Set measuring range of multimeter to ⊣◀/♪
- Connect red test probe to chamber 7 of 8-pin connector
- Connect black test probe to battery negative terminal

Signal sounds	Signal does not sound
↓ Check (terminal 31) wiring using Current flow diagram	↓

Check wiring (terminal 56b) to the headlight range control actuating motors

- Set measuring range switch of multimeter to 20 V =
- Connect red test probe to chamber 5 of 8-pin connector
- Switch ignition on
- Switch on dipped beam

No voltage present	Voltage present
↓ Check wiring (terminal 56b) using Current flow diagram	↓

Check regulating voltage for actuating motors

- Connect red test probe to chamber 1 of 8-pin connector
- Operate headlight range control adjuster (E102)

Voltage changes	No voltage change
↓ Wiring and headlight range control adjuster (E102) OK – Renew headlight insert with headlight range control actuating motor	↓ A

satelettronica

A

↓

Check voltage supply (terminal 56b) for the headlight range control adjuster (E102)

- Switch ignition and lights off
- Remove lighting switch (E1) with headlight range control adjuster (E102) ⇒ Workshop Manual Electrical system, Repair group 96
- Connect black test probe to body earth
- Connect red test probe to chamber 4 of headlight range control adjuster (E102)
- Switch ignition on
- Switch dipped beam headlights on

No voltage present	Voltage present

No voltage present → Check wiring (terminal 56b) to adjuster using Current flow diagram

Voltage present →

Check supply voltage (terminal 31) for headlight range control adjuster (E102)

- Switch ignition and lights off
- Connect black test probe to chamber 1 of headlight range control adjuster (E102)
- Switch ignition on
- Switch dipped beam headlights on

No voltage present	Voltage present

No voltage present → Check wiring (terminal 31) from adjuster to earth point 76 using Current flow diagram

Voltage present →

Check regulating voltage for actuating motors on headlight range control adjuster (E102)

- Connect red test probe to chamber 2 of headlight range control adjuster (E102)
- Operate headlight range control adjuster (E102)
- Switch ignition on
- Switch dipped beam headlights on

No voltage change	Voltage changes

No voltage change → Renew lighting switch (E1) with headlight range control adjuster (E102)

Voltage changes → Headlight range control adjuster (E102) OK
– Check wiring from headlight range control adjuster (E102) to the actuating motors

END

satelettronica

Checking folding sliding roof (open switch)

The following is required for fault finding:

- *Multimeter V.A.G 1526 or V.A.G 1526 A*
- *Adapter set V.A.G 1594 A*
- *Valid current flow diagram*

Test prerequisites:

- Battery voltage OK!
- Folding sliding roof mechanically OK!

Check voltage supply terminals 30 and 31 to folding sliding roof switch (open) (E268)

- Remove folding sliding roof switch (open) (J268) ⇒ Workshop manual Electrical system, Repair group 96
- Switch ignition on
- Set measuring range switch of multimeter V.A.G 1526 to 20 V direct voltage
- Connect red test probe (+) to chamber 6 of 6-pin connector
- Connect black test probe (–) to chamber 2 of 6-pin connector

No voltage present	Approx. battery voltage
↓ Check wiring using Current flow diagram	↓

Check folding sliding roof switch (open) (E268)

- Attach 6-pin connector to folding sliding roof switch (J268) and lock into place
- Pull 2-pin connector off folding sliding roof motor (V86)
- Connect red test probe (+) to chamber 1 of 2-pin connector
- Connect black test probe (–) to chamber 2 of 2-pin connector
- Perform test measurements according to table:

Folding sliding roof switch (E268) in switch position:	Test result:
No voltage present	Approx. battery voltage
↓ Check wiring using Current flow diagram and/or replace folding sliding roof switch (open) (E268)	↓ Renew folding sliding roof motor (V86)

satelettronica

Checking folding sliding roof (close switch)

The following is required for fault finding:

- *Multimeter V.A.G 1526 or V.A.G 1526 A*
- *Adapter set V.A.G 1594 A*
- *Valid current flow diagram*

Test prerequisites:

- Battery voltage OK!
- Folding sliding roof mechanically OK!

Check voltage supply terminal 30 and 31 to folding sliding roof switch (close) (E269)

- Remove folding sliding roof switch (open) (J268) ⇒ Workshop manual Electrical system, Repair group 96
- Switch ignition on
- Set measuring range switch of multimeter V.A.G 1526 to 20 V direct voltage
- Connect red test probe (+) to chamber 6 of 6-pin connector
- Connect black test probe (–) to chamber 2 of 6-pin connector

No voltage present	Approx. battery voltage
↓ Check wiring using Current flow diagram	↓

Check folding sliding roof switch (close) (E269)

- Attach 6-pin connector to folding sliding roof switch (close) (J269) and lock into place
- Pull 2-pin connector off folding sliding roof motor (V86)
- Connect red test probe (+) to chamber 2 of 2-pin connector
- Connect black test probe (–) to chamber 1 of 2-pin connector
- Perform test measurements according to table:

Folding sliding roof switch (E269) in switch position:	Test result:
No voltage present	Approx. battery voltage
↓ Check wiring using Current flow diagram and/or replace folding sliding roof switch (open) (E269)	↓ Renew folding sliding roof motor (V86)

satelettronica

Checking windscreen wash/wipe system

Contents

- Checking windscreen wipe system 22/2
- Checking windscreen wash system 22/5

The following is required for fault finding:

- *Multimeter V.A.G 1526 or V.A.G 1526 A*
- *Adapter set V.A.G 1594 A*
- *Valid Current flow diagram*

Always check battery negative terminal for tightness before starting fault finding.

Test prerequisites:

- Fuse No. SB50 (15 A) in fuse holder is OK!
- Relief relay for X contact (J59) is OK!

Preparing for fault finding:

- Switch off ignition and all electrical consumers.
- Remove dash panel lower trim ⇒ General body repairs, Repair group 70.
- Remove steering column switch trim ⇒ Electrical system, Repair group 94.
- Remove automatic intermittent wash/wipe relay (J31), control number 19

After rectifying faults, perform a functional check of the windscreen wipe/wash system.

The Fault finding programme begins on the next page!

satelettronica

Checking windscreen wipe system

Checking voltage supply for windscreen wiper intermittent operation switch (E22)

- Set measuring range switch of multimeter V.A.G 1526 to 20 V =
- Pull 5-pin connector off wiper intermittent operation switch
- Connect red test probe (+) to chamber 2 of detached 5-pin connector
- Connect black test probe (–) to chamber 3 of detached 4-pin connector T4a
- Switch on ignition

Voltage not OK	Voltage OK

Voltage not OK → Check positive and negative wiring using Current flow diagram

Voltage OK →

Checking voltage supply for automatic intermittent wash/wipe relay (J31)

- Set measuring range switch of multimeter V.A.G 1526 to 20 V =
- Connect red test probe (+) to chamber 8/75a of relay socket for automatic intermittent wash/wipe relay
- Connect black test probe (–) to chamber 4/31 of relay socket for automatic intermittent wash/wipe relay
- Switch on ignition

Voltage not OK	Voltage OK

Voltage not OK → Check positive and negative wiring using Current flow diagram

Voltage OK →

Checking wiper positions on windscreen wiper intermittent operation switch (E22)

- Set measuring range switch of multimeter V.A.G 1526 to 20 V =
- Reconnect 5-pin connector to windscreen wiper intermittent operation switch
- Connect black (–) test probe to chamber 4/31 of relay socket for automatic intermittent wash/wipe relay
- Switch on ignition
- Perform voltage tests as per table:

Connect red test probe (+) to relay socket for automatic intermittent wash/wipe relay (J31):	Wiper intermittent operation switch in switch position:	Voltage test result:
Chamber 5/53S	"Flick wipe"	Approx. battery voltage
Chamber 1/J	"Intermittent wipe"	Approx. battery voltage
Chamber 5/53S	"1st speed"	Approx. battery voltage

Test result not OK	Test result OK

Test result not OK → Check wiring using Current flow diagram. If no fault can be found renew windscreen wiper intermittent operation switch (E22)

Test result OK → A

satelettronica

A

Checking positions of the intermittent operation windscreen wiper switch (E22)	
– Set measuring range switch of multimeter V.A.G 1526 to 20 V = – Connect black test probe (–) to chamber 4/31 of relay socket for automatic intermittent wash/wipe relay – Pull 5-pin connector off windscreen wiper motor – Connect red test probe (+) to chamber 2/53b of detached 5-pin connector – Switch on ignition – Set intermittent windscreen wiper switch to "2nd speed"	
Test result not OK	Test result OK

Check wiring using Current flow diagram. If no fault can be found replace switch for intermittent windscreen wiper operation (E22)

Checking wiring from automatic intermittent wash/wipe relay (J31) to wiper motor (V)		
– Switch off ignition – Set multimeter V.A.G 1526 measuring range switch to ⊣⊢/♪ – Pull 5-pin connector off wiper motor – Perform continuity tests as per table:		
Connect red (+) test probe to relay socket for automatic intermittent wash/wipe relay (J31):	Connect black test probe (–) to chambers on wiper motor connector:	Test result:
Chamber 8/75a	Chamber 1/53a	Signal sounds
Chamber 2/53M	Chamber 4/53	Signal sounds
Test result not OK		Test result OK

Check wiring using Current flow diagram

Checking wiring from wiper motor (V) to vehicle earth	
– Set measuring range switch of multimeter V.A.G 1526 to ⊣⊢/♪ – Connect red (+) test probe to chamber 5/31 of wiper motor connector – Connect black (–) test probe to vehicle earth	
Signal does not sounds	Signal sounds

Check wiring using Current flow diagram

B

satelettronica

B

Checking windscreen wiper motor (V)

- Using an auxiliary cable bridge between chambers 2/53M and 1/J of automatic intermittent wash/wipe relay socket
- Switch on ignition
- Set windscreen wiper intermittent operation switch to "intermittent wipe" position

Wiper motor does not run	Wiper motor runs
Renew wiper motor (V)	

Checking windscreen wiper motor (V)

- Using an auxiliary cable bridge between chambers 2/53M and 5/53S of automatic intermittent wash/wipe relay socket
- Switch on ignition
- Switch windscreen wiper intermittent operation switch to "1st speed" position

Wiper motor does not run	Wiper motor runs
Renew wiper motor (V)	

Checking windscreen wiper motor (V)

- Ignition switched on
- Set windscreen wiper intermittent operation switch to "2nd speed" position

Wiper motor does not run	Wiper motor runs
Renew wiper motor (V)	

Checking parking switch in windscreen wiper motor (V)

- Using an auxiliary cable bridge between chambers 2/53M and 5/53S of automatic intermittent wash/wipe relay socket
- Switch on ignition
- Set window wiper intermittent operation switch to "1st speed" position, switch on and off several times

The windscreen wiper motor does not operate each time or does not park each time	The windscreen wiper motor parks each time
Renew wiper motor (V)	Renew automatic intermittent wash/wipe relay (J31)

The windscreen wiper system fault finding programme ends here, the windscreen washer system fault finding programme begins on the next page!

satelettronica

Checking windscreen washer system

Note:

The wiper system must be fully functional. The reservoir, the hoses and the washer jets must be serviceable.

Checking voltage supply for windscreen and rear window washer pump (V59)

- Set measuring range switch of multimeter V.A.G 1526 to 20 V =
- Pull 2-pin connector off windscreen and rear window washer pump
- Connect red test probe (+) to chamber 1 of detached connector
- Connect black test probe (–) to chamber 2 of detached connector
- Switch on ignition
- Switch on and hold window wiper intermittent operation switch to "Windscreen wash and wipe" and observe voltage on multimeter

Voltage not OK	Voltage OK
↓	↓ Renew windscreen and rear window washer pump (V59)

Checking wiring to windscreen and rear window washer pump (V59)

- Set measuring range switch of multimeter V.A.G 1526 to ⊣⊢/♪
- Pull 4-pin connector T4a off intermittent wash/wipe switch
- Pull connector off windscreen and rear window washer pump
- Bridge both chambers of detached connector for windscreen and rear window washer pump
- Connect red test probe (+) to chamber 2 of detached 4-pin connector T4a
- Connect black test probe (–) to chamber 1 of detached 4-pin connector T4a

Signal does not sound	Signal sounds
↓ Using Current flow diagram check wiring to windscreen and rear window washer pump (V59)	↓ Renew intermittent wash/wipe switch (E22)

END

satelettronica

Checking rear window wash/wipe system

Contents

- Checking rear window wipe system 23/2
- Checking rear window wash system 23/3

The following is required for fault finding:

- *Multimeter V.A.G 1526 or V.A.G 1526 A*
- *Adapter set V.A.G 1594 A*
- *Valid Current flow diagram*

Always check battery negative terminal for tightness before starting fault finding.

Prerequisites:

- Fuse No. SB6 (15 A) in fuse holder is OK!
- Fuse No. SB50 (15 A) in fuse holder is OK!
- Relief relay for X contact (J59) is functioning OK!

Preparing for fault finding:

- Switch off ignition and all electrical consumers.
- Remove steering column switch trim ⇒ Electrical system, Repair group 94.

After rectifying faults, perform a functional check of the rear window wash/wipe system

The Fault finding programme begins on the next page!

satelettronica

Checking rear window wipe system

Checking voltage supply for rear window wiper switch (E34)

- Set measuring range switch of multimeter V.A.G 1526 to 20 V =
- Pull 5-pin connector T5d off rear window wiper switch
- Connect red test probe (+) to chamber 1 of detached 5-pin connector T5e
- Connect black test probe (–) to chamber 3 of detached 4-pin connector T4a
- Switch on ignition

Voltage not OK	Voltage OK
Using Current flow diagram check positive and negative wiring	

Checking switch for rear window wiper (E34)

- Set measuring range switch of multimeter V.A.G 1526 to 20 V =
- Attach 5-pin connector T5d to rear window wiper switch
- Remove tailgate trim ⇒ General body repairs, Repair group 70
- Pull 4-pin connector off rear window wiper motor
- Connect red test probe (+) to chamber 2 of detached 4-pin connector
- Connect black test probe (–) to chamber 1 of detached 4-pin connector
- Switch on ignition
- Switch rear window wiper switch to "intermittent wipe position"

Voltage not OK	Voltage OK
Replace switch for rear window wiper (E34)	

Checking voltage supply to rear window wiper motor (V12)

- Remove tailgate trim ⇒ General body repairs, Repair group 70
- Set measuring range switch of multimeter V.A.G 1526 to 20 V =
- Connect red test probe (+) to chamber 4/53a of connector for rear window wiper motor
- Connect black test probe (–) to chamber 1 of connector for rear window wiper motor
- Switch on ignition

Voltage not OK	Voltage OK
Using Current flow diagram check positive and negative wiring	A

satelettronica

A

Checking switch for intermittent wiper operation (E22)	
– Set measuring range switch of multimeter V.A.G 1526 to 20 V = – Connect red test probe (+) to chamber 3/53 of detached connector for rear window wiper motor – Connect black test probe (–) to chamber 1 rear window wiper motor connector – Switch on ignition – Set switch for intermittent operation to "rear window wipe and wash" position and hold	
Voltage not OK.	Voltage OK.

Voltage OK. → Replace motor for rear window wiper (V12)

Voltage not OK. →

Checking wiring for rear window wiper motor (V12)	
– Switch off ignition – Set measuring range switch of multimeter V.A.G 1526 to ⊣⊢/♪ – Connect red test probe (+) to chamber 2 of detached 4-pin connector – Connect black test probe (–) to chamber T5d/5 (E34) of detached 5-pin connector	
Signal does not sound	Signal sounds

Signal does not sound → Check wiring using current flow diagram

Signal sounds → Replace switch (E22) for intermittent wiper operation

The fault finding programme for the rear window wiper system ends here.

Checking rear window washer system

Note:

The wiper system must be fully functional. The reservoir, the hoses and the washer jets must be serviceable.

Checking voltage supply for windscreen and rear window washer pump (V59)	
– Set measuring range switch of multimeter V.A.G 1526 to 20 V = – Pull 2-pin connector off windscreen and rear window washer pump – Connect red test probe (+) to chamber 2 of detached 2-pin connector – Connect black test probe (–) to chamber 1 of detached 2-pin connector – Switch on ignition – Switch on and hold window wiper intermittent operation switch in "rear window wipe and wash" position and observe reading on multimeter	
Voltage not OK	Voltage OK

Voltage not OK → A

Voltage OK → B

satelettronica

A

B

Renew windscreen and rear window washer pump (V59)

Checking wiring to windscreen and rear window washer pump (V59)	
– Set measuring range switch of multimeter V.A.G 1526 to ⊣◀/♪ – Pull 4-pin connector T4a off windscreen wiper switch for intermittent operation – Pull connector off windscreen and rear window washer pump – Using auxiliary cable bridge both chambers of connector detached from windscreen and rear window washer pump – Connect red test probe (+) to chamber 2 of detached 4-pin connector T4a – Connect black test probe (–) to chamber 1 of detached 4-pin connector T4a	
Signal does not sound	Signal sounds

Check wiring to windscreen and rear window washer pump (V59) using Current flow diagram

Renew windscreen wiper switch for intermittent operation (E22)

END

satelettronica

Checking additional coolant heating

Function:

The additional coolant heating is an additional electrical heating in the engine coolant circuit.
It's function is to additionally heat the coolant after a cold start, during the warm-up phase and during urban driving or traffic hold-ups.
The additional heating is controlled by the Diesel direct injection system control unit (J248).
The driver cannot influence the switching on or off of the additional heating.
Whether the heating is on or off and the heater output are dependant on the ambient temperature, the coolant temperature and the alternator loading.

Equipment required for fault finding:

- *Multimeter V.A.G. 1526 or V.A.G. 1526 A*
- *Adapter set V.A.G. 1594 A*
- *Valid Current Flow Diagram*

Before commencing fault finding ensure that the battery negative terminal clamp is tight.

Test prerequisites:

- Battery voltage OK.!
- Fuse S163 (80 A) in the fuse housing on the battery OK.!
- Fuse S164 (50 A) in the fuse housing on the battery OK.!
- Fuse S176 (50 A) in the fuse housing on the battery OK.!
- Fuse SB23 (5 A) in fuse holder OK.!
- Coolant heater elements (Q7) OK.! (checking ⇒ Workshop Manual Diesel direct injection and glow plug system, self-diagnosis).
- Diesel direct injection system control unit (J248) fault memory interrogated, all faults rectified and fault memory erased (⇒ Workshop Manual Diesel direct injection and glow plug system).

Test preparation:

- Switch off ignition and all electrical consumers.

The fault finding programme begins on the next page!

satelettronica

Checking voltage supply (terminal 30) from voltage supply relay (J317)

- Set measuring range switch of multimeter V.A.G 1526 to 20 V =
- Remove voltage supply relay (J317)
- Connect red test probe (+) to chamber 2/30 of relay socket
- Connect black test probe (–) to body earth

Voltage not OK.	Display shows approx. battery voltage

↓ Check wiring using Current flow diagram

↓

Checking voltage supply relay (J317)

- Install voltage supply relay (J317) again
- Set measuring range switch of multimeter V.A.G 1526 to 20 V =
- Connect red test probe (+) to chamber 6/87 of relay socket
- Connect black test probe (–) to body earth
- Switch on ignition

Voltage not OK.	Display shows approx. battery voltage

↓ → B

Checking voltage supply (terminal 30) from voltage supply relay (J317)

- Set measuring range switch of multimeter V.A.G 1526 to 20 V =
- Remove voltage supply relay (J317)
- Connect red test probe (+) to chamber 9/85 of relay socket
- Connect black test probe (–) to body earth

Voltage not OK.	Display shows approx. battery voltage

↓ Renew voltage supply relay (J317)

↓

Checking wiring from voltage supply relay (J317) to engine control unit (J248)

- Set measuring range switch of multimeter V.A.G 1526 to ⊣◄/♪
- Pull 121-pin connector T121 off engine control unit (J248)
- Connect red test probe (+) to chamber 9/85 of relay socket for voltage supply relay
- Connect black test probe (–) to chamber 18 of 121-pin connector T121

Signal does not sound	Signal sounds

↓ Check wiring using Current flow diagram

↓ → A

satelettronica

A

Checking earth connections from engine control unit (J248)

- Set measuring range switch of multimeter V.A.G 1526 to ⊣◀/♪
- Connect black test probe (–) to body earth
- Connect red test probe (+) to chambers 4, and 5 of 121-pin connector T121 one after the other and listen for signal each time

Signal does not sound	Signal sounds
Check wiring using Current Flow Diagram	

Checking voltage supply relay (J317)

- Install voltage supply relay (J317) again
- Connect an auxiliary cable to chamber 18 of 121-pin connector T121 detached from engine control unit
- Hold auxiliary cable to body earth and listen for "clicking" from the voltage supply relay

Voltage supply relay does not "click"	Voltage supply relay "clicks"
Replace voltage supply relay (J317)	Remove auxiliary cable from chamber 18 of 121-pin connector T121. Perform further fault finding via self-diagnosis of engine control unit

B

Checking relay for high heat output (J360)

- Set measuring range switch of multimeter V.A.G 1526 to 20 V =
- Pull out relay for high heat output (J360)
- Connect red test probe (+) to chamber 4/87a of relay socket
- Connect black test probe (–) to body earth

Voltage not OK.	Display shows approx. battery voltage
Check wiring using Current flow diagram	

C

satelettronica

C

Checking relay for high heat output (J360)

- Install relay for high heat output (J360) again
- Connect an auxiliary cable to chamber 22 of 121-pin connector T121 detached from engine control unit
- Hold auxiliary cable to body earth and listen for "clicking" from the relay for high heat output

Relay for high heat output does not "click"	Relay for high heat output "clicks"

Replace relay for high heat output (J360)

Checking voltage supply for relay for low heat output (J359)

- Set measuring range switch of multimeter V.A.G 1526 to 20 V =
- Pull out relay for low heat output (J359)
- Connect red test probe (+) to chamber 3/87a of relay socket
- Connect black test probe (–) to body earth

Voltage not OK.	Display shows approx. battery voltage

Check wiring using Current flow diagram

Checking relay for low heat output (J359)

- Install relay for low heat output (J359) again
- Connect an auxiliary cable to chamber 21 of 121-pin connector T121 detached from engine control unit
- Hold auxiliary cable to body earth and listen for "clicking" from the relay for low heat output (J359)

Relay for low heat output does not "click"	Relay for low heat output "clicks"

Renew relay for low heat output (J359)

D

satelettronica

D

Checking voltage supply (terminal 30) for the coolant heater elements (Q7)

- Set measuring range switch of multimeter V.A.G 1526 to 20 V =
- Pull out relay for high heat output (J360)
- Connect red test probe (+) to chamber 2/30a of relay socket
- Connect black test probe (–) to body earth

Voltage not OK.	Display shows approx. battery voltage

Check wiring using Current flow diagram

Checking relay for high heat output (J360)

- Install relay for high heat output (J360) again
- Set measuring range switch of multimeter V.A.G 1526 to 20 V =
- Connect red test probe (+) to chamber 8 of relay socket
- Connect black test probe (–) to body earth
- Connect an auxiliary cable to chamber 22 of 121-pin connector T121 detached from engine control unit
- Hold auxiliary cable to body earth and observe battery voltage on multimeter V.A.G 1526

Voltage not OK.	Display shows approx. battery voltage

Renew relay for high heat output (J360)

Checking wiring for the coolant heater elements (Q7)

- Set measuring range switch of multimeter V.A.G 1526 to ⊣◀/♪
- Pull out relay for high heat output (J360)
- Connect red test probe (+) to chamber 8 of relay socket
- Connect black test probe (–) to the connectors for the three coolant heater elements one after the other and listen for the signal. The signal must sound for one coolant heater element

Signal does not sound	Signal sounds

Check wiring from relay for high heat output (J360) to the coolant heater elements using Current flow diagram

E

satelettronica

E

Checking voltage supply (terminal 30) for the coolant heater elements (Q7)

- Set measuring range switch of multimeter V.A.G 1526 to 20 V =
- Pull out relay for low heat output (J359)
- Connect red test probe (+) to chamber 1/30a of relay socket
- Connect black test probe (–) to body earth

Voltage not OK.	Display shows approx. battery voltage

Check wiring using Current flow diagram

Checking relay for low heat output (J359)

- Install relay for low heat output (J359) again
- Set measuring range switch of multimeter V.A.G 1526 to 20 V =
- Connect red test probe (+) to chamber 2/87 of relay socket
- Connect black test probe (–) to body earth
- Connect an auxiliary cable to chamber 21 of 121-pin connector T121 detached from engine control unit
- Hold auxiliary cable to body earth and observe battery voltage reading on multimeter V.A.G 1526

Voltage not OK.	Display shows approx. battery voltage

Renew relay for low heat output (J359)

Checking wiring for the coolant heater elements (Q7)

- Set measuring range switch of multimeter V.A.G 1526 to ⊣◀/♪
- Pull out relay for low heat output (J359)
- Connect red test probe (+) to chamber 2/87 of relay socket
- Connect black test probe (–) to the connectors for the three coolant heater elements one after the other and listen for the signal. The signal must sound for two coolant heater elements

Signal does not sound	Signal sounds

Check wiring from relay for low heat output (J359) to the coolant heater elements using Current flow diagram

F

satelettronica

F

Checking coolant heater elements (Q7)	
– Set measuring range switch of multimeter V.A.G 1526 to ⊣◀/♪ – Switch on ignition – Connect black test probe (–) to body earth – Connect red test probe (+) to the connector contacts for the three coolant heater elements one after the other and listen for the signal	
Signal does not sound	Signal sounds
Renew appropriate coolant heater element	Renew engine control unit (J248)

END

satelettronica

Checking central locking
(Without safe function)

Notes:

- *If the vehicle is equipped with the single door opening function, the wire to chamber 8 of the 12-pin connector for pump with control unit (V69) must be disconnected (cut). The pump with control unit (V69) is located in the luggage compartment, on right behind the cover.*
- *If the front left central locking actuating element (F131) does not lock or unlock, check whether the vacuum pump operates for longer than 5 secs. and then after a brief pause pumps again. If this is the case, there is a leak which must first be rectified!*

The following is required for fault finding:

- *Multimeter V.A.G 1526 or V.A.G 1526 A*
- *Adapter set V.A.G 1594 A*
- *Valid current flow diagram*

Test prerequisites:

- Fuses SB38 (25 A); SB39 (25A); SB41 (15A) OK.
- 18-pin connectors in the A pillars, correctly connected
- Central locking vacuum pipes, correctly connected and serviceable.

Check terminal 30 and terminal 31 voltage supply

- Pull 12-pin connector off the pump with control unit (V69)
- Set hand multimeter range selector switch to 20 V =
- Connect red test probe (+) to 12-pin connector, chambers 1 and 2 one after the other
- Connect black test probe (–) to 12-pin connector, chambers 3 and 8 one after the other

No voltage present	Approx. battery voltage

↓ Check terminal 30 and terminal 31 wiring using Current flow diagram

↓

Check central locking switch (F59 / F114) in door lock ("locked" position)

- Connect red test probe (+) to chamber 7 of 12-pin connector
- Connect black test probe (–) to chamber 3 of 12-pin connector
- Hold door lock in driver's / front passenger's door lock in the "locked" position with the vehicle key

No voltage present	Approx. battery voltage

↓ Check wiring using Current flow diagram and/or central locking switch (F59 / F114) defective

↓

A

satelettronica

A

Check central locking switch (F59 / F114) in door lock ("open" position)	
– Connect red test probe (+) to chamber 10 of 12-pin connector – Connect black test probe (–) to chamber 3 of 12-pin connector – Hold door lock in driver's / front passenger's door in the "open" position with the vehicle key	
No voltage present	Approx. battery voltage

Check wiring using Current flow diagram and/or central locking switch (F59 / F114) defective

Check central locking actuating element (F131) in "driver's door unlocked" position	
– Unlock driver's door – Connect red test probe (+) to chamber 4 of 12-pin connector – Connect black test probe (–) to chamber 3 of 12-pin connector	
No voltage present	Approx. battery voltage

Check wiring using Current flow diagram and/or front left central locking actuating element (F131) defective

Check central locking actuating element (F131) in "driver's door locked" position	
– Lock driver's door – Set range selector switch of multimeter V.A.G 1526 to continuity ⊣/♪ – Connect red test probe (+) to chamber 4 of 12-pin connector – Connect black test probe (–) to chamber 3 of 12-pin connector	
Signal does not sound	Signal sounds

Check wiring using Current flow diagram and/or front left central locking actuating element (F131) defective

Replace pump with central locking control unit (V69)

END

satelettronica

Checking rain sensor for windscreen wiper system

The following is required for fault finding:

- *Multimeter V.A.G 1526 or V.A.G 1526 A*
- *Adapter set V.A.G 1594 A*
- *Valid Current flow diagram*

Always check battery negative terminal for tightness before starting fault finding.

Test prerequisites:

- Fuse No. 50 (15 A) in fuse holder OK!
- The windscreen wiper/washer system 1st and 2nd speeds are OK!
- The windscreen wiper/washer system wipe/wash function is OK!

Preparing for fault finding:

- Switch off ignition and all electrical consumers
- Remove lower dash panel trim ⇒ General body repairs, Repair group 70
- Remove steering column switch trim ⇒ Electrical system, Repair group 94
- Remove automatic intermittent wipe/wash system relay (J31)
- Remove interior light ⇒ Electrical system, Repair group 96
- Place windscreen wiper switch in the "off" position!

Notes:

- *When the intermittent wipe function is switched on with the ignition switched on the wiper arms will perform a wipe function, this is known as the "control wipe". This function will also be performed when the sensitivity of the rain sensor is adjusted in the direction of "more sensitive" with the intermittent wipe regulator, when the windscreen wiper intermittent wipe function switched on*
- *If the windscreen wiper switch is set to "intermittent" before the ignition is switched on, because for example the intermittent function was not switched off before the last time the ignition was switched off, then when the ignition is switched on again a control wipe will not take place and the intermittent wipe function will not operate further. The system is so designed to prevent an unintentional operation e.g. in a car wash.*
  To cancel this protection function, merely switch on any wiper function with the ignition switched on and then switch back to "intermittent" the "control wipe" will take place immediately and the intermittent function with the rain sensor is again fully operational.
- *The rain sensor can also activate the wiper speeds "1" or "2" via the intermittent wash/wipe relay when the rain gets heavier.*
- *Normal soiling of the windscreen in the area of the rain sensor will be registered by the rain sensor and taken into account.*

Perform a functional check of the windscreen wipe/wash system after rectifying a faults.

The fault finding programme begins on the next page!

satelettronica

Checking windscreen wiper system rain sensor

Checking voltage supply for windscreen wiper intermittent operation switch (E22)

- Set multimeter V.A.G 1526 measuring range switch to 20 V =
- Detach 5-pin connector from windscreen wiper switch for intermittent operation
- Connect red test probe (+) to chamber 2 of detached 5-pin connector
- Connect black test probe (–) to chamber 3 of detached 4-pin connector T4a
- Switch on ignition

Voltage not OK	Voltage OK

Voltage not OK → Check both positive and negative wiring using Current flow diagram

Voltage OK →

Checking voltage supply for automatic wipe/wash relay (J31)

- Set multimeter V.A.G 1526 measuring range switch to 20 V =
- Connect red test probe (+) to chamber 8 of relay socket for the intermittent wipe/wash relay
- Connect black test probe (–) to chamber 4/31 of relay socket for the intermittent wipe/wash relay
- Switch on ignition

Voltage not OK	Voltage OK

Voltage not OK → Check both positive and negative wiring using Current flow diagram

Voltage OK →

Checking "intermittent" position of windscreen wiper intermittent operation switch (E22)

- Set multimeter V.A.G 1526 measuring range switch to 20 V =
- Connect black test probe (–) to chamber 4/31 of relay socket for the intermittent wipe/wash relay
- Pull 5-pin connector off windscreen wiper motor
- Connect red test probe (+) to chamber 2/53b of detached connector
- Switch on ignition
- Set windscreen wiper switch to "2nd speed"

Voltage not OK	Voltage OK

Voltage not OK → Check wiring using Current flow diagram. If no fault can be found, renew windscreen wiper intermittent operation switch (E22)

Voltage OK → A

satelettronica

A

Checking voltage supply for rain sensor (G213)

- Set multimeter V.A.G 1526 measuring range switch to 20 V =
- Remove interior light ⇒ Electrical system Repair group 96
- Unclip plastic retainer with connectors inside on roof and pull slightly out of the opening for the interior light
- Connect red test probe (+) to chamber 2 of 4-pin connector T4a
- Connect black test probe (–) to chamber 3 of 4-pin connector T4a
- Switch on ignition
- Set windscreen wiper switch for intermittent operation from "off" position to "intermittent" operation position

Battery voltage display not OK	Battery voltage display OK

Battery voltage display not OK → Check positive and negative wiring using Current flow diagram. If no fault can be found replace the intermittent wipe/wash relay (J31)

Battery voltage display OK →

Checking function of "control wipe"

- Reconnect all connectors which have been detached
- Set intermittent operation windscreen wiper switch to "off"
- Switch on ignition
- Move intermittent operation windscreen wiper switch from "off" position to "intermittent" position

Wipers do not function	Wipers function for one sweep

Wipers do not function → Ensure that the correct sequence was used for the last test.
If the wipers do not function even though the correct sequence was maintained, replace the automatic intermittent wipe/wash relay (J31)

Wipers function for one sweep →

Checking function of rain sensor (G213)

- Clean windscreen in area of rain sensor
- Set windscreen wiper intermittent operation switch to "off" position
- Switch on ignition
- Set windscreen wiper intermittent operation switch to "intermittent" position
- Wait for the control wipe
- Run hand across windscreen over the rain sensor from the outside

Wipers do not function	Wipers function once or several times

Wipers do not function → B

Wipers function once or several times → End of check

satelettronica

B

Checking wiring from rain sensor (G213)	
– Set multimeter V.A.G 1526 measuring range switch to ⊣◀/♪ – Detach 4-pin connector T4a from rain sensor – Detach 9-pin connector T9a from automatic intermittent wash/wipe relay – Connect red test probe (+) to chamber 3 of 9-pin connector T9a for automatic intermittent wash/wipe relay – Connect black test probe (–) to chamber 1 of 4-pin connector T4a	
Signal does not sound	Signal sounds
Check wiring using Current flow diagram. After rectifying fault(s) repeat the fault finding programme from the test step "Checking function of rain sensor (G213)"	Renew rain sensor (G213)

END

satelettronica

Checking electric windows

Contents

- Checking driver's side electric window 27/2
- Checking front passenger's side electric window 27/4

The following is required for fault finding:

- *Multimeter V.A.G 1526 or V.A.G 1526 A*
- *Adapter set V.A.G 1594 A*
- *Valid current flow diagram*
- *Workshop Manual General body repairs*

Test prerequisites:

- Fuse SB26 (7.5 A), in fuse holder OK!
- Fuse SB38 (25 A), in fuse holder OK!
- Fuse SB39 (25 A), in fuse holder OK!
- Electric windows mechanically OK!

Preparing for fault finding:

- Switch off ignition and all electrical consumers.
- Remove electric window switch ⇒ General body repairs

After rectifying faults, perform a functional check of the electric windows

The Fault finding programme begins on the next page!

satelettronica

Checking driver's side electric window

Check voltage supply terminals 30 and 31 to front left (driver's side) electric window switch (E40)

- Pull 10-pin connector T10n off front left electric window switch (E40)
- Connect red test probe (+) to chamber 5 of 10-pin connector T10n
- Connect black test probe (–) to chamber 6 of 10-pin connector T10n

No voltage present	Approx. battery voltage

No voltage present → Check wiring using Current flow diagram

Check front left (driver's side) electric window switch (E40)

- Set range selector switch of multimeter V.A.G 1526 to 20 V direct voltage
- Attach 10-pin connector T10n to front left (driver' side) electric window switch (E40)
- Remove driver' door trim panel ⇒ General body repairs
- Pull 12-pin connector off front left electric window control unit (J295)
- Connect red test probe (+) to chamber 1 of 12-pin connector
- Connect black test probe (–) to chamber 4 of 12-pin connector
- Switch on ignition
- Front left (driver' side) electric window switch (E40), in switch position "open window"

No voltage present	Approx. battery voltage

No voltage present → Check wiring using Current flow diagram and/or renew front left (driver' side) electric window switch (E40)

Check front left (driver's side) electric window switch (E40)

- Set range selector switch of multimeter V.A.G 1526 to 20 V direct voltage
- Connect red test probe (+) to chamber 2 of 12-pin connector
- Connect black test probe (–) to chamber 4 of 12-pin connector
- Switch on ignition
- Front left (driver' side) electric window switch (E40), in switch position "close window"

No voltage present	Approx. battery voltage

No voltage present → Check wiring using Current flow diagram and/or renew front left (driver' side) electric window switch (E40)

Approx. battery voltage → **A**

satelettronica

A

Check voltage supply terminals 30 and 31 to front left electric window control unit (J295)	
– Set range selector switch of multimeter V.A.G 1526 to 20 V direct voltage – Connect red test probe (+) to chamber 10 of 12-pin connector – Connect black test probe (–) to chamber 5 of 12-pin connector	
No voltage present	Approx. battery voltage

Check wiring using Current flow diagram

Check voltage supply terminal 15 to front left electric window control unit (J295)	
– Set range selector switch of multimeter V.A.G 1526 to 20 V direct voltage – Connect red test probe (+) to chamber 7 of 12-pin connector – Connect black test probe (–) to chamber 5 of 12-pin connector – Switch on ignition	
No voltage present	Approx. battery voltage

Check wiring using Current flow diagram

Renew front left electric window control unit (J295)

END

satelettronica

Checking front passenger's side electric window

Check voltage supply terminals 30 and 31 to front right (driver's side) electric window switch (E81)

- Pull 10-pin connector T10p off front left electric window switch (E81)
- Connect red test probe (+) to chamber 5 of 10-pin connector T10p
- Connect black test probe (–) to chamber 6 of 10-pin connector T10p

No voltage present	Approx. battery voltage

No voltage present → Check wiring using Current flow diagram

Approx. battery voltage →

Check front right (driver's side) electric window switch (E81)

- Set range selector switch of multimeter V.A.G 1526 to 20 V direct voltage
- Attach 10-pin connector T10p to front right (driver' side) electric window switch (E81)
- Remove front passenger's door trim panel ⇒ General body repairs
- Pull 12-pin connector off front right electric window control unit (J296)
- Connect red test probe (+) to chamber 1 of 12-pin connector
- Connect black test probe (–) to chamber 4 of 12-pin connector
- Switch on ignition
- Front right (driver' side) electric window switch (E81), in switch position "open window"

No voltage present	Approx. battery voltage

No voltage present → Check wiring using Current flow diagram and/or renew front left (driver's side) electric window switch (E81)

Approx. battery voltage →

Check front right (driver's side) electric window switch (E81)

- Set range selector switch of multimeter V.A.G 1526 to 20 V direct voltage
- Connect red test probe (+) to chamber 2 of 12-pin connector
- Connect black test probe (–) to chamber 4 of 12-pin connector
- Switch on ignition
- Front left (driver' side) electric window switch (E81), in switch position "close window"

No voltage present	Approx. battery voltage

No voltage present → Check wiring using Current flow diagram and/or renew front left (driver' side) electric window switch (E81)

Approx. battery voltage → **A**

satelettronica

A

Check voltage supply terminals 30 and 31 to front right (front passenger's side) electric window switch (E41)

- Pull 5-pin connector T5k off front right electric window switch (E41)
- Connect red test probe (+) to chamber 1 of 5-pin connector T5k
- Connect black test probe (–) to chamber 5 of 5-pin connector T5k

No voltage present	Approx. battery voltage

No voltage present → Check wiring using Current flow diagram

Check front right (front passenger's side) electric window switch (E41)

- Set range selector switch of multimeter V.A.G 1526 to 20 V direct voltage
- Attach 5-pin connector T5k to front right (front passenger's side) electric window switch (E41)
- Connect red test probe (+) to chamber 3 of 12-pin connector
- Connect black test probe (–) to chamber 10 of 12-pin connector
- Switch on ignition
- Front right (front passenger's side) electric window switch (E41), in switch position "open window"

No voltage present	Approx. battery voltage

No voltage present → Check wiring using Current flow diagram and /or renew front right (driver's side) electric window switch (E41)

Check front right (front passenger's side) electric window switch (E41)

- Set range selector switch of multimeter V.A.G 1526 to 20 V direct voltage
- Connect red test probe (+) to chamber 3 of 12-pin connector
- Connect black test probe (–) to chamber 10 of 12-pin connector
- Switch on ignition
- Front right (front passenger's side) electric window switch (E41), in switch position "open window"

No voltage present	Approx. battery voltage

No voltage present → Check wiring using Current flow diagram and /or renew front right (driver's side) electric window switch (E41)

Check voltage supply terminals 30 and 31 to FR electric window control unit (J296)

- Set range selector switch of multimeter V.A.G 1526 to 20 V direct voltage
- Connect red test probe (+) to chamber 10 of 12-pin connector
- Connect black test probe (–) to chamber 5 of 12-pin connector

No voltage present	Approx. battery voltage

No voltage present → Check wiring using Current flow diagram

A

satelettronica

A

Check voltage supply terminal 15 to front right electric window control unit (J296)	
– Set range selector switch of multimeter V.A.G 1526 to 20 V direct voltage – Connect red test probe (+) to chamber 7 of 12-pin connector – Connect black test probe (–) to chamber 5 of 12-pin connector – Switch on ignition	
No voltage present	Approx. battery voltage
Check wiring using Current flow diagram	Renew front right electric window control unit (J296)

END

satelettronica

Checking alternator and voltage regulator with multimeter V.A.G. 1715

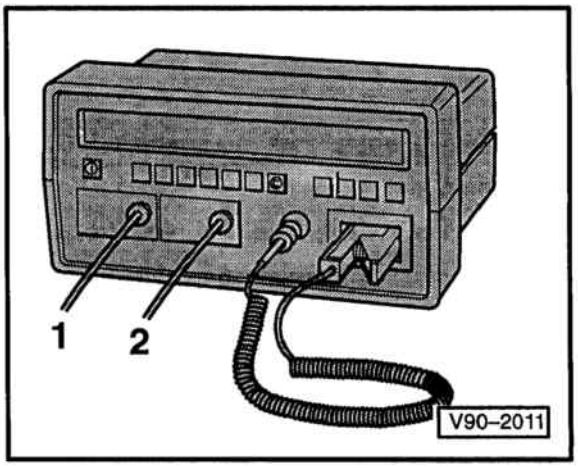

Contents

- Checking alternator and voltage regulator 28/2
- Alternator warning lamp glows dimly 28/3
- Alternator warning lamp does not go out 28/4

Alternator wiring harness:

An identification feature of these alternators is a two pole connector, see illustration.

DFM = Red/black wire diesel engines only
= Green wire petrol engines only

L = Blue wire all engines

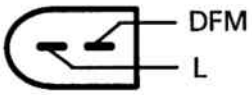

Note:

Important: Do not excite the alternator with an external source, this can cause the damage to the components of the alternator.

Test prerequisites:

- Battery OK!
- Both battery terminals checked for tightness!
- Battery earth strap OK!
- Fault memory interrogated!
- Ribbed belt tension OK!
- Alternator security OK!
- Fuse S162 (110 A) in fuse holder/battery OK!
- Fuse S163 (80 A) in fuse holder/battery OK!
- Fuse SB11 (5 A) in fuse holder OK!
- Fuse SB27 (5 A) in fuse holder OK!

Preparing for fault finding:

- Switch off ignition and all electrical consumers

satelettronica

Checking alternator and voltage regulator

The following is required for fault finding:

- Multimeter V.A.G 1715
- Adapter set V.A.G 1594 A

Checking alternator with multimeter V.A.G 1715

- Switch on multimeter
- Press button for alternator test (G)
- Connect black test probe (–) to battery earth strap
- Connect red test probe (+) to battery (+)
- Switch on electrical consumers in vehicle (headlight main beam, blower, heated rear window etc.)
- Start engine
- Allow engine to run at 1500 to 2000 rpm for a few seconds

If "Not OK" appears in display	If "OK" appears in display

Trial a replacement voltage regulator

Repeat test

"Not OK" appears in display

Renew alternator

Checking alternator output with multimeter V.A.G 1715

- Switch on multimeter
- Press button (A) for current strength
- Connect current clamp to B+ wire between alternator and battery
- Connect black test probe (–) to battery earth strap
- Connect red test probe (+) to battery +
- Switch on electrical consumers in vehicle (headlight main beam, blower, heated rear window etc.)
- Start engine
- Allow engine to run at 1500 to 2000 rpm for a few seconds
- Test result corresponds approx. to the nominal output on the alternator data plate

Test result not OK	Test result OK
Renew alternator	**Alternator is OK**

END

satelettronica

Alternator warning lamp glows dimly

The following is required for fault finding:

- Multimeter V.A.G 1715
- Adapter set V.A.G 1594 A

Checking current draw on L wire

- Pull two pole connector off alternator
- Extend L wire on connector (use adapter set V.A.G 1594 A)
- Connect red test probe (+) to extended L wire
- Connect black test probe (–) to L terminal on alternator
- Press button for current strength (mA)
- Switch on ignition
- Test result must be between 15mA and 300mA

Test result not OK	Test result OK

Test result not OK

↓

Black test probe to battery earth

Test result not OK

↓

Check L wire between alternator and dash panel insert using Current flow diagram

↓

Renew dash panel insert

Test result OK

↓

Renew voltage regulator

END

satelettronica

Alternator warning lamp does not go out

The following is required for fault finding:

- Ignition tester V.A.G 1767
- Adapter set V.A.G 1594 A

Checking wire between alternator and warning lamp (L wire)

- Pull two pole connector off alternator
- Switch on ignition

Warning lamp does not light	Warning lamp lights
Alternator or voltage regulator defective ⇒ Fault finding programme No 29/2	

- Switch off ignition
- Separate multi-pin connector T10d, red, in the relay station
- Switch on ignition

Warning lamp does not light	Warning lamp lights
Blue wire between alternator and T10d has short to earth. Check wiring using Current flow diagram	

Checking alternator exciter circuit (DFM wire)

- Switch off ignition
- Connect ignition tester V.A.G 1767
- Pull two pole connector off alternator
- Connect connector and two pole alternator connector using adapter cables from Adapter set V.A.G 1594 A ensure correctly connected (connector coding)
- Connect green plug from ignition tester V.A.G 1767 to DFM wire
- Connect earth wire from ignition tester V.A.G 1767 to battery (-)
- Operate duty cycle button
- Switch on ignition
- Duty cycle approx. 70 - 90% (switch off time)
- Start engine
- The duty cycle must reduce

Duty cycle not OK	Duty cycle OK
Renew voltage regulator	Wire from T10d to dash panel insert defective

END

satelettronica

Checking alternator with Diagnosis testing and information system VAS 5051

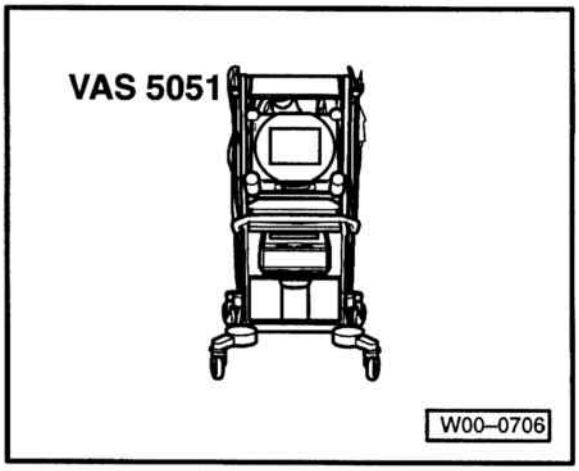

Contents

- Checking alternator and voltage regulator 29/2
- Figures 1, 2 and 3 ..... 29/3
- Alternator warning lamp glows dimly 29/4
- Alternator warning lamp does not go out 29/5
- Figures 4, 5 and 6 ..... 29/6

Alternator wiring harness:

An identification feature of these alternators is a two pole connector, see illustration.

DFM = Red/black wire diesel engines only
= Green wire petrol engines only

L = Blue wire all engines

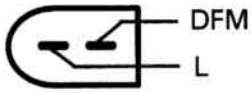

Note:

Important: Do not excite the alternator with an external source, this can cause the damage to the components of the alternator.

Test prerequisites:

- Battery OK!
- Both battery terminals checked for tightness!
- Battery earth strap OK!
- Fault memory interrogated!
- Ribbed belt tension OK!
- Alternator security OK!
- Fuse S162 (110 A) in fuse holder/battery OK!
- Fuse S163 (80 A) in fuse holder/battery OK!
- Fuse SB11 (5 A) in fuse holder OK!
- Fuse SB27 (5 A) in fuse holder OK!

Preparing for fault finding:

- Switch off ignition and all electrical consumers

satelettronica

Checking alternator and voltage regulator

The following is required for fault finding:

- Diagnosis testing and information system VAS 5051
- Adapter set V.A.G 1594 A

Checking alternator with Diagnosis testing and information system VAS 5051

- Switch off ignition
- Pull two pole connector off alternator
- Connect connector and two pole alternator connector using adapter cables from Adapter set V.A.G 1594 A ensure correctly connected (connector coding)
- Switch VAS 5051 on ⇒ system start mask appears in display
- Operate button "Test instruments" ⇒ test instruments mask appears in display
- Operate button "DSO" ⇒ DSO appears in display (Digital storage oscilloscope)
- Connect DSO (Digital storage oscilloscope) test cable 1 VAS 5051/8
- Connect red test lead (+) to L wire
- Connect black test lead (–) to battery earth
- Operate "Channel A" button ⇒ 0 Volt appears on display, see **fig. 1**
- Switch on ignition ⇒ 0.7 Volt appears on display, (diode throughput voltage), see **fig. 2**
- Change from 2 Volts to 5 Volts with arrow button
- Start engine ⇒ 14 Volts appears on display (slightly wavy line), see **fig. 3**

Test result not OK → Trial a replacement voltage regulator → Repeat test → Test result not OK → Renew alternator

Test result OK →

Checking alternator output with Diagnosis testing and information system VAS 5051

- Switch off ignition
- Operate multimeter button ⇒ test instruments mask appears in display
- Operate button "Current pick-up 500 A"
- Connect current pick-up clamp 500 A VAS 5051/19 to B+ wire between alternator and battery ⇒ arrow on current pick-up clamp must point towards the battery
- Switch on electrical consumers in vehicle (headlight main beam, blower, heated rear window etc.)
- Start engine
- Allow engine to run at 1500 to 2000 rpm for a few seconds
- Test result corresponds approx. the nominal output on the alternator data plate

Test result not OK → Renew alternator

Test result OK → Alternator is OK

END

satelettronica

Fig. 1

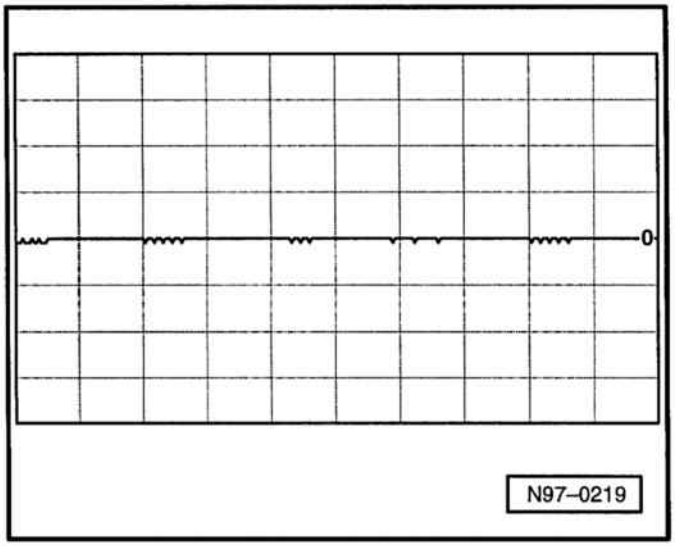

Fig. 2

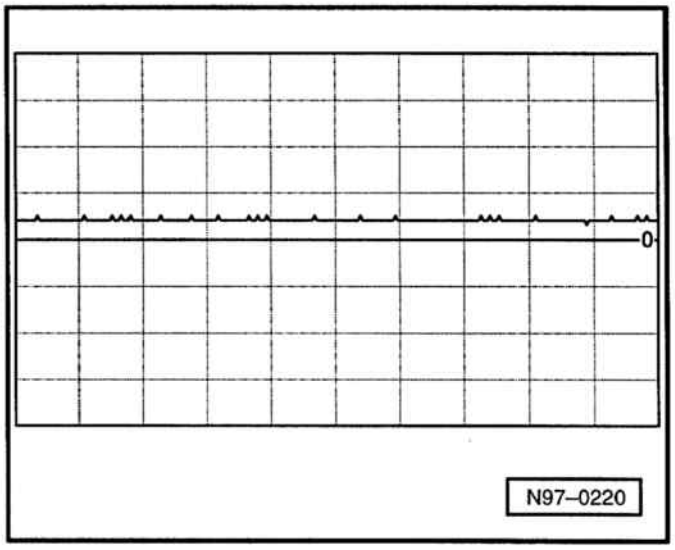

Fig. 3

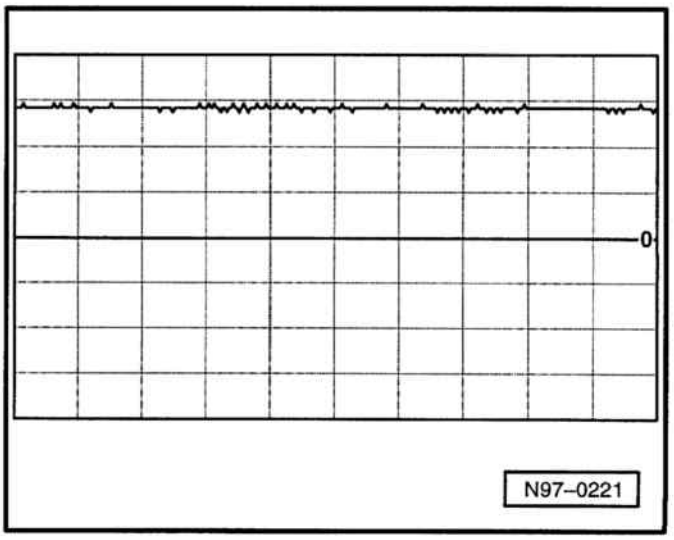

satelettronica

Alternator warning lamp glows dimly

The following is required for fault finding:

- Diagnosis testing and information system VAS 5051
- Adapter set V.A.G 1594 A

Checking current draw on L wire

- Pull two pole connector off alternator
- Extend L wire on connector (use adapter set V.A.G 1594 A)
- Switch VAS 5051 on ⇒ system start mask appears in display
- Operate button "Test instruments" ⇒ test instruments mask appears in display
- Reposition test cable VAS 5051/7 for inline current measurement to 10A
- Operate "Inline current" button
- Operate current strength (mA) button
- Connect red test probe (+) to extended L wire
- Connect black test probe (–) to L terminal on alternator
- Switch on ignition
- Test result must be between 15mA and 300mA

Test result not OK

↓

Black test probe to battery earth

Test result not OK

↓

Check L wire between alternator and dash panel insert using Current flow diagram

↓

Perform self-diagnosis of dash panel insert and interrogate fault memory. Check dash panel insert earth connections using Current flow diagram

↓

Renew dash panel insert if no fault can be found

Test result OK

↓

Renew voltage regulator

END

satelettronica

Alternator warning lamp does not go out

The following is required for fault finding:

- Diagnosis testing and information system VAS 5051
- Adapter set V.A.G 1594 A

Checking wire between alternator and warning lamp (L wire)

- Pull two pole connector off alternator
- Switch on ignition

Warning lamp does not light	Warning lamp lights
↓ Alternator or voltage regulator defective ⇒ Fault finding programme No 29/2	↓

- Switch off ignition
- Separate multi-pin connector T10d, red, in the relay station
- Switch on ignition

Warning lamp does not light	Warning lamp lights
↓ Blue wire between alternator and T10d has short to earth. Check wiring using Current flow diagram	↓

Checking alternator exciter circuit (DFM wire)

- Switch off ignition
- Pull two pole connector off alternator
- Connect connector and two pole alternator connector using adapter cables from Adapter set V.A.G 1594 A ensure correctly connected (connector coding)
- Switch VAS 5051 on ⇒ system start mask appears in display
- Operate button "Test instruments" ⇒ test instruments mask appears in display
- Operate button "DSO" ⇒ DSO appears in display (Digital storage oscilloscope)
- Connect DSO (Digital storage oscilloscope) test cable 1 VAS 5051/8
- Operate "Channel A" button ⇒ and preset to 5 Volts with arrow button
- Connect red test cable (+) to DFM wire
- Connect black test cable (-) to battery earth
- Switch on ignition ⇒ the duty cycle appears on the mask ⇒ switch on time approx. 25% of the switch off time, see **fig. 4**
- Start engine ⇒ the duty cycle must change, see **fig. 5**
- If current consumers are switched on the switch on time can increase to 100%, see **fig. 6**

Duty cycle not OK	Duty cycle OK
↓ Renew voltage regulator	↓ Wire from T10d to dash panel insert defective

END

satelettronica

Fig. 4

1 = Switch off time
2 = Switch on time

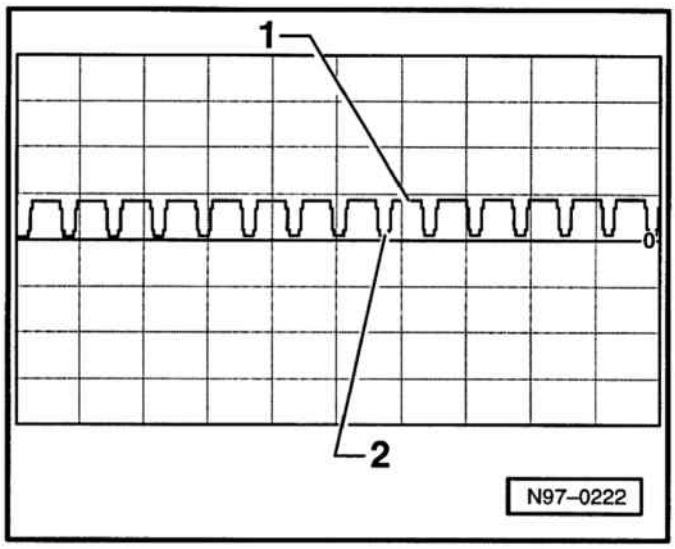

Fig. 5

1 = Switch off time
2 = Switch on time

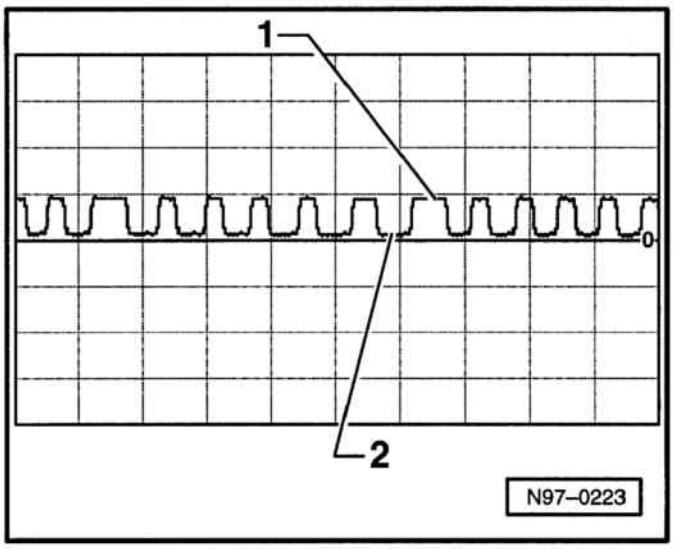

Fig. 6

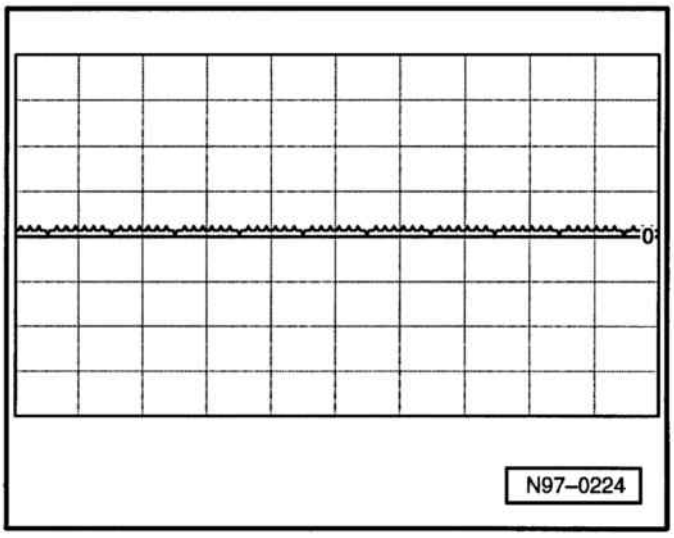

satelettronica

Checking headlight washer system

The following is required for fault finding:

- *Multimeter V.A.G 1526 or V.A.G 1526 A*
- *Adapter set V.A.G 1594 A*
- *Valid current flow diagram*

Always check the battery negative terminal for tightness before commencing fault finding.

Test prerequisites:

- Fuse SB47 (20 A) in fuse holder OK!
- Headlight dipped beam functions OK!
- Windscreen wipe and wash system functions OK!

Preparing for fault finding:

- Switch off ignition and all electrical consumers.
- Remove headlight washer system relay (J39), in front of engine compartment

After rectifying a fault perform a functional check of the headlight wiper/washer system

See next page for test table!

satelettronica

Checking voltage supply (terminal 30) for headlight washer system relay (J39)

- Set measuring range switch of multimeter V.A.G 1526 to 20 V =
- Connect red (+) test probe to chamber 8 of 8-pin relay socket for headlight washer system
- Connect black (–) test probe to chamber 6 of 8-pin relay socket for headlight washer system
- Switch on ignition

Voltage not OK	Voltage OK
Check positive and negative wiring using Current flow diagram	

Checking voltage supply (terminal 56b) for headlight washer system relay (J39) with headlight dipped beam switched on

- Set measuring range switch of multimeter V.A.G 1526 to 20 V =
- Connect red (+) test probe to chamber 5 of 8-pin relay socket for headlight washer system
- Connect black (–) test probe to chamber 6 of 8-pin relay socket for headlight washer system
- Switch on ignition
- Switch on dipped beam

Voltage not OK	Voltage OK
Check positive and negative wiring using Current flow diagram	

Checking voltage supply for headlight washer system pump (V11)

- Set measuring range switch of multimeter V.A.G 1526 to 20 V =
- Refit headlight washer system relay
- Pull 2-pin connector T2 off headlight washer system pump
- Connect red (+) test probe to chamber 2 of 2-pin connector T2 detached from headlight washer system pump
- Connect black (–) test probe to chamber 1 of 2-pin connector T2 detached from headlight washer system pump
- Switch on ignition
- Switch on headlight dipped beam
- Switch on windscreen wash/wipe system, hold switch and read off results on multimeter

Voltage OK	Voltage not OK
Renew headlight washer system pump (V11)	A

satelettronica

A

↓

Checking wiring from headlight washer system relay (J39) to automatic intermittent wipe/wash relay (J31)	
– Set measuring range switch of multimeter V.A.G 1526 to ⊣◀/♪ – Remove lower dash panel trim ⇒ General body repairs, Repair group 70 – Remove automatic intermittent wipe/wash relay – Remove headlight washer system relay – Connect red (+) test probe to chamber 4 of 8-pin relay socket for headlight washer system – Connect black (–) test probe to chamber 6 of 8-pin relay socket for automatic intermittent wipe/wash	
Signal does not sound	Signal sounds
↓	↓
Check wiring using Current flow diagram	Renew headlight washer system relay (J39)

END

satelettronica

Checking seat heating

Contents

- Checking driver's seat heating 31/2
- Checking front passenger's seat heating 31/6

The following is required for fault finding:

- *Hand multimeter V.A.G 1526 or V.A.G 1526 A*
- *Adapter set V.A.G 1594 A*
- *Valid Current flow diagram*

Always check battery negative terminal for tightness before starting fault finding.

Test prerequisites:

- Battery voltage is OK!
- Fuse SB51 (15 A) in fuse holder is OK!

Preparing for fault finding:

- Switch off ignition and all electrical consumers.
- Remove switch for electric seat heating ⇒ Electrical system, Repair group 96

Perform a functional check of the seat heating after rectifying a faults.

The fault finding programme begins on the next page!

satelettronica

Checking driver's seat heating

Checking voltage supply (terminal 15) for driver's heated seat regulator (E94)

- Set measuring range switch of multimeter V.A.G 1526 to 20 V =
- Remove driver's heated seat regulator ⇒ Electrical system, Repair group 96
- Pull 6-pin connector T6 off heated driver's seat regulator
- Connect red test probe (+) to chamber 5 and 4 (terminal 15) of detached 6-pin connector T6
- Connect black test probe (–) to body earth
- Switch on ignition

Voltage not OK	Voltage OK

Voltage not OK → Check wiring using current flow diagram

Voltage OK →

Checking driver's heated seat regulator (E94)

- Set measuring range switch of multimeter V.A.G 1526 to 20 V =
- Connect 6-pin connector T6 to driver's heated seat regulator
- Connect black test probe (-) to body earth
- Perform voltage test as per table:

Connect red test probe (+) to 6-pin connector T6 for heated driver's seat regulator:	Driver's heated seat regulator to switch position:	Test result:
Chamber 2	Seat heating at maximum	Display approx. battery voltage
Chamber 2	Seat heating off	No voltage indicated on display

Test result not OK	Test result OK

Test result not OK → Renew driver's heated seat regulator (E94)

Test result OK →

Checking illumination for driver's heated seat regulator (E94)

- Set measuring range switch of multimeter V.A.G 1526 to 20 V =
- Connect red test probe (+) to chamber 1/58b of 6-pin connector T6 for driver's heated seat regulator
- Connect black test probe (–) to chamber 6 of 6-pin connector T6 for driver's heated seat regulator
- Switch on lights, instrument lighting rheostat to fully bright

Display approx. battery voltage	Voltage not OK

Display approx. battery voltage → Renew driver's heated seat regulator (E94) → A

Voltage not OK → Check wiring using current flow diagram

satelettronica

A

Checking wiring from driver's heated seat regulator (E94) (terminal 2) to heated driver's seat control unit (J131) (terminal P)

- Set measuring range switch of multimeter V.A.G 1526 to ⊣⊢/♪
- Pull 6-pin connector T6 off the driver's heated seat regulator
- Pull 6-pin connector T6d off control unit for driver's heated seat
- Connect red test probe (+) to chamber 2 of detached 6-pin connector T6
- Connect black test probe (–) to chamber 4/P of 6-pin connector T6d detached from control unit for heated driver's seat

Signal does not sound	Signal sounds
Check wiring using current flow diagram	

Checking wiring from driver's heated seat regulator (E94) (terminal 3) to heated driver's seat control unit (J131) (terminal 86)

- Set measuring range switch of multimeter V.A.G 1526 to ⊣⊢/♪
- Pull 6-pin connector T6 off the driver's heated seat regulator
- Pull 6-pin connector T6d off control unit for driver's heated seat
- Connect red test probe (+) to chamber 3 of detached 6-pin connector T6
- Connect black test probe (–) to chamber 2/86 of 6-pin connector T6d detached from control unit for heated driver's seat

Signal does not sound	Signal sounds
Check wiring using current flow diagram	

Checking earth connection (31) for heated driver's seat control unit (J131)

- Set measuring range switch of multimeter V.A.G 1526 to ⊣⊢/♪
- Connect red test probe (+) to chambers 1 and 3 of 6-pin connector T6d for control unit for heated driver's seat
- Connect black test probe (–) to body earth

Signal sounds	Signal does not sound
Renew heated driver's seat control unit (J131)	Check positive and negative wiring using Current flow diagram

B

satelettronica

B

Checking heated driver's seat control unit (J131)

- Set measuring range switch of multimeter V.A.G 1526 to 20 V =
- Attach 6-pin connector T6d to control unit for heated driver's seat
- Connect red test probe (+) to chamber 5/T of 6-pin connector T6d for heated driver's seat control unit (J131)
- Connect black test probe (–) to chamber 1/31 of 6-pin connector T6d for heated driver's seat control unit (J131)
- Switch ignition on
- Switch heated driver's seat regulator to maximum heat

Voltage not OK	Voltage approx. battery voltage

Voltage not OK → Renew heated driver's seat control unit (J131)

Voltage approx. battery voltage →

Checking heater element for driver's heated seat cushion (Z6)

- Set measuring range switch of multimeter V.A.G 1526 to ⊣◄/♪
- Pull 6-pin connector T6l off driver's heated seat (under driver's seat)
- Connect red test probe (+) to chamber 4 of 6-pin connector T6l detached from driver's seat
- Connect black test probe (–) to chamber 3 of 6-pin connector T6l detached from driver's seat

Signal does not sound	Signal sounds

Signal does not sound → Renew driver's seat cushion heater element (Z6)

Signal sounds →

Checking heater element for driver's heated seat backrest (Z7)

- Set measuring range switch of multimeter V.A.G 1526 to ⊣◄/♪
- Connect red test probe (+) to chamber 2 of 6-pin connector T6l detached from driver's seat
- Connect black test probe (–) to chamber 1 of 6-pin connector T6l detached from driver's seat

Signal does not sound	Signal sounds

Signal does not sound → Renew driver's seat backrest heater element (Z7)

Signal sounds →

Checking wiring from heated driver's seat heater elements to vehicle earth

- Set multimeter V.A.G 1526 measuring range switch to ⊣◄/♪
- Connect red test probe (+) to chamber 1 of 6-pin connector T6l detached from driver's seat
- Connect black test probe (–) to body earth

Signal does not sound	Signal sounds

Signal does not sound → Check wiring using Current flow diagram

Signal sounds → C

satelettronica

C

↓

Checking wiring from driver's seat temperature sensor (G59) to driver's heated seat control unit (J131)	
– Set measuring range switch of multimeter V.A.G 1526 to ⊣⊢/♪ – Connect red test probe (+) to chamber 5 of detached 6-pin connector T6l – Connect black test probe (–) to chamber 5/T of 6-pin connector T6d detached from driver's heated seat control unit (J131)	
Signal does not sound	Signal sounds

↓ Check wiring using Current flow diagram

↓

Checking wiring from driver's seat temperature sensor (G59) to vehicle earth	
– Set measuring range switch of multimeter V.A.G 1526 to ⊣⊢/♪ – Connect red test probe (+) to chamber 6 of detached 6-pin connector T6l – Connect black test probe (–) to body earth	
Signal does not sound	Signal sounds

↓ Check wiring using Current flow diagram

↓ If the problem of regulating the heating is still present, then renew the heater element for the heated driver's seat cushion (Z6). (The temperature sensor in seat cushion cannot be checked)

END

satelettronica

Checking front passenger's seat heating

Checking voltage supply (terminal 15) for front passenger's heated seat regulator (E95)

- Set measuring range switch of multimeter V.A.G 1526 to 20 V =
- Remove front passenger's heated seat regulator ⇒ Electrical system, Repair group 96
- Pull 6-pin connector T6 off heated front passenger's seat regulator
- Connect red test probe (+) to chambers 4 and 5 (terminal 15) of detached 6-pin connector T6
- Connect black test probe (–) to body earth
- Switch on ignition

Voltage not OK	Voltage OK
↓ Check wiring using current flow diagram	↓

Checking front passenger's heated seat regulator (E95)

- Set measuring range switch of multimeter V.A.G 1526 to 20 V =
- Connect 6-pin connector T6 to heated front passenger's seat regulator
- Connect black test probe (-) to body earth
- Perform voltage test as per table:

Connect red test probe (+) to 6-pin connector T6 for front passenger's heated seat regulator	Front passenger's heated seat regulator in switch position	Test result:
Chamber 2	Seat heating at maximum	Display approx. battery voltage
Chamber 2	Seat heating off	No voltage indicated on display

Test result not OK	Test result OK
↓ Renew front passenger's heated seat regulator (E95)	↓

Checking illumination for front passenger's heated seat regulator (E95)

- Set measuring range switch of multimeter V.A.G 1526 to 20 V =
- Connect red test probe (+) to chamber 1/58b of 6-pin connector T6 for front passenger's heated seat regulator
- Connect black test probe (–) to chamber 6 of 6-pin connector T6 for front passenger's heated seat regulator
- Switch on lights, instrument lighting rheostat to fully bright

Display approx. battery voltage	Voltage not OK
↓ Renew front passenger's heated seat regulator (E95)	↓ Check wiring using Current flow diagram

↓

A

satelettronica

A

Checking wiring from front passenger's heated seat regulator (E95) (terminal 2) to heated front passenger's seat control unit (J132) (terminal P)

- Set measuring range switch of multimeter V.A.G 1526 to ⊣⊢/♪
- Pull 6-pin connector T6 off the front passenger's heated seat regulator
- Pull 6-pin connector T6e off control unit for front passenger's heated seat
- Connect red test probe (+) to chamber 2 of detached 6-pin connector T6
- Connect black test probe (–) to chamber 4/P of 6-pin connector T6e detached from control unit for heated front passenger's seat

Signal does not sound	Signal sounds
Check wiring using Current flow diagram	

Checking wiring from front passenger's heated seat regulator (E95) (terminal 1) to heated front passenger's seat control unit (J132) (terminal 86)

- Set measuring range switch of multimeter V.A.G 1526 to ⊣⊢/♪
- Pull 6-pin connector T6 off the front passenger's heated seat regulator
- Pull 6-pin connector T6e off control unit for front passenger's heated seat
- Connect red test probe (+) to chamber 3 of detached 6-pin connector T6
- Connect black test probe (–) to chamber 2/86 of 6-pin connector T6e detached from control unit for heated front passenger's seat

Signal does not sound	Signal sounds
Check wiring using Current flow diagram	

Checking earth connection (31) for heated front passenger's seat control unit (J132)

- Set measuring range switch of multimeter V.A.G 1526 to ⊣⊢/♪
- Connect red test probe (+) to chambers 1 and 3 of 6-pin connector T6e of control unit for heated front passenger's seat
- Connect black test probe (–) to body earth

Signal sounds	Signal does not sound
Renew heated front passenger's seat control unit (J132)	Check positive and negative wiring using Current flow diagram

B

satelettronica

B

Checking heated front passenger's seat control unit (J132)

- Set measuring range switch of multimeter V.A.G 1526 to 20 V =
- Attach 6-pin connector T6e to control unit for heated front passenger's seat
- Connect red test probe (+) to chamber 5/T of 6-pin connector T6e for heated front passenger's seat control unit (J131)
- Connect black test probe (–) to chamber 1/31 of 6-pin connector T6e for heated front passenger's seat control unit
- Switch on ignition
- Switch heated front passenger's seat regulator to maximum heat

Voltage not OK	Voltage approx. battery voltage

Voltage not OK → Renew heated front passenger's seat control unit (J132)

Voltage approx. battery voltage →

Checking heater element for front passenger's heated seat cushion (Z8)

- Set measuring range switch of multimeter V.A.G 1526 to ⊣◄/♪
- Pull 6-pin connector T6m off front passenger's heated seat (under front passenger's seat)
- Connect red test probe (+) to chamber 4 of detached 6-pin connector T6m
- Connect black test probe (–) to chamber 3 of detached 6-pin connector T6m

Signal does not sound	Signal sounds

Signal does not sound → Renew heater element for front passenger's seat cushion (Z8)

Signal sounds →

Checking heater element for front passenger's heated seat backrest (Z9)

- Set measuring range switch of multimeter V.A.G 1526 to ⊣◄/♪
- Connect red test probe (+) to chamber 2 of detached 6-pin connector T6m
- Connect black test probe (–) to chamber 1 of detached 6-pin connector T6m

Signal does not sound	Signal sounds

Signal does not sound → Renew heater element for front passenger's seat backrest (Z9)

Signal sounds →

Checking wiring from heated front passenger's seat heater elements to vehicle earth

- Set measuring range switch of multimeter V.A.G 1526 to ⊣◄/♪
- Connect red test probe (+) to chamber 1 of detached 6-pin connector T6m
- Connect black test probe (–) to body earth

Signal does not sound	Signal sounds

Signal does not sound → Check wiring using Current flow diagram

Signal sounds → C

satelettronica

C

Checking wiring from front passenger's seat temperature sensor (G60) to front passenger's heated seat control unit (J132)	
– Set measuring range switch of multimeter V.A.G 1526 to ⊣⊢/♪ – Connect red test probe (+) to chamber 5 of detached 6-pin connector T6m – Connect black test probe (–) to chamber 5/T of 6-pin connector T6e detached from front passenger's heated seat control unit	
Signal does not sound	Signal sounds

Check wiring using Current flow diagram

Checking wiring from front passenger's seat temperature sensor (G60) to vehicle earth	
– Set measuring range switch of multimeter V.A.G 1526 to ⊣⊢/♪ – Connect red test probe (+) to chamber 6 of detached 6-pin connector T6m – Connect black test probe (–) to body earth	
Signal does not sound	Signal sounds

Check wiring using Current flow diagram

If the problem of regulating the heating is still present, then renew the heater element for the heated front passenger's seat cushion (Z8). (The temperature sensor in seat cushion cannot be checked)

END

satelettronica